Standards: IEC947, EN60947
Ambient temperature: −40 °C to +60 °C

Type of controller			VCS0	VNS0 NNS0	VNS2	VNS2B	Dead man push button or turn switch in handle
Voltage (Ue) in V			250	400	600	600	250
Current (Ie) in A							
	AC12 (ohmic) 50–60 Hz		10	16	25	--	4
	AC15 (inductive) 50–60 Hz		4	6	10	--	3
	DC12 (ohmic)	12 V	4	8	14	25	2
		24 – 42 V	1,7	1,7	2,6	16	1,6
		115 – 230 V	0,3	0,3	0,45	8	0,3
	DC13 (inductive)	24 – 42 V	0,8	1,1	2	10	1,1
		115 – 230 V	0,2	0,2	0,28	2	0,2
	DC12 (ohmic) with gold contact 30 V			4 mA	4 mA	--	4 mA
Short circuit	switch fuse		6	10	16	16	--
	fuse		6	10	16	16	--
Mechanical lifetime mio. cycles			10	20	10	10	--
Connections:							
	Screw		M3,5	M3,5	M5	M5	M3,5
	Wire profile		1,5 mm^2	1,5 mm^2	6 mm^2	6 mm^2	--
	With gold contacts	connection	--	soldered			
		wire profile	--	0,5 mm^2			

Cycles in Mio

Lifetime with AG contacts
AC15 (inductive load 230 V)

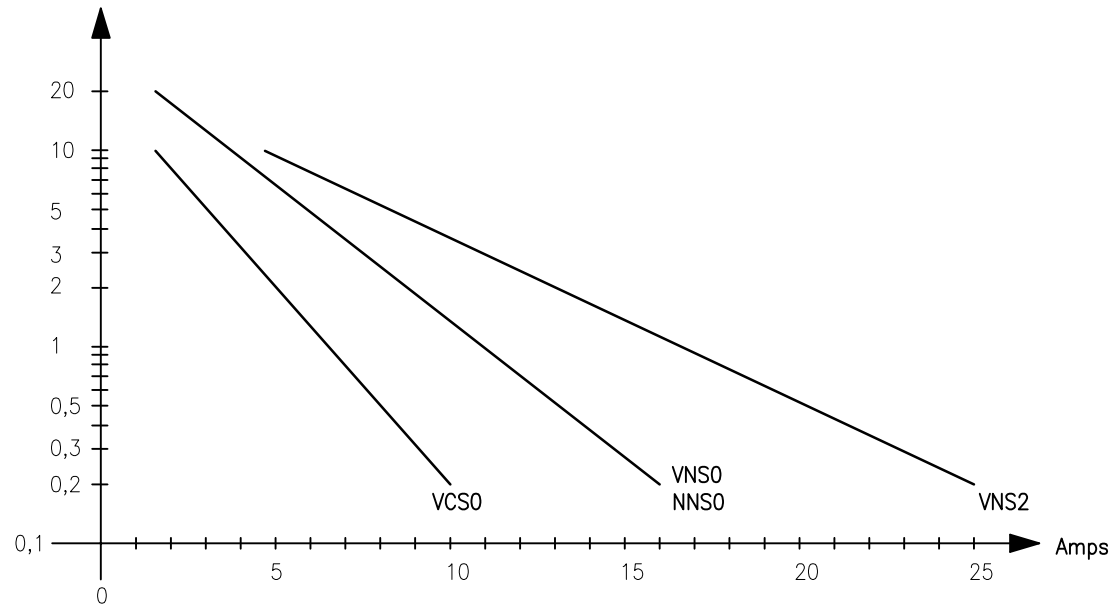

Spohn+Burkhardt
Elektrotechnische Fabrik Blaubeuren

Mauergasse 5
89143 BLAUBEUREN
GERMANY

Tel. +49 7344 171-0 info@spobu.de
Fax +49 7344 171-99 www.spobu.de

Prices EUR

Type of controller		Deadman contact	Push button (white) free IP32	Push button (white) IP65	Push button (white) sunk	Contact by lifting	0 I Stay put	0 I Spring return
M0				HD				
				HDO				
				HDU				
VCS0		T	H	HD	HDV	TYS	DS	DSR
		TO	HO	HDO	HDVO	TYO	DO	DOR
		TU	HU	HDU	HDVU	TYU	DSO	DSOR
		TSS	HSS	HDSS	HDVSS	TYSS		
		TOO	HOO	HDOO	HDVOO	TYOO		
VNS0– E V G H M		T	H	HD	HDV	TYS	DS	DSR
		TO	HO	HDO	HDVO	TYO	DO	DOR
		TU	HU	HDU	HDVU	TYU	DSO	DSOR
		TSS	HSS	HDSS	HDVSS	TYSS	DSS	DSSR
		TOO	HOO	HDOO	HDVOO	TYOO	DOO	DOOR
VNS0– A EA		TU	HU	HDU	HDVU	TYU	DSO	DSOR

Additional rotation, see handle G13 sheet 3/10.

Spohn+Burkhardt
Elektrotechnische Fabrik Blaubeuren

Mauergasse 5
89143 BLAUBEUREN
GERMANY

Tel. +49 7344 171-0 info@spobu.de
Fax +49 7344 171-99 www.spobu.de

Prices EUR

Type of controller		Mechanical unlock by lifting		with contact by push button			Mechanical unlock by pushing down grip, only possible in combination with slot or cross gate.	
		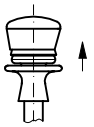 without contact	with contact			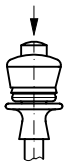	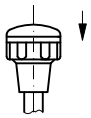 without contact	 with contact
M0		Z	HDZ					
VCS0		Z	ZS	HDSZ	HDVSZ	HDFSZ	IZ	IZS
			Z0	HD0Z	HDV0Z	HDF0Z		IZ0
			ZU	HDUZ	HDVUZ	HDFUZ		IZU
			ZSS	HDSSZ	HDVSSZ	HDFSSZ		IZSS
			Z00	HD00Z	HDV00Z	HDF00Z		IZ00
VNS0– E V G H M		Z	ZS	HDSZ	HDVSZ	HDFSZ	IZ	IZS
			Z0	HD0Z	HDV0Z	HDF0Z		IZ0
			ZU	HDUZ	HDVUZ	HDFUZ		IZU
			ZSS	HDSSZ	HDVSSZ	HDFSSZ		IZSS
			Z00	HD00Z	HDV00Z	HDF00Z		IZ00
VNS0– A EA		Z	ZU	HDUZ	HDVUZ	HDFUZ	IZ	IZU

Spohn+Burkhardt
Elektrotechnische Fabrik Blaubeuren

Mauergasse 5
89143 BLAUBEUREN
GERMANY

Tel. +49 7344 171-0 info@spobu.de
Fax +49 7344 171-99 www.spobu.de

Prices EUR

Controller	Contact	Dead-man contact	Push button (white) free IP32	Push button (white) IP65	Push button (white) sunk	Contact by lifting
VNS2-E V G H M		T	H	HD	HDV	TYS
		TO	HO	HDO	HDVO	TYO
		TU	HU	HDU	HDVU	TYU
		TSS	HSS	HDSS	HDVSS	TYSS
		TOO	HOO	HDOO	HDVOO	TYOO
VNS2-A EA AA		TU	HU	HDU	HDVU	TYU

Controller	Contact	Mechanical unlock by lifting: without contact	Mechanical unlock by lifting: with contact by lifting	Mechanical unlock by lifting with contact by push button: without contact by lifting			mechanical release by pushing down ball grip feasible for circular movements: without contact	mechanical release by pushing down ball grip feasible for circular movements: with contact by pushing down
VNS2-E V G H M		Z					IKZ	
			ZS	HDSZ	HDVSZ	HDFSZ		IKZU
			ZO	HDOZ	HDVOZ	HDFOZ		
			ZU	HDUZ	HDVUZ	HDFUZ		
			ZSS	HDSSZ	HDVSSZ	HDFSSZ		
			ZOO	HDOOZ	HDVOOZ	HDFOOZ		
VNS2-A EA AA		Z					IKZ	
			ZU	HDUZ	HDVUZ	HDFUZ		IKZU

Spohn + Burkhardt
Elektrotechnische Fabrik Blaubeuren

Mauergasse 5
89143 BLAUBEUREN
GERMANY

Tel. +49 7344 171-0 info@spobu.de
Fax +49 7344 171-99 www.spobu.de

Additionals in handle NNS0

List 7 / 2014
2/1C

Prices EUR

	Dead-man contact	Push button (white) free	Push button (white)	Push button (white) sunk	
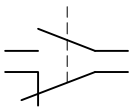	TU	HU	HDU	HDVU	

	Mechanical unlock by lifting without contact	Mechanical unlock by lifting with contact by push button			Contact by lifting
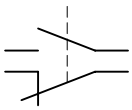	Z / ZU	HDUZ	HDVUZ	HDFUZ	TYU

Spohn+Burkhardt
Elektrotechnische Fabrik Blaubeuren

Mauergasse 5
89143 BLAUBEUREN
GERMANY

Tel. +49 7344 171-0 info@spobu.de
Fax +49 7344 171-99 www.spobu.de

List 7 / 2014 2/2A	Control devices, type RMQ–Titan Moeller ø22,5 mm, other functions on request	List 7 / 2014 2/2A

Device	Plate	Contacts	Type	EUR incl. fittings
push– button IP67	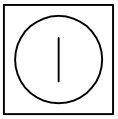 green		M22–D–G–X1/K10	
			M22–D–G–X1/K11	
	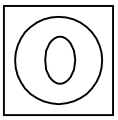 red		M22–D–R–X0/K01	
			M22–D–R–X0/K11	
	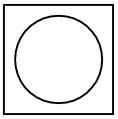 green black white blue yellow red		M22–D–G/K10 M22–D–S/K10 M22–D–W/K10 M22–D–B/K10 M22–D–Y/K10 M22–D–R/K10	
			M22–D–G/K11 M22–D–S/K11 M22–D–W/K11 M22–D–B/K11 M22–D–Y/K11 M22–D–R/K11	
	Features	Symbol		
lamp with LED IP67	U_B = 12–30 VAC/DC I_B = 8–15 mA 0,26 W at 24 V	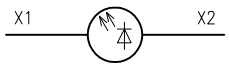	M22–L–_ –LED–_ colour lens colour LED	
	U_B = 42–60 VAC/DC	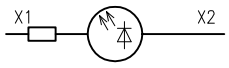	M22–L–_ –XLED60–_ colour lens colour LED	
	U_B = 85–264 VAC 50/60 Hz I_B = 5–15 mA, 0,33 W	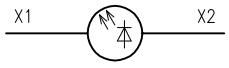	M22–L–_ –LED230–_ colour lens colour LED	
illuminated push button IP67	U_B = 18–30 VAC/DC I_B = 8–15 mA 0,26 W at 24 V	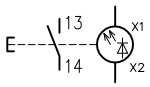	M22–DL–_ –LED–_ /K10 colour lens colour LED M22–DL–_ –LED–_ /K11 colour lens colour LED	
	U_B = 42–60 VAC/DC	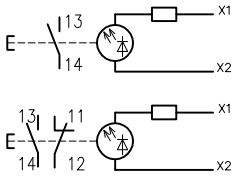	M22–DL–_ –XLED60–_ /K10 colour lens colour LED M22–DL–_ –XLED60–_ /K11 colour lens colour LED	
	U_B = 85–264 VAC 50/60 Hz I_B = 5–15 mA, 0,33 W	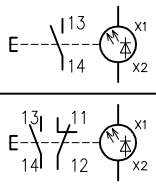	M22–DL–_ –LED230–_/K10 colour lens colour LED M22–DL–_ –LED230–_/K11 colour lens colour LED	

colour lens	only in combination with	colour LED
R (red)	⟷	R (red)
G (green)	⟷	G (green)
W (white)	⟷	W (white)
Y (yellow)	⟷	W (white)
B (blue)	⟷	W (white) / B (blue)

Spohn + Burkhardt
Elektrotechnische Fabrik Blaubeuren
Mauergasse 5
89143 BLAUBEUREN
GERMANY
Tel. +49 7344 171-0 info@spobu.de
Fax +49 7344 171-99 www.spobu.de

List 7 / 2014 2/2B	Control devices, type Moeller ø22,5 mm (other functions on request)				List 7 / 2014 2/2B
Device	**Contacts**	**Symbol**	**Type**		**EUR** incl. fittings
selector switch (stayput or spring return) IP66 RQM–Titan	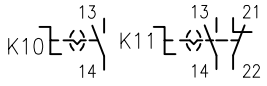		stayput (60°) M22–WKV/K10 M22–WKV/K11	spring return (40°)	
	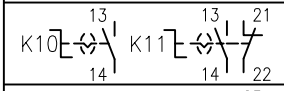		M22–WRK/K10 M22–WRK/K11	M22–WK/K10 M22–WK/K11	
	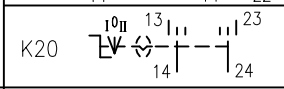		M22–WRK3/K20	M22–WK3/K20	
selector switch stayput IP65	3–steps 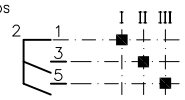		Fabr. Moeller TM–2–8230/EZ		
	4–steps 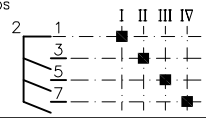	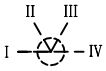	Fabr. Moeller TM–2–8231/EZ		
key selector switch IP66 RMQ–Titan	**keytype MS1**	**key to remove in position 0 I**	**stayput (60°)**	**spring return (40°)**	
	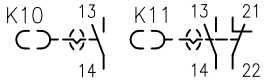	 X X	M22–WRS/K10 M22–WRS/K11		
	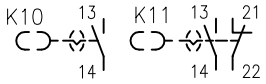	 X	M22–WRS–A1/K10 M22–WRS–A1/K11	M22–WS/K10 M22–WS/K11	
	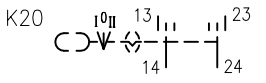	 X	M22–WRS3–A1/K20	M22–WS3/K20	
off emergency		push to latch IP65	Q25PV–E01–SRA01 drilling ø16,2 mm		
		push to latch IP66	M22–PV/K01		
	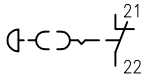	push to latch	M22–PVS/K01		
buzzer IP40		18–30 VDC 83dB/10 cm 100%	M22–AMC–XAM M22–AMC–XAMP	unmodulated signal pulsed signal	
buzzer IP40		48 VDC drilling ø30,5 mm	Funke & Huster EKSP 48 VAC/DC		
push button IP67	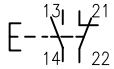	head black head red	FAK–S/KC11/I FAK–R/KC11/I		
blind cap			M22S–B		
labelholder			M22–ST–X (for label 18x27 mm)		

Spohn+Burkhardt
Elektrotechnische Fabrik Blaubeuren
Mauergasse 5
89143 BLAUBEUREN
GERMANY
Tel. +49 7344 171-0 info@spobu.de
Fax +49 7344 171-99 www.spobu.de

1. Trolley/Slewing

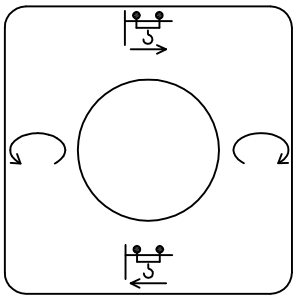

2. Hoist/Travelling

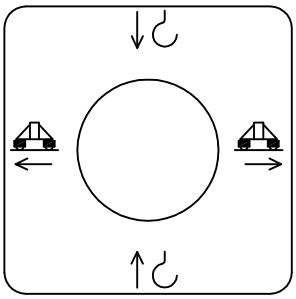

3. Jib/Slewing

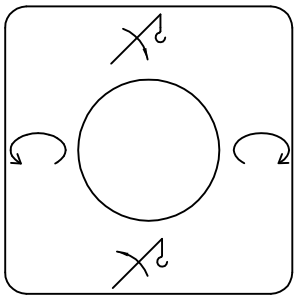

4. Hoist/Grab

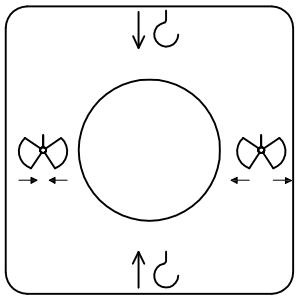

5. Hoist

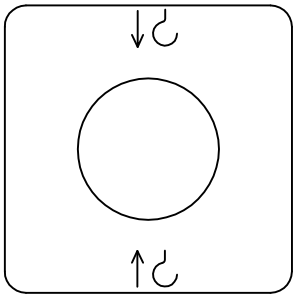

6.	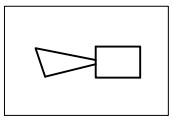	Horn	12.	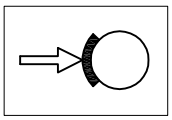	Brake on
7.	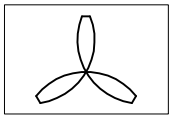	Ventilator	13.	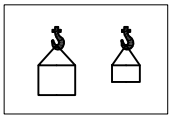	Lifting large, small
8.	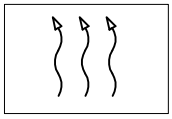	Interior heating	14.	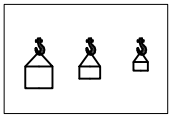	Lifting large, medium, small
9.	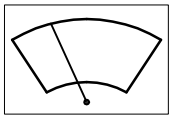	Windscreen wiper	15.	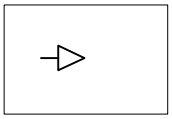	Normal run
10.	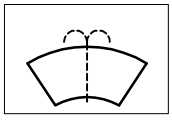	Windscreen washer	16.	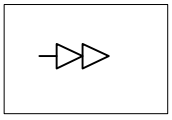	Fast run
11.	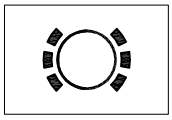	Brake lining wear	17.	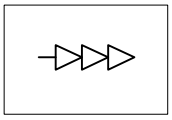	Fast speed

Spohn+Burkhardt
Elektrotechnische Fabrik Blaubeuren

Mauergasse 5
89143 BLAUBEUREN
GERMANY

Tel. +49 7344 171-0 info@spobu.de
Fax +49 7344 171-99 www.spobu.de

Description

The sensor ESS080 composed of sensor plate ESS080K... and analysing electronic ESS080A is working according to the capacitive principle. If you approach the hand to the sensor plate, the relay (clamp 10, 11, 12) will switch. This distance is in the scope of some millimeters which is adjustable.

Sensor plate ESS080K at standard handle NS0 ES41/42CR:

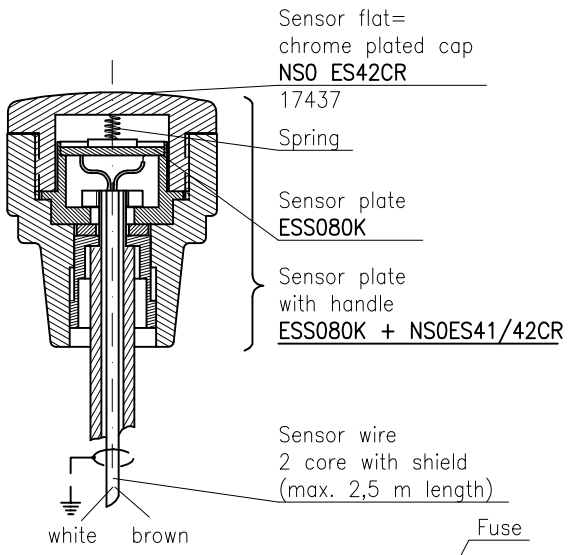

Notes:

* Wire break secure
* Operation pilot lamps
* high sensitivity
* Potential free relay output with high current output
* fast connecting with 12 pin clamp

Technical data:

Supply Voltage:	24 VDC ±20%	
Wire length:	max. 2,5 m	
Switching capacity:	250 VAC 6 A	
relay:	24 VDC 2A	
Temp. range:	–20 °C bis +70 °C	
Input current:	ca. 50 mA	
Dimensions:	105x80x25 mm	
Weight:	110 g	
Protection:	IP 20	
Fuse:	315 mAT	
EMC:	ESD	IEC801–2
	Burst	IEC801–4
	Surge	IEC801–5
	Spurious rodiation	EN 55022, EN 55011
	interference rejection	EN 61000–4–3 (level 3)
	interference rejection	EN 61000–4–6 (level 3)

Analysing electronic ESS080A:

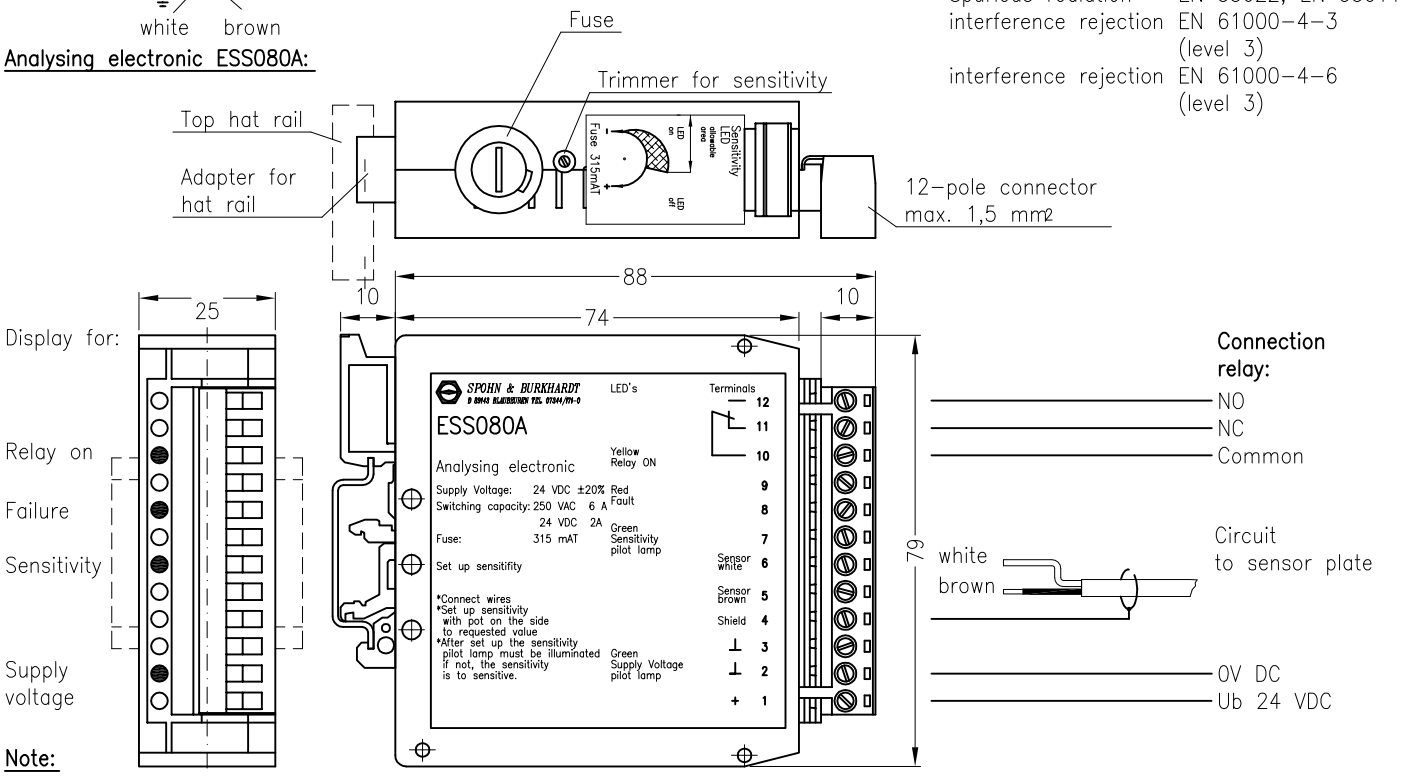

Note:

Operator has to observe requirements of data sheets.
The capacitive sensor is not allowed for critical safety applications.

Adjustment instruction:

* Connect ESS080A and ESS080K–...
* Supply voltage
* Adjust requested sensitivity with trimmer and at the same time control it with LED .
  When LED is illuminating at requested sensitivity, adjustment is ok, if not: sensor adjustment is in prohibited range because sensitivity is too high.
  Correction in order to establish save function: Diminuish with trimmer the sensitivity until LED is illuminating.

		Spobu Id.–Nr.	EUR
Sensor plate round	ESS080K	12869	
Sensor plate squared	ESS080K–1	17844	
Sensor plate for handle	ESS080K–UG/–UGN/–UGD		
Sensor plate with standard handle	ESS080K–NS0ES41/42CR	19769	
Sensor plate with ball handle (sensitivity on the side and below)	NS2ES98–1KT	20517	
Analysing electronic	ESS080A	12958	

Spohn + Burkhardt
Elektrotechnische Fabrik Blaubeuren

Mauergasse 5
89143 BLAUBEUREN
GERMANY

Tel. +49 7344 171-0 info@spobu.de
Fax +49 7344 171-99 www.spobu.de

IP32 Inserts: min 5 VDC–1mA max. 24 VAC/DC–2A ind.

Handle G22:


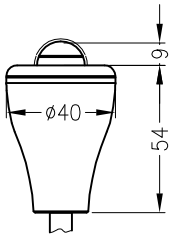

G22–8–FS–WH–RBF


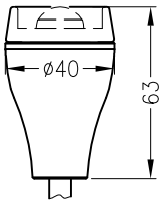

G22V–8–FS–WH–RBF


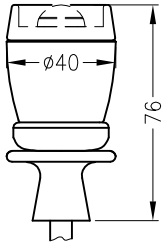

G22ZV–8–FS–WH–RBF

Ordering example:

G22	–	8	–	FS	–	WH	–	RBF		
G22H		12		HS		BK		RBH		
G22V				FOS		GN				
G22Z				HOS		RD				
G22ZH						BU				
G22ZV						WH				
						GY				
						VT				

Type
ø shaft
Push button
Push button colour
Protection cap

	EUR
Handle without inserts	G22_– 8 / G22_–12
Handle without inserts, mechanical interlock in centre	G22Z_– 8 / G22Z_–12
Push button, flat or high, 1 NO coloured cap, wired with single leads, 0,5 m long, AWG24 feed cable: brown, outgoing line: colour according to coloured cap	FS, HS
Push button, flat or high, 1 NO 1NC, coloured cap wired with single leads, 0,5 m long, AWG24	FOS, HOS
Protection cap for flat push buttons	RBF
Protection cap fo high push buttons	RBH

Handle G21:


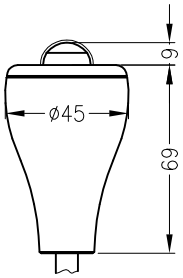


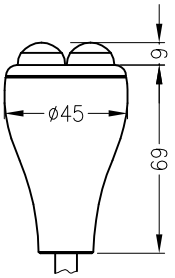


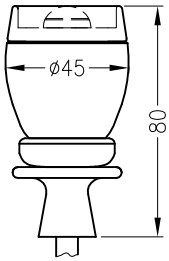

Ordering example:

G21	–	8	–	FS	–	WH	–	RBF	–	FS	–	WH	–	RBF	
G21H		12		HS		BK		RBH		HS		BK		RBH	
G21V				FOS		GN				FOS		GN			
G21Z				HOS		RD				HOS		RD			
G21ZH						BU						BU			
G21ZV						WH						WH			
						GY						GY			
						VT						VT			

Type
ø shaft
Push button – right
Push button colour – right
Protection cap – right

	EUR
Handle without inserts	G21_– 8 / G21_–12
Handle without inserts, mechanical interlock in centre	G21Z_– 8 / G21Z_–12
Push button, flat or high, 1 NO coloured cap, wired with single leads, 0,5 m long, AWG24 feed cable: brown, outgoing line: colour according to coloured cap	FS, HS
Push button, flat or high, 1 NO 1NC, coloured cap wired with single leads, 0,5 m long, AWG24	FOS, HOS
Protection cap for flat push buttons	RBF
Protection cap fo high push buttons	RBH

Spohn+Burkhardt
Elektrotechnische Fabrik Blaubeuren

Mauergasse 5
89143 BLAUBEUREN
GERMANY

Tel. +49 7344 171-0 info@spobu.de
Fax +49 7344 171-99 www.spobu.de

IP32 Inserts: min. 5 VDC–1mA max. 24 VAC/DC–2A ind.

Handle G27:



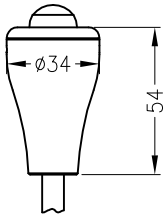

G27–8–FS–WH–RBF



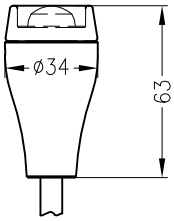

G27V–8–FS–WH–RBF

Ordering example:

G27 G27H G27V	–	8	–	FS HS FOS HOS	–	WH BK GN RD BU WH GY VT	–	RBF RBH

Type
ø shaft
Push button
Push button colour
Protection cap

	EUR
Handle without inserts	G27_– 8
Push button, flat or high, 1 NO coloured cap, wired with single leads, 0,5 m long, AWG24 feed cable: brown, outgoing line: colour according to coloured cap	FS, HS
Push button, flat or high, 1 NO 1NC, coloured cap wired with single leads, 0,5 m long, AWG24	FOS, HOS
Protection cap for flat push buttons	RBF
Protection cap fo high push buttons	RBH

Spohn+Burkhardt
Elektrotechnische Fabrik Blaubeuren

Mauergasse 5
89143 BLAUBEUREN
GERMANY

Tel. +49 7344 171-0 info@spobu.de
Fax +49 7344 171-99 www.spobu.de

Universal handles UG, UGN

Dimensions see sheet M 3/3

List 7 / 2014
3/3



Positionen:

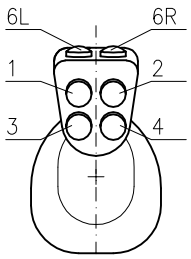

UG



Positionen:

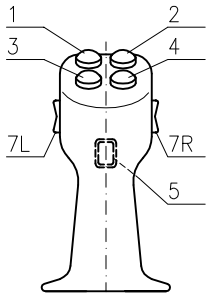

UGN

Handles form	Universal handle without fittings with	Type	EUR
	adapter UG 009 for controller ST0, ST1 CS1, VCS0, VNS0 adapter UG009–NS2 for controller NS3, NNS0, VNS(B)2 special adapter on request	UG–8 UG–12 UG–S	 on request
	adapter UG 009 for controller ST0, ST1 CS1, VCS0, VNS0 adapter UG009–NS2 for controller NS3, NNS0, VNS(B)2 special adapter on request	UGN–8 *) UGN–12 *) UGN–S	 on request

Fittings	Contact material	Possible installation positions	Type	Color of pressure cap	EUR
Push button 1NO flat " 1NO 1NC flat Push button 1NO high " 1NO 1NC high	silver plated silver contacts 24 VDC–max. 2 A 48 VAC–max. 0,5 A	1, 2, 3, 4, 6L, 6R, 7L, 7R 1, 2, 3, 4, 6L, 6R, 7L, 7R 1, 2, 3, 4, 6L, 6R, 7L, 7R 1, 2, 3, 4, 6L, 6R, 7L, 7R	P9F–color P9FOS–color P9H–color P9HOS–color	GN–green, RD–red WH–white, YE–yellow BU–blue, GY–grey VT–violet, OG–orange BK–black	
Push button 1 change over Push button 1 change over Push button 1 NO Push button 1 NO	silver contact gold plated silver cont. silver contact gold plated silver cont.	5 at UG 5 at UG 5 at UGN 5 at UGN	T GT T GT	black black black black	
Kapacitive sensor–system	Relais with 1 changer, silver contacts	5 5	KT–UG KT–UGN		see sheet 3/1
Rocker switch 1–0–1 Rocker switch 1–0–1 Rocker switch 1–0–1 Rocker switch 0–1 Rocker switch 0–1	silver contacts, by 1–0–1: ON–OFF–ON by 0–1: ON–ON	1+3, 2+4, 7L, 7R 1+3, 2+4, 7L, 7R 1+3, 2+4, 7L, 7R 1+3, 2+4, 7L, 7R 1+3, 2+4, 7L, 7R	W2T W2S W2TS W1T W1S	black engraved on request	
Rocker switch 1–0–1	gold plated silver contact by 1–0–1: ON–OFF–ON	1+3, 2+4, 7L, 7R	GW2T	black engraved on request	
Rubber boot for plate V048K3 or V048–100–A1		at UG at UGN	V041N–UG V041N–UGN		

Ordering example:

8
UG – 12 – 1BK – 2+4W2T – 5GT
UGN S

Type
Adapter
Pos. 1: push button, 1NO, flat, black
Pos. 2+4 rocker switch, 1–0–1, ON–OFF–ON, black
Pos. 5: push button, gold plated contact

Note:

- Assembling onto SPOBU controller with lever 110 mm
- Installation possibilities see M 3/3
- Due to space not all positions are realisable at the same time
- Type of protection dependend on installations

*) We recommend for SPOBU–controller to use holder V048–100–A1 for UGN–handle (see M 3/3)

Spohn + Burkhardt
Elektrotechnische Fabrik Blaubeuren

Mauergasse 5
89143 BLAUBEUREN
GERMANY

Tel. +49 7344 171-0 info@spobu.de
Fax +49 7344 171-99 www.spobu.de

Universal handle UGD

Dimensions see sheet M 3/3A

List 7 / 2014
3/3A



UGD

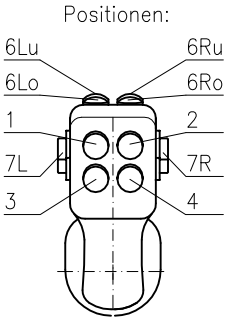



UGD–G10

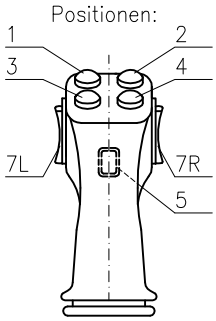



UGD–G12A

Handles form	Universal handle without fittings with	Type	EUR
	adapter UGD06 for controller ST0, ST1 CS1, VCS0, VNS0 adapter UGD06–NS2 for controller NS3, NNS0, VNS(B)2 special adapter on request	UGD–8 UGD–12 UGD–S	 on request

Fittings	Contact material	Possible installation positions	Type	Color of pressure cap	EUR
Push button 1NO flat " 1NO 1NC flat Push button 1NO high " 1NO 1NC high	silver plated silver contacts 24 VDC–max. 2 A 48 VAC–max. 0,5 A	1, 2, 3, 4, 6L, 6R, 7L, 7R 1, 2, 3, 4, 6L, 6R, 7L, 7R 1, 2, 3, 4, 6L, 6R, 7L, 7R 1, 2, 3, 4, 6L, 6R, 7L, 7R	P9F–color P9FOS–color P9H–color P9HOS–color	GN–green, RD–red WH–white, YE–yellow BU–blue, GY–grey VT–violet, OG–orange BK–black	
Push button 1 change over Push button 1 change over	silver contact gold plated silver cont.	5 5	T GT	black black	
Kapacitive sensor–system	Relais with 1 changer, silver contacts	5	KT–UGD		see sheet 3/1
Rocker switch 1–0–1 Rocker switch 1–0–1 Rocker switch 1–0–1 Rocker switch 0–1 Rocker switch 0–1	silver contacts, by 1–0–1: ON–OFF–ON by 0–1: ON–ON	1+3, 2+4, 7L, 7R 1+3, 2+4, 7L, 7R 1+3, 2+4, 7L, 7R 1+3, 2+4, 7L, 7R 1+3, 2+4, 7L, 7R	W2T W2S W2TS W1T W1S	black engraved on request	
Rocker switch 1–0–1	gold plated silver contact by 1–0–1: ON–OFF–ON	1+3, 2+4, 7L, 7R	GW2T	black engraved on request	
Rubber boot for plate V048K3			V041N–UGD		
Twist poti with direction contacts and spring return	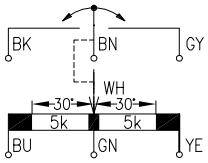	1+2+3+4	G10–GDLR55		
Analog rocker switch with HALL–sensor	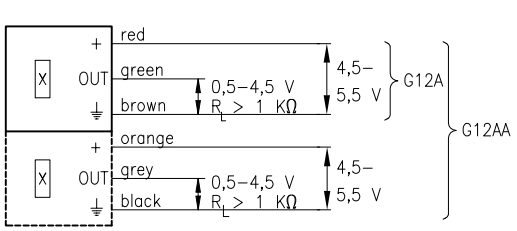		G12A G12AA	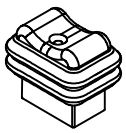	

Ordering example:

8
UGD – 12 – 1BK –2+4W2T – 5GT
S

Type
Adapter
Pos. 1: push button, 1NO, flat, black
Pos. 2+4 rocker switch, 1–0–1, ON–OFF–ON, black
Pos. 5: push button, gold plated contact

Note:

- Assembling onto SPOBU controller with lever 110 mm
- Installation possibilities see M 3/3A
- Due to space not all positions are realisable at the same time
- Type of protection dependend on installations

Spohn + Burkhardt
Elektrotechnische Fabrik Blaubeuren

Mauergasse 5
89143 BLAUBEUREN
GERMANY

Tel. +49 7344 171-0 info@spobu.de
Fax +49 7344 171-99 www.spobu.de

Universal handle UGA

List 7 / 2014
3/3B


UGA


UGA


UGA–RL


UGA–RL


UGAR–HL


UGAL–HR

Arrangement	Description handle	Type	EUR
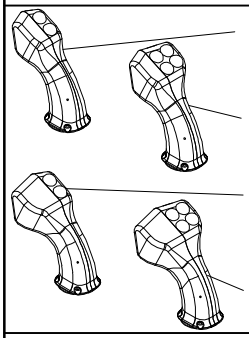	Handle small with fixing parts for ST0, CS1, VCS0, VNS0, NNS0, VNS2, NS3	UGA	
	Handle right wide, left small with fixing parts for ST0, CS1, VCS0, VNS0, NNS0, VNS2, NS3	UGAR	
	Handle right small, left wide with fixing parts for ST0, CS1, VCS0, VNS0, NNS0, VNS2, NS3	UGAL	
	Handle right and left wide with fixing parts for ST0, CS1, VCS0, VNS0, NNS0, VNS2, NS3	UGARL	
Position*	**Additionals**		
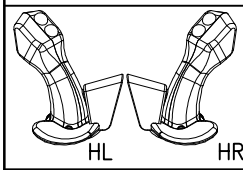 HL HR	Hand–rest, right hand side, height adjustable (2 steps) can be mounted later on	HR	
	Hand–rest, left hand side, height adjustable (2 steps) can be mounted later on	HL	
1, 2, 3, 4, 6R, 6L, 7R, 7L 8, 9, 10, 11	Push–button: 1NO, contact ratings: 48 VAC–500 mA, 24 VDC–2 A Colour: green, yellow, white, red, black, blue, orange, grey, violett short cut: GN YE WH RD BK BU OG GY VT	1..,2..,3..,4..,6R.., 6L..,7R..,7L..,8..,9.., (...colour)	
5	Deadman : 1NO, contact ratings: 24 VDC–2 A Sensor deadman see page 3/1	T KT	see sheet 3/1
7R, 7L	Rockerswitch stayput 0–1 Rockerswitch stayput 1–0–1 Rockerswitch with spring return 0–1 Rockerswitch with spring return 1–0–1 Rockerswitch one side spring return, one side stay put 1–0–1	W1S W2S W1T W2T W2TS	
Z	Handle, twistable version, with potentiometer and direction contacts Potentiometer see sheet 14/3	DP–GDLR55	
	Handle, twistable version 1–0–1, each direction 1NC1NO	DM	

Ordering example:

Type: UGA / UGAL / UGAR / UGARL

8 / 12 — Adapter for 8 mm ST0, VCS0, CS1, VNS0; Adapter for 12 mm NNS0, VNS2, NS3

HL / HR — Hand rest

2RD — Push button in position 2 red

5T — Deadman

DP / DM — Twistable version

Other fixing parts on request

Spohn+Burkhardt
Elektrotechnische Fabrik Blaubeuren

Mauergasse 5
89143 BLAUBEUREN
GERMANY

Tel. +49 7344 171-0 info@spobu.de
Fax +49 7344 171-99 www.spobu.de

List 7 / 2014 3/3C	Universal handle UGC Dimensions see sheet M 3/3C	List 7 / 2014 3/3C



UGCL



UGCR



UGCR



UGCL

Arrangement	Description handle	Type	EUR
UGCL UGCR 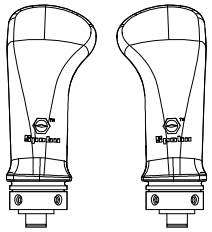	Handle right with fixing parts UGA-02 for ST0, CS1, VCS0, VNS0, NNS0, VNS2, NS3	UGCR	
	Handle left with fixing parts UGA-02 for ST0, CS1, VCS0, VNS0, NNS0, VNS2, NS3	UGCL	
Position*	**Additionals**		
	Push-button: 1NO, contact ratings: 48 VAC-500 mA, 24 VDC-2 A Colour: green, yellow, white, red, black, blue, orange, grey, violett short cut: GN YE WH RD BK BU OG GY VT	1..,2..,3..,4..,6R.., 6L..,7R..,7L..,8..,9.., 10..,11.. (...colour)	
5	Deadman : 1NO, contact ratings: 24 VDC-2 A Sensor deadman see page 3/1	T KT	see sheet 3/1
	Rockerswitch stayput 0-1 Rockerswitch stayput 1-0-1 Rockerswitch with spring return 0-1 Rockerswitch with spring return 1-0-1 Rockerswitch one side spring return, one side stay put 1-0-1	W1S W2S W1T W2T W2TS	
Z	Handle, twistable version, with potentiometer and direction contacts Potentiometer see sheet 14/3 Additional price for mechanical direction contacts	DP-GDLR55	
	Handle, twistable version, with analogue hall-sensor Handle, twistable v., with analogue hall-sensor and direction contacts Handle, twistable v., with analogue hall-sensor in redundant version		
	Handle, twistable version 1-0-1	DM	

<u>Ordering example:</u> UGCL 8 5T DP
UGCR 12 2RD

Type

Twistable version

Deadman

Push button in position 2 red

Adapter for 8 mm ST0, VCS0, CS1, VNS0
Adapter for 12 mm NNS0, VNS2, NS3

Amplifier for hall-sensors,
see sheet 16/...
Other fixing parts on request

Spohn+Burkhardt
Elektrotechnische Fabrik Blaubeuren
Mauergasse 5
89143 BLAUBEUREN
GERMANY
Tel. +49 7344 171-0 info@spobu.de
Fax +49 7344 171-99 www.spobu.de

Multiplexer–system ESS097
for controller with handle UG, UGN, UGD

List 7 / 2014
3/4C

Application: Transmission of max. 12 signals with a shielded twin wire cable through shaft.

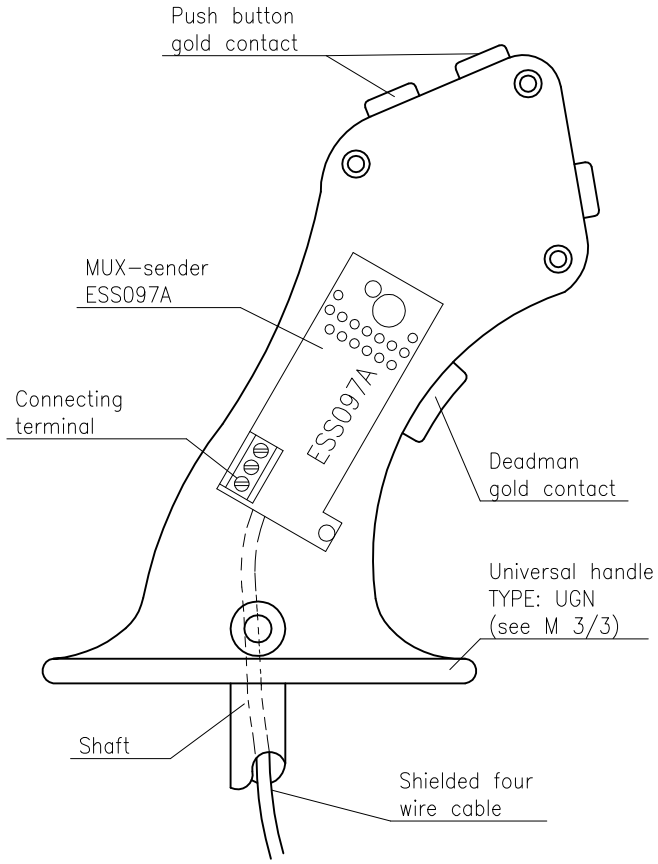

Explanation:

Mux–system (ESS097) contains of sender (ESS097A),
12 inputs and receiver (ESS097, per output
1 relay with 1 change–over contact)
Sender is scanning permanently over 12 push button positions
and is transmitting data serially by shielded twin wire cable
to receiver whereby data are emitted, free of potential, by relays.

Features:

Mux–system is for serial transmission of non–security relevant state.

* HF–filter on each input
* Non–bounce contacts
* Double transmission with parity–bit
* Data comparison with demultiplexer
* Block transmission with defined addresses
* Defined sequence with plausibility control
* Switch off in case of transmission error
* Watchdog to control processors
* Supply voltage with reverse and EMC protection
* Delay 50 ms transmission

Technical data:

Supply voltage:	19,2... 28,8 VDC
Supply current:	400 mA, all inputs low
Temp.–range:	–40 °C till +70 °C
Capacity:	5 A at 250 V–50 HZ 2 A at 30 VDC

Scheme multiplexer–system:

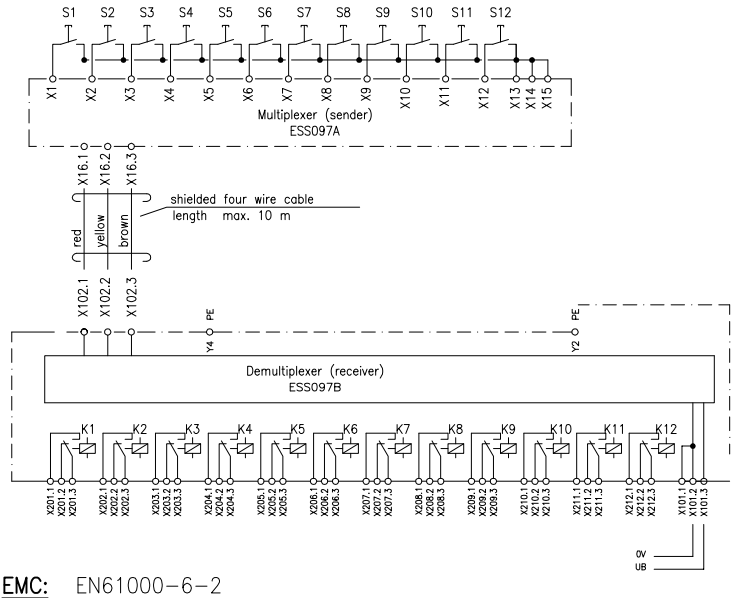

Diagnostics:

LED display	Meaning	colour
RDY–LED (V107)	–Is lighting when demultiplexer is ready for operation –Is blinking when transm. error	green
Output 1...12 (V201...V212)	–Is lighting when output active	yellow

Sender:

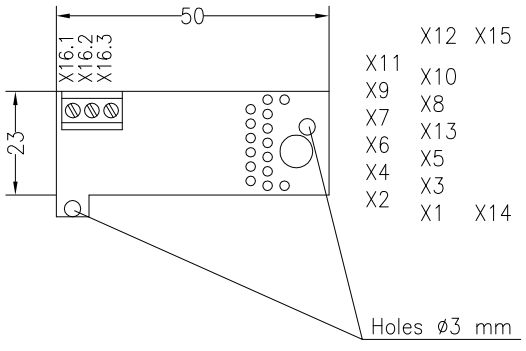

EMC: EN61000–6–2
EN55011:1998+A1:1999

Price:

MUX–system ESS097 EUR

Prices for handles see sheet 3/3

Spohn + Burkhardt
Elektrotechnische Fabrik Blaubeuren

Mauergasse 5
89143 BLAUBEUREN
GERMANY

Tel. +49 7344 171-0 info@spobu.de
Fax +49 7344 171-99 www.spobu.de

Palm–handle B, B1N,

List 7 / 2014
3/5

Palm handles for mountings on SPOBU–controllers with lever ø 8 mm.
On request other adapters available for different controllers.
Rubber boots see sheet E1/1.



Material PA6
Handle black
Protection IP54
Wiring:
single wires 0,5 m

Photo:
Type: BNS



Material PA6
Handle black
Protection IP54
Wiring:
single wires 0,5 m

Photo:
Type: B1NSWD

Palm handle with	Contacts		Type	EUR		Type	EUR
Without push buttons		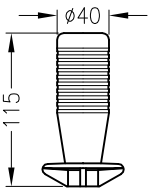	BNS		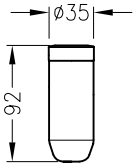	B1NS	
Rocker switch, 1–0–1, 1 changer DC13 24 V 3A		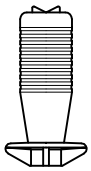	BNSW		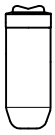	B1NSW	
Rocker switch, 1–0–1, 1 changer DC13 24 V 3 A push button in front 1NO DC13 24 V 2 A		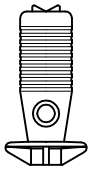	BNSWD		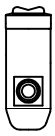	B1NSWD	
Push button free, on top 1NO DC13 24 V 2 A		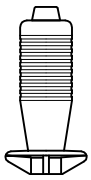	BNSD		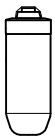	B1NSD	
Push button in front 1NO DC13 24 V 2 A		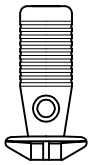	BNSVD		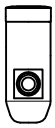	B1NSVD	
Push button free, on top 1NO DC13 24 V 2 A push button in front 1NO DC13 24 V 2 A	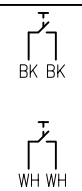	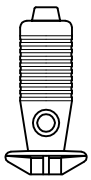	BNSDD		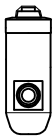	B1NSDD	
Push button flush mounted, on top 1NO DC13 24 V 2 A		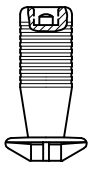	BNSDV				
Push button on top 1NO AC15 250 V 0,5 A (Activating of contact element by flexible shaft in lever), only for VNS0–controller with length 180 mm		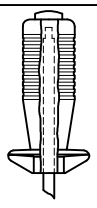	BNSH		Hand rest 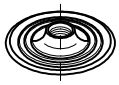	B1–04A	

Spohn+Burkhardt
Elektrotechnische Fabrik Blaubeuren

Mauergasse 5
89143 BLAUBEUREN
GERMANY

Tel. +49 7344 171-0 info@spobu.de
Fax +49 7344 171-99 www.spobu.de

Palm handles G9, G25 for master controller

List 7 / 2014
3/5A

G9
with maximal 1 pushbutton



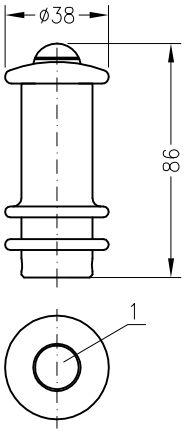

Version

G9–8
G9–12

Basic price without fittings EUR

G9–04
with maximal 4 pushbuttons



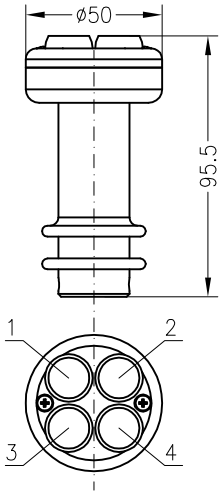

G9–04–8
G9–04–12

G25
with maximal 6 pushbuttons



Photo:
G25

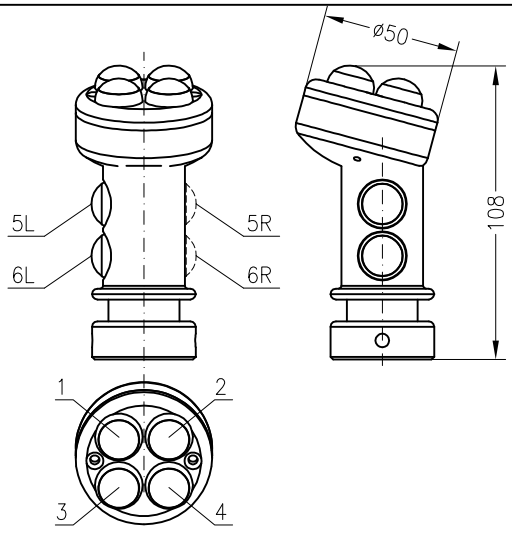

G25–8
G25–12

Additional price:

	EUR		Spobu Id.–Nr.	EUR
Pushbutton P9F (1NO)		Leather boot V041L–CS1/72	14331	
Pushbutton P9FOS (1NO1NC)		Rubber boot V041K–G9	25488	

Ordering example:

G9										
G9–04	–	8	–	1WH	–	2BK	–	3RD	–	4BU
G25		12								

Type
ø shaft d = 8 mm or 12 mm
Pushbutton

Spohn+Burkhardt
Elektrotechnische Fabrik Blaubeuren

Mauergasse 5
89143 BLAUBEUREN
GERMANY

Tel. +49 7344 171-0 info@spobu.de
Fax +49 7344 171-99 www.spobu.de

Handle G1 for controllers

List 7 / 2014
3/6



Photo:
G1–DTL

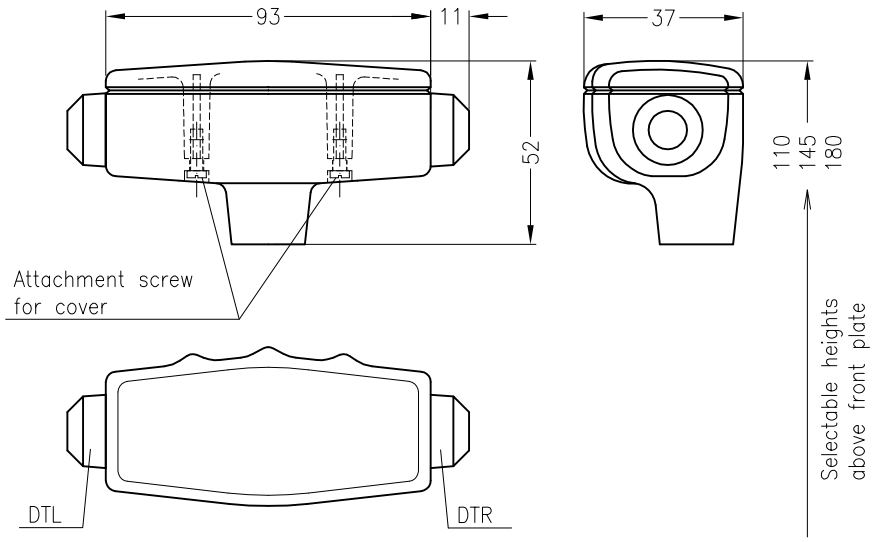

Technical data:
Material handle: PA6
Pushbutton P9F...: 30 VDC / 2 A
Cable through shaft (maximal 4x 0,25 qmm)

Version	Type	Inserts	EUR
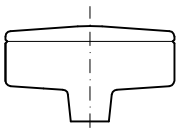	G1..	without	
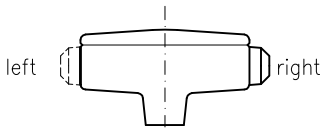	G1..DTR G1..DTROS G1..DTL G1..DTLOS	Pushbutton right side 1NO Pushbutton right side 1NO1NC Pushbutton left side 1NO Pushbutton left side 1NO1NC	
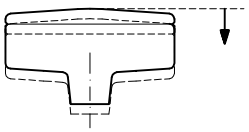	G1..TU	Deadman 1NO1NC operates while pressing down with flexible rod and contacts in base, possible for VCS0, VNS0, NNS0 and VNS2 controller	
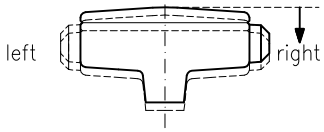	G1..TUDTR G1..TUDTROS G1..TUDTL G1..TUDTLOS	Deadman 1NO1NC operates while pressing down and pushbutton 1NO and 1NO1NC respectively on the right or on the left side	
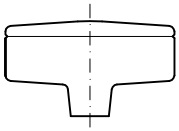	G1..KT	Capacitive sensor consisting of sensor plate ESS080K–1 and analysing electronic ESS080A	
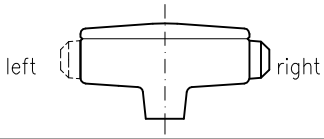	G1..KTDTR G1..KTDTROS G1..KTDTL G1..KTDTLOS	Capacitive sensor consisting of sensor plate ESS080K–1 and analysing electronic ESS080A, pushbutton 1NO and 1NO1NC respectively on the right or on the left side	

Ordering example:



On request:
* adapter custom–built
* other versions of push button

Spohn+Burkhardt
Elektrotechnische Fabrik Blaubeuren

Mauergasse 5
89143 BLAUBEUREN
GERMANY

Tel. +49 7344 171-0 info@spobu.de
Fax +49 7344 171-99 www.spobu.de

Version:	for controller type		Handle	EUR
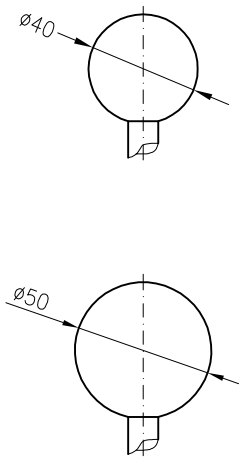 	VNS0 VCS0 CS1 ST0 ST1		KG40	
			KG50–8	
		VNS2 NS3 NNS0	KG50–12	
 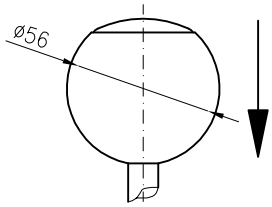 Function: mechanical release by pushing down ball grip and shaft only feasible with slot– or cross gate 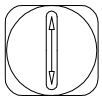 	VNS0–SKA VNS0–SKE VNS0–SKG VNS0–KKV VNS0–KKEA VNS0–KKH	VNS2–SKA VNS2–SKE VNS2–SKG VNS2–KKV VNS2–KKEA VNS2–KKH	IKKZ	
		NNS0–SKA NNS0–SKE NNS0–SKG NNS0–KKV NNS0–KKEA NNS0–KKH	IKKZU with electrical contacts 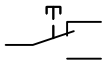	
 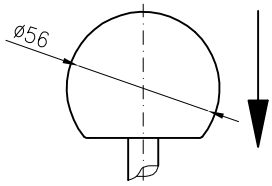 Function: mechanical release by pushing down ball grip feasible for circular movements 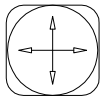	VNS0–V VNS0–EA VNS0–H	VNS2–V VNS2–EA VNS2–H	IKZ	
		NNS0–V NNS0–EA NNS0–H	IKZU with electrical contacts 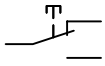	
 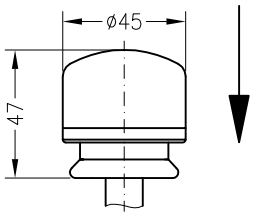 Function: mechanical release by pushing down handles.	VNS0 VCS0		IPZ	
			IPZU with electrical contacts 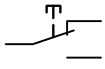	

Spohn+Burkhardt
Elektrotechnische Fabrik Blaubeuren

Mauergasse 5
89143 BLAUBEUREN
GERMANY

Tel. +49 7344 171-0 info@spobu.de
Fax +49 7344 171-99 www.spobu.de

Special handle G2 for controller
ST0, ST1, VCS0, CS1, VNS0, NNS0, VNS2, NS3

List 7 / 2014
3/8



Photo:
G2–LoBK

Without inserts:

Type G2–...

EUR

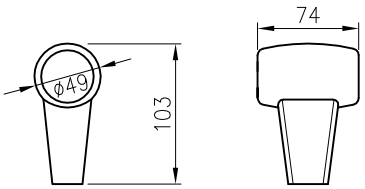

With inserts:

Type G2–...–...

Basic price:

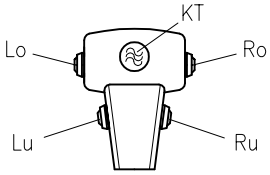

Lo/Lu/Ro/Ru = position of push buttons.
KT = capacitive–sensor–deadman

Additional price:

Inserts:
Push button, high version, black, 1NO, with silicon cap
Push button, high version, black, 1NO1NC, with silicon cap
More push buttons see sheet 3/12

Sensor head plate ESS080K–G2
(integrated in G2–handle)

Evaluation electronic ESS080A.
(is necessary for the evaluation of ESS080K–G2)
Further information for the capacitive–sensor–deadman see sheet 3/1

Ordering example:

	G2	8 / 12	KT	RoGN
Type				
Adapter: 8 mm = ST0, ST1, VCS0, CS1, VNS0				
Adapter: 12 mm = NNS0, VNS2, NS3				
Capacitive sensor deadman				
Push button right up, green, 1S				

Note:

Handle may be mounted in 90° rotated.
Handle protection IP54

High push button 1 NO is standard.
In case of order please give colour of button.
More information about different versions see sheet 3/12.
All push buttons wired, cable length 0,5 m, teflon lead AWG24.
Supply line brown (standard = combined with all inserted buttons),
cable of button accordingly to button colour.

Spohn+Burkhardt
Elektrotechnische Fabrik Blaubeuren

Mauergasse 5
89143 BLAUBEUREN
GERMANY

Tel. +49 7344 171-0 info@spobu.de
Fax +49 7344 171-99 www.spobu.de



Photo:
G4T–WT

Protection: IP54

Contacts:
Rocker switch 24 VDC/5 A
Deadman 24 VDC/2 A
Push button 24 VDC/2 A

Note:
In order to connect the potentiometer it is essential to consider the information of sheet 14/3

Standard:
With 0,5 m Teflon single cores AWG24, adapter for controller with 8 mm SPOBU shaft
ST0, ST1, VCS0, CS1, VNS0

Additional price: EUR
Deadman 1NO1NC
Push button 1NO1NC
Special adapter on request on request

Version:	Equipment	Type	EUR
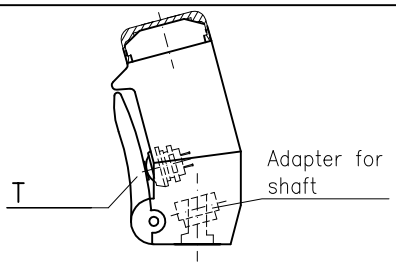	Deadman contact T 	G4T	
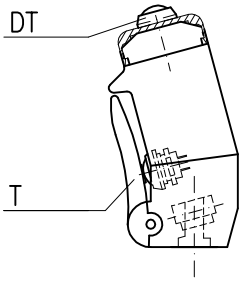	Push button DT  and deadman contact T 	G4T–DT	
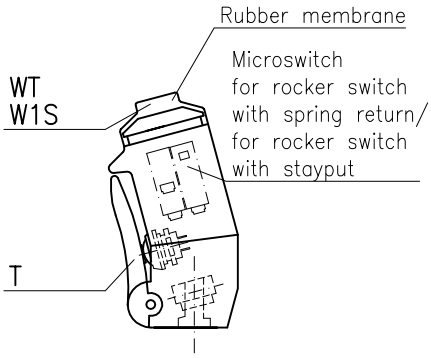	Rocker switch 1–0–1 with spring return WT  and deadman contact T 	G4T–WT	
	Rocker switch with stay put 0–1 W1S 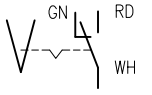 and deadman contact T 	G4T–W1S	
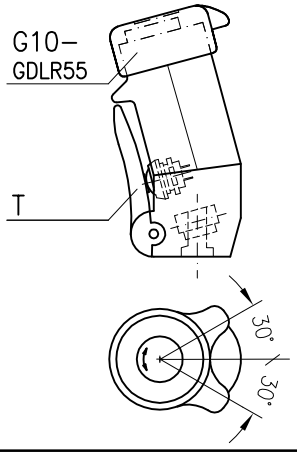	Rotary potentiometer with spring return to centre 5K–0–5KOhm and direction contacts. Wiper and contact load see sheet 14/3 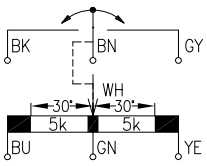 and deadman contact T 	G4T–G10–GDLR55	

Spohn+Burkhardt
Elektrotechnische Fabrik Blaubeuren

Mauergasse 5
89143 BLAUBEUREN
GERMANY

Tel. +49 7344 171-0 info@spobu.de
Fax +49 7344 171-99 www.spobu.de

T-handle G13, rotary for controller

List 7 / 2014
3/10



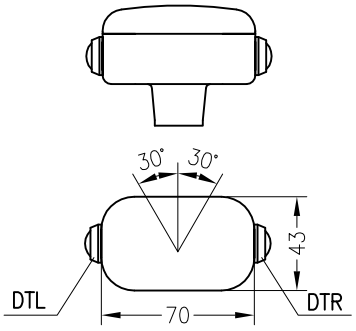

Protection category: IP54

Contacts:
AC 12: 24 V 2 A
AC 15: 24 V 0,5 A
DC 12: 24 V 2 A
DC 13: 24 V 0,5 A

Wiring: single conductors AWG24 L=0,5 m

Form	Description	Type	EUR
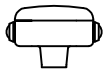	T-handle without fittings, black, PA6 with adapter for ST0, ST1, CS1, VCS0, VNS0 with adapter for NS3, NNS0, VNS2	 G13-8 G13-12	

Fittings	Description / circuit diagram		Extras	Add. price EUR
Rotary switch Spring return button	S1L (1 step to the left) S1R (1 step to the right) 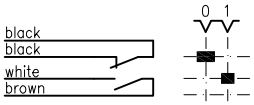	T1L (1 step to the left) T1R (1 step to the right) 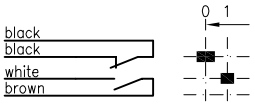	S1L S1R T1L T1R	
	S2L (2 steps to the left) S2R (2 steps to the right) 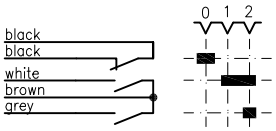	T2L (2 steps to the left) T2R (2 steps to the right) 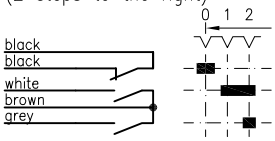	S2L S2R T2L T2R	
	S11 (1-0-1 steps) 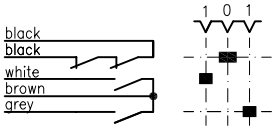	T11 (1-0-1 steps) 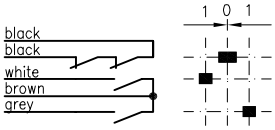	S11 T11	
	S22 (2-0-2 steps) 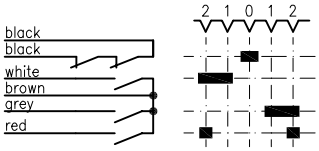	T22 (2-0-2 steps) 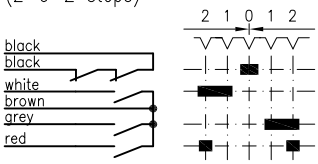	S22 T22	
Rotary motion 30°-30° with output analogue based on hall-sensors	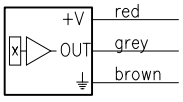	UB: 12 VDC Output: 4-12-20 mA (Links-Mitte-Rechts) RL: < 100Ω Ambient temp.: -40 °C bis +85 °C, EMI: DIN EN 55011 DIN EN 61000-6-2	AI	
Pushbutton	Pushbutton, left, white, 1NC (1NC1NO) Pushbutton, right, white, 1NC (1NC1NO) 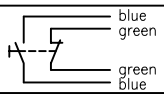		DTL (DTLOS) DTR (DTROS)	
Mechanical interlock master controller	Mechanical release by lifting latch		Z	

Ordering example:

G13 – 8 – 12 – T11 – DTL – WH – Z

- Form
- Adapter 8 mm for ST0, ST1, VCS0, CS1, VNS0
- Adapter 12 mm for NS3, NNS0, VNS2
- Twist switch with spring return 1-0-1
- Pushbutton left
- Colour of pushbutton white
- Mechanical interlock

Note:
Due to restricted space only a few fittings are installable at the same time

Spohn+Burkhardt
Elektrotechnische Fabrik Blaubeuren

Mauergasse 5
89143 BLAUBEUREN
GERMANY

Tel. +49 7344 171-0 info@spobu.de
Fax +49 7344 171-99 www.spobu.de

Version	Description	Function	Type	EUR
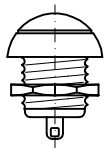	Push button flat 1NO		P9F–	
	Push button flat 1NO,1NC		P9F0S–	
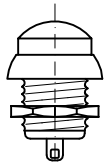	Push button high 1NO		P9H–	
	Push button high 1NO,1NC		P9H0S–	
Fittings: 	Protective cap with silicone for P9F–		RBF	
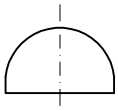	Protective cap with silicone for P9H–		RBH	

Ordering example:

P9F WH
- WH: Colour knob (e.g. white)
- P9F: Push button flat 1NO

Following knob colours are available:

GN	=	green
RD	=	red
YE	=	yellow
BU	=	blue
WH	=	white
BK	=	black
GY	=	grey
OG	=	orange
VT	=	violet

Technical data:

Protection IP67
Push button for central fixation (bore ø12 mm)
Contacts with soldered connections
Gold plated silver contacts
Maximal contact load: 24 VDC – 2 A inductive
Minimal contact load: 5 VDC – 1 mA ohmic

Note:

When switching with more than 0,1 A golded coat will get destroyed.
After that no more safe switching of small currents/voltages is assured.

Spohn+Burkhardt
Elektrotechnische Fabrik Blaubeuren

Mauergasse 5
89143 BLAUBEUREN
GERMANY

Tel. +49 7344 171-0 info@spobu.de
Fax +49 7344 171-99 www.spobu.de

MON



GMON/SMON



Features

- controller for 1–0–1 steps
- with spring return
- modular design
- low depth of fitting
- drive for 1 and 2 axes
- with or without cross gate
- lever in steel
- on request: push button in lever
- microswitch with change–over contacts
- silver contacts
- electrically safe gold–plated contacts
- resistant against ozone, UV–radiation, oil and maritime climate

Technical data

- rating insulation voltage Ui 60 V *)
- conventional thermal current Ith 10 A
- capacity with microswitches

voltage	ohmic load	inductive load
up to 15 V	10 A	10 A
up to 30 V	8 A	7 A
250 VAC	10 A	6 A

- mechanical life 6 mio cycles
- protection on front (DIN EN 60529) IP54
- max. deflection ±18°
- max. number of switch positions 1 – 0 – 1
- surrounding temperature –20...+60 °C
- regulations
  - IEC60947–1, DIN EN 60947–1, VDE 0660 part 100
  - IEC60947–5–1, DIN EN 60947–5–1, VDE 0660 part 200

*) option: version for Ui = 230 VAC

Applications

- radio and remote control
- video and surveillance system
- x–y control
- medical engineering
- joystick for slave functions
- further information see list 7 sheet 4/2

Features

- controller with spring return
- modular design for series and client–specific versions
- drive for 1 and 2 axes
- with or without cross gate
- on request: push button in lever
- forced NC
- SMON with silver contacts for max. 2 A
- GMON with gold–plated contacts for low voltage
- mounting of potentiometers possible
- resistant against ozone, UV–radiation, oil and maritime climate

Technical data

- rating insulation voltage Ui 60 V *)
- conventional thermal current Ith 2 A
- rating operational voltage – rating operational current
  - SMON: AC12: Ue=230 V–50 Hz – Ie = 2 A
  - SMON: AC15: Ue=230 V–50 Hz – Ie = 1 A
  - GMON: Umax. = 30 VDC – Imax = 4 mA

- mechanical life 10 mio cycles
- protection on front (DIN EN 60529) IP54
- max. deflection ±30°
- max. number of switch position 5 – 0 – 5
- surrounding temperature –20...+60 °C
- regulations
  - IEC60947–1, DIN EN 60947–1, VDE 0660 part 100
  - IEC60947–5–1, DIN EN 60947–5–1, VDE 0660 part 200

*) option: version for Ui = 230 VAC

Applications

- radio and remote control
- video system
- surveillance system
- medical engineering
- joystick for slave functions
- further informations see sheet 4/1

Spohn+Burkhardt
Elektrotechnische Fabrik Blaubeuren

Mauergasse 5
89143 BLAUBEUREN
GERMANY

Tel. +49 7344 171-0 info@spobu.de
Fax +49 7344 171-99 www.spobu.de

Controller GMON, SMON

Dimensions see sheet M 4/1A + M 4/1B

List 7 / 2014
4/1



Photo:
GM0N6KVRHD 9P1.9P1+2xB55

Controller with maximal 5–0–5 steps, forced operated silver– and gold–contacts.
Protection IP54 front side.
Application for stationary and due to low weight for portable control stations (radio and remote control).

On request:
Contact circuits and gates according to client's requirement.
Mounting of conductive plastic and wire wounded potentiometer for analogue controls.

See sheet 1/1.

Contacts / Circuit directions	Gold contacts maximal 30 VDC, 4 mA	Silver contacts maximal 60 VAC *), 2 A	Basic price drive EUR
↕ or ↔	GMON–ER..	SM0N–ER...	
✥	GMON–VR...	SM0N–VR...	

Step circuits without zero contact see sheet S 40/7	Additionals each axis EUR	Step circuit with zero contact see sheet S 40/7	Additionals each axis EUR
1		10	
2		20	
24		240	
3		30	
4		40	
42		420	
5		50	

Potentiometer circuit without zero contact see sheet S 40/7	Additionals each axis EUR	Potentiometer circuit with zero contact see sheet S 40/7	Additionals each axis EUR
8P1		9P1	

Calculation for special circuits	Number of contacts each axis		Additionals each axis EUR
	2 4 6 8		

Additionals			
	Potentiometer see sheet 14/...		
	Push button in handle:		
	1 NO –contact	24 VDC–1 A	HD
	1 NC "	24 VDC–1 A	HD0
	1 NO/NC "	24 VDC–1 A	HDU
	1 NO/NC "	24 VDC–1 A	HDUU
	Mechanical interlock		Z
	Cross gate		K
	Special gate, designation at clear text		SK

Type	Example: S	M0N	6	K	V	R	HD	9P1.40 +	B55
S silver contacts G gold contacts	S								
M0N version		M0N							
5**) rubber boots ø50 mm 6 rubber boots ø60 mm			6						
– without gate K cross gate				K					
E E–drive V V–drive					V				
R spring return						R			
HD push button in handle Z mechanical interlock							HD		
see sheet S40/7 circuit in view direction circuit in cross direction								9P1.40 +	
see sheet 14/... potentiometer in view direction potentiometer in cross direction									B55

Details:
*) Type for 230 VAC
*) Rubber boot ø50 mm only by maximal 2–0–2 circuit steps.

Spohn + Burkhardt
Elektrotechnische Fabrik Blaubeuren

Mauergasse 5
89143 BLAUBEUREN
GERMANY

Tel. +49 7344 171-0 info@spobu.de
Fax +49 7344 171-99 www.spobu.de



Photo:
MON6VR W.W

	Type	Contacts		Switching capacity micro switch	EUR
	SMON5ER WK	Silver		250 VAC 2 A 24 VDC 0,5 A	
	SMON5VR WK.WK				
	GMON5ER WK	Gold		30 VDC 4 mA	
	GMON5VR WK.WK				
	MON6ER W	Silver		250 VAC 6 A 24 VDC 16 A inductiv	
	MON6VR W.W				
	MON6ER 2W	Silver		250 VAC 6 A 24 VDC 16 A inductiv	
	MON6VR 2W.2W				
	MON6ER 2SW	Silver	0 I II 0 I II	250 VAC 6 A 24 VDC 16 A inductiv	
	MON6VR 2SW.2SW				
	MON5ER 0S	Gold plated on silver contacts *)		30 VDC 4 mA	
	MON5VR 0S.0S			250 VAC 3 A 24 VDC 1 A	

Special fittings	Push button in handle			EUR
	1 NO	HD	24 VDC 1 A	
	1 NC	HD0	24 VDC 1 A	
	1 NO/NC	HDU	24 VDC 1 A	
	Mechanical interlock	Z		
	Cross gate	K		

*) Maximum rating for golded coat: 30 VDC 4 mA
Maximum rating for silver contact: 250 VAC 3 A
24 VDC 1 A

Spohn+Burkhardt
Elektrotechnische Fabrik Blaubeuren

Mauergasse 5
89143 BLAUBEUREN
GERMANY

Tel. +49 7344 171-0 info@spobu.de
Fax +49 7344 171-99 www.spobu.de

ST0



Features

- compact and cost–efficient controller
- spring return or friction brake, with or without notches
- modular design for series and client–specific versions

- narrow type of construction
- available with standard, universal or palm handle
- mechanical interlock on request
- microswitch (change–over contact) or double contact elements
- mounting of potentiometer or encoder possible
- valve amplifier for direct control of magnetic valves
- resistant against ozone, UV–radiation, oil and maritime climate

Technical data

- rating insulation voltage Ui 60 V and 250 V respectively
- conventional thermal current Ith 10 A and 16 A respectively
- capacity with microswitches see ST1
- capacity with double contact elements:
  - rating operational voltage – rating operational current
  - AC12: Ue = 230 V–50/60 Hz – Ie = 16 A
  - AC15: Ue = 230 V–50/60 Hz – Ie = 6 A
- mechanical life 6 mio. cycles
- protection on front (DIN EN 60529) IP54
- max. deflection ±37,5°
- max. number of switch position 4 – 0 – 4
- surrounding temperature –20 °C...+60 °C
- regulations
  - IEC60947–1, DIN EN 60947–1, VDE 0660 part 100
  - IEC60947–5–1, DIN EN 60947–5–1, VDE 0660 part 200

Applications

- remote control, portable control station
- as slave controller for railway applications
- automotive industry
- electro–hydraulic applications
- controller for slave functions
- further information see sheet 5/2

ST1



Features

- compact controller, protection front IP56
- spring return or friction brake, with or without notches
- modular design for series and client–specific versions

- drive in aluminium casting
- available with standard, universal or palm handle
- mechanical interlock on request
- microswitch with change–over contact
- silver or electrically safe gold–plated contacts
- mounting of potentiometer or encoder possible
- resistant against ozone, UV–radiation, oil and maritime climate

Technical data

- rating insulation voltage Ui 60 V *)
- conventional thermal current Ith 10 A
- capacity with microswitches

voltage	ohmic load	inductive load
up to 15 V=	10 A	10 A
up to 30 V=	8 A	7 A
up to 50 V=	3 A	2 A

- mechanical life 6 mio. cycles
- protection on front (DIN EN 60529) IP56
- max. deflection ±37,5°
- max. number of switch positions 1 – 0 – 1
- surrounding temperature –20 °C...+60 °C
- regulations
  - IEC60947–1, DIN EN 60947–1, VDE 0660 part 100
  - IEC60947–5–1, DIN EN 60947–5–1, VDE 0660 part 200

*) option: type for Ui = 230 VAC

Applications

- remote control, portable control station
- for applications outside
- automotive industry
- electro–hydraulic applications
- controller for slave functions
- further information see sheet 5/4

Spohn+Burkhardt
Elektrotechnische Fabrik Blaubeuren

Mauergasse 5
89143 BLAUBEUREN
GERMANY

Tel. +49 7344 171-0 info@spobu.de
Fax +49 7344 171-99 www.spobu.de

Single axis master controller ST0

Dimensions see sheet M 5/2

List 7 / 2014
5/2



Protection category:
front side IP54
connection IP00

Elektrical data:
ST0:
15 VAC/DC
ohmic: 10 A
inductive: 10 A

30 VAC/DC
ohmic: 8 A
inductive: 7 A

Option:
Version for 230 VAC

ST0N:

DC 13	24 V	1,1 A
DC 13	230 V	0,2 A
AC 12	230 V	10 A
AC 15	230 V	4 A

Version / Circuit direction	Without spring return with 0-notching		With spring return		Basic price	Additional price circuit			Additional price potentiometer	
	for 1-0-1 steps	for potentiometer circuit, with brake	for 1-0-1 steps	for potentiometer circuit	drive	P0	8P1 / P	9P1	G5/B55 / G55 / M55 with mount	PZ11 / PZ55 / PZ1010 with mount
									EUR	EUR
A ↕ B	ST0-W		ST0-RW							
		ST0-B-		ST0-R-						
	contacts for max. 4-0-4 steps	brake for potentiometer circuit	for max. 4-0-4 steps for potentiometer circuit			each double contact elements, circuit see S 40/1			potentiometer B55 / PQ55 / PQS55 with mount	
	ST0N-	ST0N-B-	ST0N-R							

Circuits:

W

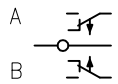

P0

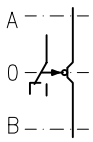

8P1

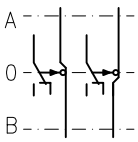

9P1

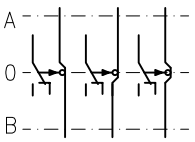

P

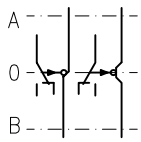

Potentiometer: (more information see sheet 14/1A + 14/2)

	Ohmic value	Centre tap	Centre dead band
G5	2k5-2k5	x	-
G55/M55/B55	5k-0-5k	x	x
PZ11	1k-0-1k	x	x
PZ55	5k-0-5k	x	x
PZ1010	10k-0-10k	x	x
PQS55	5k-5k	x	-
PQ55	5k-0-5k	x	x

Additional price: EUR

Mechanical interlock	Z
Clamp	

Special handles: see sheet 3/2...

Ordering example:

	11							
	09	R		P				
ST0(N)	07	B	Z	30	+	G55	+	B1NS

- Type
- Lever 110, 90 or 70 mm
- Spring return / friction brake
- Mechanical interlock
- Circuit, for ST0N see sheet S 40/1
- Potentiometer
- Handles see sheet 3/2... give clear text

Spohn+Burkhardt
Elektrotechnische Fabrik Blaubeuren

Mauergasse 5
89143 BLAUBEUREN
GERMANY

Tel. +49 7344 171-0 info@spobu.de
Fax +49 7344 171-99 www.spobu.de

Controller ST1

Dimensions see sheet M 5/8

List 7 / 2014
5/4



Protection category:
front side IP56
connection IP00

Elektrical data:
15 VAC/DC
ohmic: 10 A
inductive: 10 A

30 VAC/DC
ohmic: 8 A
inductive: 7 A

Option:
Version for 230 VAC

Version / Circuit direction	Without spring return with 0-notching: for 1-0-1 steps	Without spring return with 0-notching: for potentiometer circuit, with brake	With spring return: for 1-0-1 steps	With spring return: for potentiometer circuit	Basic price drive	Additional price: Circuit P0	Circuit 8P1 P	Circuit 9P1	potentiometer G.../B... M55 PZ... with mount EUR	potentiometer PQ... PQS... with mount EUR
A / B	ST1-W		ST1-RW							
A / B		ST1-B-		ST1-R-						

Circuits:

W

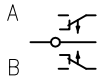

P0

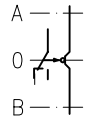

8P1

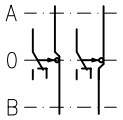

9P1

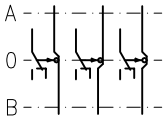

P

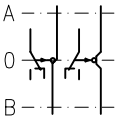

Potentiometer: (more information see sheet 14/1A + 14/2)

	Ohmic value	Center tap	Center dead band
G5	2k5-2k5	x	-
G55/M55/B55	5k-0-5k	x	x
PZ11	1k-0-1k	x	x
PZ55	5k-0-5k	x	x
PZ1010	10k-0-10k	x	x
PQS55	5k-5k	x	-
PQ55	5k-0-5k	x	x

Additional price: EUR

Mechanical interlock
Chromated enclosure — Z

Special handles: see sheet 3/2...

Ordering example:

ST1 11 B (R) Z P0 8P1 + G55 + B1NS

- ST1 — Type
- 11 — Lever 110 mm
- B (R) — Spring return / friction brake
- Z — Mechanical interlock
- P0 8P1 — Circuit
- G55 — Potentiometer
- B1NS — Handles see sheet 3/2... give clear text

Spohn + Burkhardt
Elektrotechnische Fabrik Blaubeuren

Mauergasse 5
89143 BLAUBEUREN
GERMANY

Tel. +49 7344 171-0 info@spobu.de
Fax +49 7344 171-99 www.spobu.de

Controller ST2

Dimensions see sheet M 5/5

List 7 / 2014
5/5



Protection category:
front side IP54
connection IP00

Elektrical data:
15 VAC/DC
ohmic: 10 A
inductive: 10 A

30 VAC/DC
ohmic: 8 A
inductive: 7 A

Version / Circuit direction	Without spring return with 0-notching: for 1-0-1 steps	Without spring return with 0-notching: for potentiometer circuit, with brake	With spring return: for 1-0-1 steps	With spring return: for potentiometer circuit	Basic price drive	Additional price: Circuit P0	Circuit 8P1	Circuit 9P1	potentiometer G5 / G55 / M55 with mount	potentiometer PZ11 / PZ55 / PZ1010 with mount
A ↕ B	ST2-W		ST2-RW							
A ↕ B		ST2-B-		ST2-R-						
						EUR			EUR	

Circuits:

W

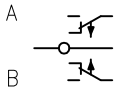

P0

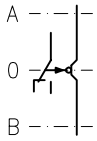

8P1

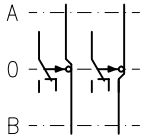

9P1

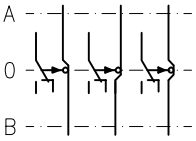

Potentiometer: (more information see sheet 14/1A + 14/2)

Type	Ohmic value	Center tap	Center dead band
G5	2k5-2k5	x	-
G55/M55	5k-0-5k	x	x
PZ11	1k-0-1k	x	x
PZ55	5k-0-5k	x	x
PZ1010	10k-0-10k	x	x

Ordering example:

ST2	08	R B	P0 + G55
Type			
	Lever 80 mm		
		Spring return / friction brake	
			Circuit
			Potentiometer

Spohn+Burkhardt
Elektrotechnische Fabrik Blaubeuren

Mauergasse 5
89143 BLAUBEUREN
GERMANY

Tel. +49 7344 171-0 info@spobu.de
Fax +49 7344 171-99 www.spobu.de

Controller ST3

Dimensions see sheet M5/6

List 7 / 2014
5/6



IP66
frontal

operation
−40 °C
+60 °C

storage
−50 °C
+80 °C

R

30 V=
0,5 A

zero notching

adjustable
friction brake

Quality standard:
IEC60947−1
DIN EN60947−5−1

	Basic price EUR	Additional price EUR

Features:

The controller ST3, a control unit with preselected analogue values, was developed especially for ships and yachts.

Standard is T−handle and friction brake

Optionally available with digital direction contacts, push buttons in grip, cover hood.

Drive	with friction brake		
EN (A / B)	ST3.EN.B−−−		
EU (A / B)	ST3.EU.B−−−		
D (A C / B D)	ST3.D.B−−−.B−−−		

Options:

Potentiometer:
single 5k−0−5k B55

Direction contacts:
each lever has a changeover in each direction
Push button 1S in T−handle
Push button 1S1Ö in T−handle

Cover hood

Engraving indicator scale, each line

On request:

Indicator scale with symbols, logos
CANopen−interface
Profibus−DP−interface
Current output for 20...4...20 mA

Ordering example:

ST3 . EN / EU / D . B T W B55 . B T W B55 + Q + X

- Type
- Drive
- AB
  - Friction brake handle
  - Contacts
  - Potentiometer
- CD
  - Friction brake handle
  - Contacts
  - Potentiometer
- Cover hood
- Special version

Spohn+Burkhardt
Elektrotechnische Fabrik Blaubeuren

Mauergasse 5
89143 BLAUBEUREN
GERMANY

Tel. +49 7344 171-0 info@spobu.de
Fax +49 7344 171-99 www.spobu.de



Photo:
VCS09611 VR H

Description:
The controllers are designed in general according to the international recommendation IEC 947–5–1 and UL.
Characteristics see sheet 1/1
KVCS0 with soldering connections

Design:
One drive block consisting of non–leakage current, warm and cold resistant insulated material is responsible for all mechanical components, as well as for zero contacts and for additional assembled horn or deadman contacts.
Centred to lever the double contact elements for step programme are inserted form fitted and secured by screws with diagonal slides.
Double contact elements and cams are therefore easy replaceable.
For restriction of positions limit stops are available (see sheet E 7/1).

Electric protection:
All mechanical parts mounted in the insulated housing are contact safe.
All electrical parts are mounted contact safe.
New double contact elements are contact safe according to IEC 536
They have double circuit break with parallel and electrical linked double way connected contacts and therefore hight fail safety is given even when used low voltage.

Contact system:
Parallel contacts with cross contacted for highest contact security

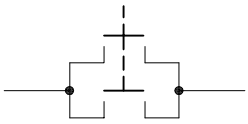

Corrosion protection:
All metal parts used in the construction of controller are treated against corrosion.

Models:
Stayput or spring return steps up to 6–0–6.

Construction:
The housing is made of "ZYTEL" and this material has excellent electrical and heat resistant properties.
The zero and deadman contacts are contained within this housing and the main contacts are mounted on the four sides.
These features ensure a compact and versatile controller allowing easy replacements of contacts.

Extended models:
Contact arrangement can be designed to suit customer requirements with a maximum of 12 circuits for each drive.

Potentiometer attachment:
There is mounted a pot attachment plate instead of a double contact element.
There is a gear drive to turn the potentiometer ±140°.

Encoder attachment:
The encoder is mounted instead of a double contact element.

Symbols and engravings:
The controller escutcheon is designed that engraving indicating mode of operation is easily carried out.

Assembly instructions:

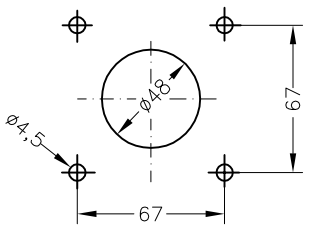

Drilling holes
in switch board

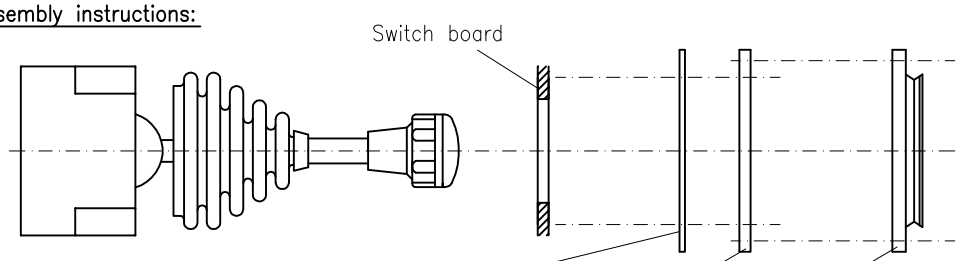

1) Pull lever and rubber boot through switch board

2) Gasket and mounting plate onto switchboard and tighten to controller

3) Snap on foil and escutcheon plate, pull over the rubber boot

Spohn+Burkhardt
Elektrotechnische Fabrik Blaubeuren

Mauergasse 5
89143 BLAUBEUREN
GERMANY

Tel. +49 7344 171-0 info@spobu.de
Fax +49 7344 171-99 www.spobu.de

Controller VCS0, KVCS0

Dimensions see sheet M 7/4A1 + M 7/4A2

List 7 / 2014
7/4

Controller VCS0 with screwed connections, KVCS0 with soldered connections, maximal 6–0–6 steps.
All controllers with escutcheon plate (72x72 mm, 96x96 mm) or bracket ring (S0, S) replaceable double contact elements and cams. Electrical and mechanical data see sheet 1/1.
Protection IP54 front side, below IP00, on request available with enclosure.

Connection / Switch–direction	With screw connections: without spring return	With screw connections: with spring return	With screw connections: with friction brake *)	With soldered connections: without spring return	With soldered connections: with spring return	With soldered connections: with friction brake *)	EUR
↕ or ↔	VCS0–E	VCS0–ER	VCS0–EB	KVCS0–E	KVCS0–ER	KVCS0–EB	
✥	VCS0–V	VCS0–VR	VCS0–VB	KVCS0–V	KVCS0–VR	KVCS0–VB	

Step circuits see sheet S 40/4

Without zero contact	Additional price per axis EUR	With zero contact	Additional price per axis EUR
1		10	
2		100	
3		20	
12		30	
21		120	
24		240	
26		260	
42		420	
4		40	
5		50	
6		60	

Potentiometer circuits see sheet S 40/4 + S 40/5..

Without zero contact	Additional price per axis EUR	With zero contact	Additional price per axis EUR
8P1 4P, 5P, 6P		PN, 4PN, 5PN, 6PN PNN	
8P1A, 8P2 4P2, 5P2, 6P2		9P1 4P0, 5P0, 6P0	
8P2A		9P1A, 10P 4P00, 5P00, 6P00 4P0E, 5P0E, 6P0E	
		8P20 4P20, 5P20, 6P20	

Special fittings:	Type:	Additional price EUR
Limiting gate 36°–0–36°	AK	
Limiting gate special angle	AK	
Cross gate 36°–0–36°	KK	
Special gate (clearly defined)	SK	
For special circuits:		
Each double contact element		
Each zero contact (maximal 1x per axis)		
Engraving **):		
Each line (maximal 14 letters)		
Each pair of symbols (see sheet 2/3)		
Plastic enclosure VCS0–M1		
Plastic enclosure VCS–M3		
Steel enclosure 125x125x90 mm		

	Type:	EUR
Version IP65, on front according to V04828–2		
Special notching		
Escutcheon plate black		
With bracket ring and rubber boot V041K	S	
With bracket ring and rubber boot V040KE	S0	
With bracket ring and rubber boot V041N	S1	
Inserts in lever	see sheet 2/1, 2/1A	
Special handles	see sheet 3/...	
Encoder	see sheet 15/14, 15/15	
Potentiometer	see sheet 14/...	

Ordering:

		96							
		72	11	AK	E				
K	VCS0	S	14	KK	V	R	H	40.	9P1 + B55
		S0		SK		B			
		S1							

- Soldered connection
- Type
- Plastic escutcheon plate 96x96 mm / Alu escutcheon plate 72x72 mm / Bracket ring S/S0/S1
- Lever length 110 mm / 140 mm
- Limiting gate AK / Cross gate KK / Special gate SK
- Single or two axis drive
- Spring return / Friction brake
- Fittings in handle see sheet 2/1
- Potentiometer see sheet 14/...
- Circuit in cross direction
- Circuit in view direction

Note:
*) Friction brake is necessary for controller without spring return and with potentiometer.

**) Please clearly defined engraving.

Spohn + Burkhardt
Elektrotechnische Fabrik Blaubeuren
Mauergasse 5
89143 BLAUBEUREN
GERMANY
Tel. +49 7344 171-0 info@spobu.de
Fax +49 7344 171-99 www.spobu.de

Controller CS1

Dimensions see sheet M 7/5 + M 7/6

List 7 / 2014
7/5



Photo:
CS1.7211V M1.M1

Versions:

CS1S with ring

CS1.72 with black escutcheon plate

CS1G enclosed

Description:

The CS1 is characterized by compact form with interior placed potentiometers and with attached microswitches, this allows to save space. The solid mechanical drive assures a long lifetime. We produce modular design for series and client-specific versions for various applications.

Versions with integrated electronics see sheet 7/11.

Version / Drive block / Circuit directions	Without spring return with 0-notching: for 1-0-1 steps	Without spring return with 0-notching: for potentiometer circuit with brake	With spring return: without 0-notching	With spring return: with 0-notching	Basic price drive
x / y	CS1S-E-	CS1S-EB-	CS1S-E-RL-	CS1S-E-R-	
y / x	CS1S-V-	CS1S-VB-	CS1S-VRL-	CS1S-VR-	
x / y	CS1.72-E-	CS1.72-EB-	CS1.72-E-RL-	CS1.72-E-R-	
y / x	CS1.72-V-	CS1.72-VB-	CS1.72-VRL-	CS1.72-VR-	
x / y	CS1G-E-	CS1G-EB-	CS1G-E-RL-	CS1G-E-R-	
y / x	CS1G-V-	CS1G-VB-	CS1G-VRL-	CS1G-VR-	

Additional price each axis: circuit	each fixed potentiometer	
M	G5	GLR5
M1	G55	GLR55
MP	M55	
MP1		
EUR	EUR	

Circuits: (more information see sheet S 40/6):

Basic principle:

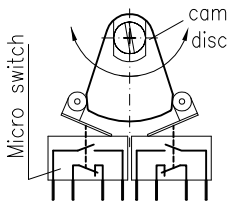

For 1-0-1 step

M without 0-notching (only feasible with spring return)
M1 with 0-notching

For Potentiometer mount:

MP without 0-notching (only feasible with spring return)
MP1 with 0-notching

Micro switches rated value :

AC 12 : 24 V 5 A
AC 15 : 24 V 0,5 A

DC 12 : 24 V 2 A
DC 13 : 24 V 0,5 A

Potentiometer: (more information see sheet 14/2 + 14/3)

Type	Ohmic value	Center tap	Center dead band	Direction contact
G5	2K5-2K5	x	–	–
G55/M55	5K-0-5K	x	x	–
GLR5	2K5-2K5	x	–	x
GLR55	5K-0-5K	x	x	x

All potentiometers made of conductive plastic, slider current max. 1µA, 10 mio. cycles,

Additional prices:	EUR		EUR
Limiting gate	KK		
Special gate	SK		
Mechanical interlock	Z		

Special handles: see sheet 3/3..., 3/6, 3/10

Ordering example:

CS1 G . 14 SK V R Z MP1 . MP1 + G.. . G.. + UG.. + engraving

- CS1 — Type
- G — Version
- 14 — Shaft
- SK — Limit -/cross-/special gate
- V — Single/two axis
- R — Spring return or friction brake
- Z — Mechanical interlock (optional)
- MP1 — Circuit in view direction 3)
- MP1 — Circuit in cross direction 3)
- G.. — Poti in view direction 3)
- G.. — Poti in cross direction 3)
- UG.. — Special handle, additionals give clear text
- + engraving — Give clear text

1) AK=standard
2) EX = single axis in cross direction, EY = single axis in view direction
3) In case of single axis other axis is omitted

Spohn+Burkhardt
Elektrotechnische Fabrik Blaubeuren

Mauergasse 5
89143 BLAUBEUREN
GERMANY

Tel. +49 7344 171-0 info@spobu.de
Fax +49 7344 171-99 www.spobu.de

Controller CS1G with integrated electronic

List 7 / 2014
7/11



Electronic control equipments for cranes, construction machinery, fork lifts... are used more and more.
The controller CS1G is designed for those applications. It allows a stepless nominal value in accordance with lever deflection in x and y axis.
In order to detect the direction there are mechanical contacts or conductive plastic potentiometers with direction contacts available.
An integrated electronic converts analogue signals into digital output signals as requested (bit-current, current voltage)

Version / Drive block / Circuit directions	Without spring return with 0-notching: for 1-0-1 steps	Without spring return with 0-notching: for potentiometer circuit with brake	With spring return: without 0-notching	With spring return: with 0-notching	Basic price drive	Additional price each axis: circuit M, M1, MP, MP1, EUR	each fixed potentiometer: G5, G55, M55, EUR	each fixed potentiometer: GLR5, GLR55, EUR
x, y	CS1G-E-	CS1G-EB-	CS1G-E-RL	CS1G-E-R				
y, x	CS1G-V	CS1G-VB	CS1G-VRL	CS1G-VR				

Circuits: (more information see sheet S 40/6):

Basic principle:

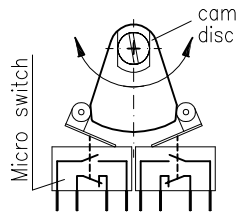

For 1-0-1 step
M without 0-notching (only feasible with spring return)
M1 with 0-notching

For Potentiometer mount:
MP without 0-notching (only feasible with spring return)
MP1 with 0-notching

Micro switches rated value :
AC 12 : 24 V 5 A
AC 15 : 24 V 0,5 A
DC 12 : 24 V 2 A
DC 13 : 24 V 0,5 A

Potentiometer: (more information see sheet 14/2 + 14/3)

Type	Ohmic value	Center tap	Center dead band	Direction contact
G5	2K5-2K5	x	–	–
G55/M55	5K-0-5K	x	x	–
GLR5	2K5-2K5	x	–	x
GLR55	5K-0-5K	x	x	x

All potentiometers made of conductive plastic, slider current max. 1µA, 10 mio. cycles,

Additional prices:	EUR		EUR
Limiting gate	KK		
Special gate	SK		
Mechanical interlock	Z		

Handles: see sheet 3/3..., 3/6, 3/10

Electronic	Type	Technical data see sheet	Add. price
CAN-Bus acc. to STW-protocol 2.0B interface	ESS100	16/1	
CANopen interface for DS301 + DS401	ESS101-GTL	16/2	
Profibus-DP-interface	ESS094A	16/3	
ProfiNet-interface	ESS132-1	16/5	
Current interface 20 mA-4-20 mA 4 mA-12-20 mA	ESS089 ESS135	16/23 16/24	
Voltage output 6 V-12 V-18 V	ESS098	16/21	
Valve amplifier (PWM-signal) max. 2 A, 24 VDC	ESS109	16/20 1 axis 2 axis 2 axis	

Ordering example:

```
                                EX   B
                11   AK1)       EY   RL        MP .  MP     M..  M..
CS1G            14   KK         V    R    Z   MP1 .  MP1 + G.. . G.. - ESS..+ UG..3) + engraving
```

Type
Shaft
Limit - / cross gate
Single/two axis
Spring return or friction brake
Mechanical interlock
Circuit in view direction 2)
Circuit in cross direction 2)
Give clear text
Handle 3) Additionals: give clear text
Electronic
Poti in cross direction 2)
Poti in view direction 2)

1) AK=standard
2) In case of single axis other axis is omitted
3) Please assign handle clearly defined

Spohn+Burkhardt
Elektrotechnische Fabrik Blaubeuren
Mauergasse 5
89143 BLAUBEUREN
GERMANY
Tel. +49 7344 171-0 info@spobu.de
Fax +49 7344 171-99 www.spobu.de



Photo:
NS3G 11 AK VR MP1.MP1 +
2 x BLR55 + UGD + Profibus-Interface +
sensor deadman ESS111

The NS3 joystick controllers are the heavy duty range of the varions controller types and available to meet the most of insustrial applications.

They are compact and yet of robust construction providing precise step and analog control as there are Potentiometer, HALL, CAN-, CANopen- and Profibus interface available.

Due to modular system all kind of handles can be mounted.

Spohn+Burkhardt
Elektrotechnische Fabrik Blaubeuren

Mauergasse 5
89143 BLAUBEUREN
GERMANY

Tel. +49 7344 171-0 info@spobu.de
Fax +49 7344 171-99 www.spobu.de

Controller NS3, NS3G

Dimensions see sheet M 8/2

List 7 / 2014
8/2



This controller NS3 is characterised by robust and compact form.
The master controller is applicable for cranes as well as for electric hydraulic use.

We manufacture standard and customised specifications with connections by solder or screw, as well as various handles. Potentiometers and hall-sensors are available as elements for analogue outputs.
Furthermore bus interfaces for CAN and profibus as well as voltage and current outputs are available.
For the application in combination with hydraulic valves there is an integrated power electronic with PMW (pulse wide modulation) current output available.

Drive block / Circuit directions	Without spring return with 0-notching for 1-0-1 steps	Without spring return with 0-notching for potentiometer circuit with brake	With spring return without 0-notching	With spring return with 0-notching	Basic price drive	Additional price each axis Circuit M MP5 M1 MP MP1 EUR	Additional price each axis potentiometer B5 BLR5 B55 BLR55 with mount EUR
x y	NS3-E-	NS3-EB-	NS3-E-RL-	NS3-E-R-			
y x	NS3-V	NS3-VB-	NS3-VRL-	NS3-VR-			
x y	NS3G-E-	NS3G-EB-	NS3G-E-RL-	NS3G-E-R-			
y x	NS3G-V	NS3G-VB-	NS3G-VRL-	NS3G-VR-			

Circuits: (more information see sheet S 40/5 + S 40/6):

with micro switches:

Basic principle:

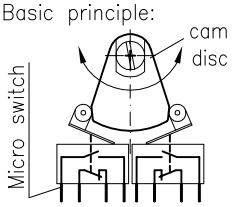

For 1-0-1 step
- **M** without 0-notching (only feasible with spring return)
- **M1** with 0-notching

For Potentiometer mount:
- **MP** without 0-notching (only feasible with spring return)
- **MP1** with 0-notching
- **MP5** with 5-0-5 sensible notches

Micro switches rated value :

AC 12 : 24 V 5 A	DC 12 : 24 V 2 A
AC 15 : 24 V 0,5 A	DC 13 : 24 V 0,5 A

with double contact elements:

For Potentiometer mount:
- PNN
- 8P1

Potentiometer: (more information see sheet 14/2 + 14/3)

Type	Ohmic value	Center tap	Center dead band	Direction contact
B5	5K	x	-	-
B55	5K-0-5K	x	x	-
BLR5	5K	x	-	x
BLR55	5K-0-5K	x	x	x

Additional price:

		EUR
cross gate	KK	
special gate	SK	
mechanical inteterlock	Z	

other handles: see sheet 3/3..., 3/6, 3/10

Ordering example:

	18	AK1)	EX	B								
	14	KK	EY	RL		MP	.	MP				
NS3G	. 11	SK	V	R	Z	MP1	.	MP1	+ B..	. B..	+ UG..3)	+ engraving 4)

Type
Shaft
Limit -/cross-/special gate
Single/two axis
Spring return or friction brake
Mechanical interlock
Circuit in view direction 2)
Circuit in cross direction 2)
Poti in view direction 2)
Poti in cross direction 2)
Handle 3)
Gravur 4)

1) AK=standard
2) In case of single axis other axis is omitted
3) Assign handle clearly defined
4) Give clear text

Spohn+Burkhardt
Elektrotechnische Fabrik Blaubeuren

Mauergasse 5
89143 BLAUBEUREN
GERMANY

Tel. +49 7344 171-0 info@spobu.de
Fax +49 7344 171-99 www.spobu.de



This controller NS3 is characterised by robust and compact form, especially for electric hydraulic use.
Due to modular design, customised specifications are easy realisable.
Connections by plug, solder or screw for potentiometers and contacts are respectively available.
Furthermore bus interfaces for CAN and profibus as well as voltage and current outputs can be obtained.
For the application with magnetic valves there is an integrated power electronic with pulse width modulation available.

Version / Drive block / Circuit directions	Without spring return with 0-notching: for 1-0-1 steps	Without spring return with 0-notching: for potentiometer circuit with brake	With spring return: without 0-notching	With spring return: with 0-notching	Basic price drive
x, y	NS3G-E-	NS3G-EB-	NS3G-E-RL-	NS3G-E-R-	
y, x	NS3G-V	NS3G-VB-	NS3G-VRL-	NS3G-VR-	

Additional price each axis: Circuit		potentiometer	
M	PNN	B5	BLR5
M1	8P1	B55	BLR55
MP		with mount	
MP1	MP5		
EUR		EUR	

Circuits: (more information see sheet S 40/5 + S 40/6):

with micro switches:

Basic principle:

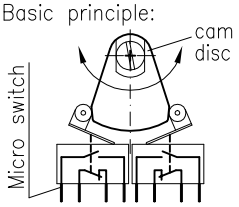

For 1-0-1 step
- **M** without 0-notching (only feasible with spring return)
- **M1** with 0-notching

For Potentiometer mount:
- **MP** without 0-notching (only feasible with spring return)
- **MP1** with 0-notching
- **MP5** with 5-0-5 sensible notches

Micro switches rated value :

AC 12 : 24 V 5 A	DC 12 : 24 V 2 A
AC 15 : 24 V 0,5 A	DC 13 : 24 V 0,5 A

with double contact elements:

For Potentiometer mount:
- **PNN**
- **8P1**

Potentiometer: (more information see sheet 14/2 + 14/3)

Type	Ohmic value	Center tap	Center dead band	Direction contact
B5	5K	x	–	–
B55	5K-0-5K	x	x	–
BLR5	5K	x	–	x
BLR55	5K-0-5K	x	x	x

Additional price:

	EUR
cross gate	KK
special gate	SK
mechanical inteterlock	Z

Handles: see sheet 3/3..., 3/6, 3/10

Electronic	Type	Technical data see sheet	Add. price
CAN-Bus acc. to STW-protocol 2.0B interface	ESS100	16/1	
CANopen interface for DS301 + DS401	ESS101-GTL	16/2	
Profibus-DP-interface	ESS094A	16/3	
ProfiNet-interface	ESS132-1	16/5	
Current interface 20 mA-4-20 mA	ESS089	16/23	
4 mA-12-20 mA	ESS135	16/24	
Voltage output 6 V-12 V-18 V	ESS098	16/21	
Valve amplifier (PWM-signal) max. 2 A, 24 VDC	ESS109	16/20 1 axis / 2 axis	

Ordering example:

	18	AK1)	EX	B										
	14	KK	EY	RL			MP .	MP						
NS3G	11	SK	V	R	Z	MP1 .	MP1	+	B..	. B..	–	ESS..	+ UG..3)	+ engraving

- Type
- Shaft
- Limit –/cross–/special gate
- Single/two axis
- Spring return or friction brake
- Mechanical interlock
- Circuit in view direction 2)
- Circuit in cross direction 2)
- Poti in view direction 2)
- Poti in cross direction 2)
- Electronic
- Handle 3) Additionals: give clear text
- Give clear text

1) AK=standard
2) In case of single axis other axis is omitted
3) Please assign handle clearly defined

Spohn+Burkhardt
Elektrotechnische Fabrik Blaubeuren

Mauergasse 5
89143 BLAUBEUREN
GERMANY

Tel. +49 7344 171-0 info@spobu.de
Fax +49 7344 171-99 www.spobu.de

VNS0



Features

- robust controller with aluminium console
- lever 8 mm, metal gear
- modular design for series and client–specific versions
- drive for 1 and 2 axes
- rotary motion with universal or T–handle
- version with double lever available (NS0–GG)
- ergonomic handles
- silver contact for max. 16 A
- electrically safe gold–plated contacts
- mounting of potentiometers, encoders possible
- resistant against ozone, UV–radiation, oil and maritime climate

Technical data

- rating insulation voltage Ui 400 V
- conventional thermal current Ith 16 A
- rotating operational voltage – rotating operational current
- AC12: Ue = 230 V–50/60 Hz – Ie = 16 A
  - AC15: Ue = 230 V–50/60 Hz – Ie = 6 A
  - DC12: Ue = 24V DC – Ie = 1,7 A
  - DC13: Ue = 24 VDC – Ie = 1,1 A
- mechanical life 20 mio. cycles
- protection on front (DIN EN 60529) IP54
- max. deflection ±36°
- max. number of switch position 7 – 0 – 7
- surrounding temperature –40 °C...+60 °C
- regulations
  - IEC60947–1, DIN EN 60947–1, VDE 0660 part 100
  - IEC60947–5–1, DIN EN 60947–5–1, VDE 0660 part 200
- approbations: CSA 15040, UL E106738(M)

Applications

- range of hoisting
- industrial control
- shipbuilding
- construction machinery
- automotive industry
- further information see sheet 9/...

NNS0



Features

- robust controller with aluminium console
- lever 12 mm, metal gear, limiting gate
- modular design for series and client–specific versions
- drive for 1 and 2 axes
- rotary motion with universal or T–handle
- ergonomic handles
- silver contact for max. 16 A
  electrically safe gold–plated contacts
- mounting of potentiometers, encoders possible
- resistant against ozone, UV–radiation, oil and maritime climate

Technical data

- rating insulation voltage Ui 400 V
- conventional thermal current Ith 16 A
- capacity with microswitches
  - AC12: Ue = 230 V–50/60 Hz – Ie = 16 A
  - AC15: Ue = 230 V–50/60 Hz – Ie = 6 A
  - DC12: Ue = 24 VDC – Ie = 1,7 A
  - DC13: Ue = 24 VDC – Ie = 1,1 A
- mechanical life 20 mio. cycles
- protection on front (DIN EN 60529) IP54
- max. deflection ±30°
- max. number of switch position 6 – 0 – 6
- surrounding temperature –40 °C...+60 °C
- regulations
  - IEC60947–1, DIN EN 60947–1, VDE 0660 part 100
  - IEC60947–5–1, DIN EN 60947–5–1, VDE 0660 part 200

Applications

- range of hoisting
- industrial control
- shipbuilding
- construction machinery
- automotive industry
- further information see sheet 9/...

Spohn+Burkhardt
Elektrotechnische Fabrik Blaubeuren

Mauergasse 5
89143 BLAUBEUREN
GERMANY

Tel. +49 7344 171-0 info@spobu.de
Fax +49 7344 171-99 www.spobu.de

Controller VNS0–E, VNS0–V

Dimensions see sheet M 9/2A + M 9/2B

List 7 / 2014
9/2



max.16 A/400 V
10 mio. cycles

silver contacts
gold plated
silver contacts
front side
IP54
lever 8 mm

Photo:
VNS0 44 U 11 AK VR

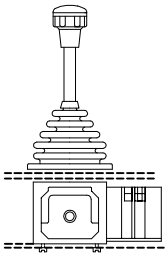

without | with spring return
base mounting
according to M 9/2B

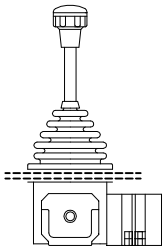

without | with spring return
front mounting
according to M 9/2A

Regulations:
IEC60947–1
DIN EN60947–5–1
VDE 0660 part 200
Approbations:
CSA 15040
UL E106738(M)

Features:
Double contact elements and programmed notching discs exchangeable according to S 40/1 or client's requirement. Notching disc suitable to circuit diagram (stepless or up to max. 7–0–7 steps available), handle, rubber boot, transparent escutcheon plate, legend foil

Ratings according to sheet 1/1

Note:
If the circuit is unsym. it is necessary to stipulate the arrangement

Drive arrangement E

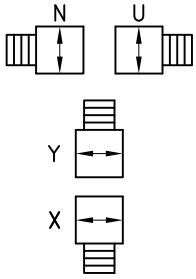

Drive arrangement V

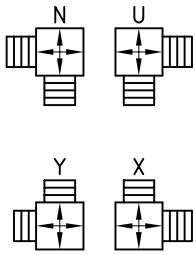

basic price	each silver double contact element (gold plated)	without spring return, base mounting	with spring return, base mounting	without spring return, front mounting	with spring return, front mounting
EUR	EUR				
		VNS0–N–E VNS0–U–E VNS0–Y–E VNS0–X–E		VNS0–FN–E VNS0–FU–E VNS0–FY–E VNS0–FX–E	
			VNS0–N–ER VNS0–U–ER VNS0–Y–ER VNS0–X–ER		VNS0–FN–ER VNS0–FU–ER VNS0–FY–ER VNS0–FX–ER
		VNS0––N–V VNS0––U–V VNS0––Y–V VNS0––X–V		VNS0––FN–V VNS0––FU–V VNS0––FY–V VNS0––FX–V	
			VNS0––N–VR VNS0––U–VR VNS0––Y–VR VNS0––X–VR		VNS0––FN–VR VNS0––FU–VR VNS0––FY–VR VNS0––FX–VR

Fitting in handle	see sheet 2/...
Universal, special handle	see sheet 3/...
Encoder	see sheet 15/...
Potentiometer	see sheet 14/...
Transmitter	see sheet 13/...

Additional prices for:

engraving each word (max. 14 letters)
escutcheon with symbols according to sheet 2/3 each pair
black aluminium escutcheon plate

limiting gate, lever deflection 36°	AK
special limiting gate	SAK
cross gate	KK
special gate	SK
special notching disc	
friction brake per axis	B

Ordering example: K VNS0 1 2 F N 11/14/18 SK/KK/AK V R H 8P1.9P1 + PQ55 . B55

- Gold plated contacts
- Type
- Double contact in view direction
- Double contact in cross direction
- Front mounting
- Arrangement
- Shaft 110/140/180 mm
- Special/cross/limiting gate
- Drive arrangement
- Spring return/friction brake
- Fitting in handle
- Circuit in view direction
- Circuit in dross direction
- Potentiometer in view direction
- Potentiometer in cross direction

Note:
Special handle, engraving should be described.

Spohn + Burkhardt
Elektrotechnische Fabrik Blaubeuren

Mauergasse 5
89143 BLAUBEUREN
GERMANY

Tel. +49 7344 171-0 info@spobu.de
Fax +49 7344 171-99 www.spobu.de

Controller NNS0–FE, NNS0–FV heavy version, IP00

Dimensions see sheet M 9/2N

List 7 / 2014
9/2N

Shaft ø12 mm
with limit gate
double contact elements and
cams are exchangeable.
Rating see sheet 1/1.
Standard circuit see sheet S 40/1 ect.
With transparent escutcheon, printable foil and
rubber boot

Note:
If the circuit is unsym.
it is important
to stipulate the
arrangement required

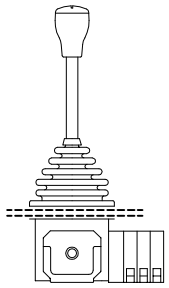

Regulations:
IEC60947–1
DIN EN60947–5–1
VDE 0660 part 200
Approbations:
CSA 15040
UL E106738(M)



Drive arrangement E

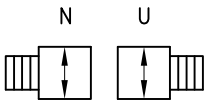

Drive arrangement V

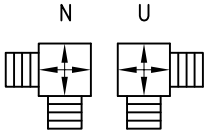

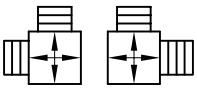

without spring return front mounting	with spring return front mounting	Basic price EUR	Additional per double contact EUR
NNS0–FNE NNS0–FUE			
	NNS0–FNER NNS0–FUER		
NNS0––FNV NNS0––FUV			
	NNS0––FNVR NNS0––FUVR		

Additionals:

	EUR
Fitting in handle see sheet 2/1C	
Other handles see sheet 3/...	
Engraving each word (max. 14 letters)	
each symbol	
Potentiometer attachment see sheet 14/...	
Synchro transmitter DG0 see sheet 13/1	
Encoder see sheet 15/...	

	EUR
Special gate	SK
Cross gate	KK
Double contact element with gold contacts	
Friction brake	

Ordering example:

NNS0 2 3 F N 11 14 18 SK KK AK V R HU 20 . 40

- Type
- Double contact in view direction
- Double contact in cross direction
- Front mounting
- Arrangement
- Shaft 11/140/180 mm
- Special/cross/limiting gate
- Drive arrangement
- Spring return
- Fitting in handle
- Circuit in view direction
- Circuit in cross direction

Engraving
type of potentiometer
should be described.

Spohn+Burkhardt
Elektrotechnische Fabrik Blaubeuren

Mauergasse 5
89143 BLAUBEUREN
GERMANY

Tel. +49 7344 171-0 info@spobu.de
Fax +49 7344 171-99 www.spobu.de

Controller VNS0–G, VNS0–H, VNS0–M

Dimensions see sheet M 9/3

List 7 / 2014
9/3

With replaceable double contacts and cam discs

Maximal 7–0–7 steps, IP00
Rating see sheet 1/1

Standard circuit see sheet S 40/1 ect. or request

With transparent escutcheon plate (without engraving), foil and rubber boot

Base–mounting

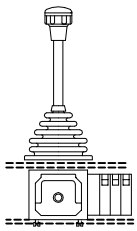

without | with spring return

Front–mounting

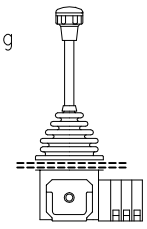

without | with spring return

Regulations:
IEC60947–1
DIN EN60947–5–1
VDE 0660 part 200
Approbations:
CSA 15040
UL E106738(M)



		without spring return		with spring return		Basic price EUR	Additional per double contact EUR
Drive arrangement G 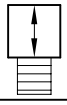		VNS0–G		VNS0–FG			
			VNS0–GR		VNS0–FGR		
Drive arrangement GY 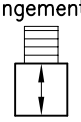		VNS0–GY		VNS0–FGY			
			VNS0–GYR		VNS0–FGYR		
Drive arrangement H 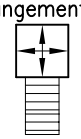		VNS0––H		VNS0––FH			
	Potentiometer attachment only for view direction		VNS0––HR		VNS0––FHR		
Drive arrangement M 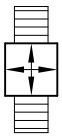		VNS0––M		VNS0––FM			
			VNS0––MR		VNS0––FMR		

Additionals:

	EUR
Fitting in handle see sheet 2/1	
Engraving each word (max. 14 letters)	
each symbol	
Potentiometer attachment see sheet 14/...	
(Arrangement H only for view direction)	
Synchro transmitter DGO see sheet 13/1	
Encoder see sheet 15/...	
Cross gate	KK
Special gate	SK
Limiting gate	AK
Special limiting gate	SAK
Double contact element with gold contacts	
Friction brake	

Ordering example: VNS0 2 3 F 11/14/18 SK/KK/AK H R H 20 . 40

Engraving, type of potentiometer should be described.

- Type
- Double contact in view direction
- Double contact in cross direction
- Front mounting
- Shaft 110 / 140 / 180
- SK special gate
- KK cross gate
- AK limiting gate
- Drive arrangement
- Spring return
- Fitting in handle
- Circuit in view direction
- Circuit in cross direction

Spohn + Burkhardt
Elektrotechnische Fabrik Blaubeuren

Mauergasse 5
89143 BLAUBEUREN
GERMANY

Tel. +49 7344 171-0 info@spobu.de
Fax +49 7344 171-99 www.spobu.de

Controller NNS0–G, NNS0–M heavy version

Dimensions see sheet M 9/3N

List 7 / 2014
9/3N

Shaft ø12 mm
with limit gate
double contact elements and
cams are exchangeable.
Rating see sheet 1/1.
Standard circuit see sheet S 40/1 ect.
With transparent escutcheon, printable foil and
rubber boot

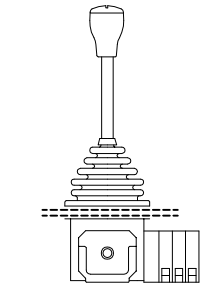

without | with
spring return
front mounting

Regulations:
IEC60947–1
DIN EN60947–5–1
VDE 0660 part 200
Approbations:
CSA 15040
UL E106738(M)



	without spring return front mounting	with spring return front mounting	Basic price EUR	Addi–tional per double contact EUR
Drive arrangement G	NNS0–FG			
		NNS0–FGR		
Drive arrangement M	NNS0––FM			
		NNS0––FMR		

Additionals:

	EUR		EUR
Fitting in handle see sheet 2/1C		Special gate	SK
Other grips see sheet 3/...		Cross gate	KK
Engraving each word (max. 14 letters)			
each symbol		Double contact element	
Potentiometer attachment see sheet 14/...		with gold contacts	
Synchro transmitter DGO see sheet 13/1		Friction brake	
Encoder see sheet 15/...			

Ordering example: NNS0 2 3 F 11 14 18 SK KK AK M R HU 20 . 40

Engraving,
type of potentiometer
should be described.

- Type
- Double contact in view direction
- Double contact in cross direction
- Front mounting
- Shaft 110 / 140 / 180
- SK special gate
- KK cross gate
- AK limiting gate
- Drive arrangement
- Spring return
- Fitting in handle
- Circuit in view direction
- Circuit in cross direction

Spohn+Burkhardt
Elektrotechnische Fabrik Blaubeuren

Mauergasse 5
89143 BLAUBEUREN
GERMANY

Tel. +49 7344 171-0 info@spobu.de
Fax +49 7344 171-99 www.spobu.de

Controller VNS0–A, VNS0–AA, VNS0–EA for front mounting

Dimensions see sheet M 9/4

List 7 / 2014
9/4

With replaceable double contacts and cam discs
IP00, maximal 7–0–7 steps
Rating see sheet 1/1
Standard circuit see sheet S 40/1 ect.

With transparent escutcheon plate (without engraving), and rubber boot

without spring return	with spring return	Basic price EUR	Additional per double contact EUR



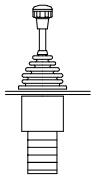

Drive arrangement A



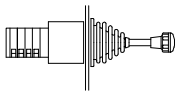

without spring return	with spring return	Basic price EUR	Additional per double contact EUR
VNS0–A	VNS0–AR		

Potentiometer–attachment possible

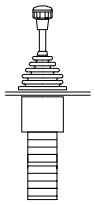

Drive arrangement AA



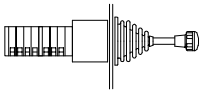

without spring return	with spring return	Basic price EUR	Additional per double contact EUR
VNS0––AA	VNS0––AAR		

Potentiometer–attachment only for view direction

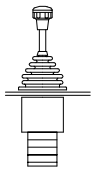

Drive arrangement EA

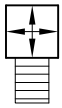

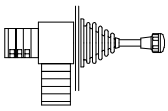

without spring return	with spring return	Basic price EUR	Additional per double contact EUR
VNS0––EA	VNS0––EAR		

Potentiometer–attachment for both directions possible

Additionals: EUR

Fitting in handle see sheet 2/1
Engraving each word (max. 14 letters)
each symbol

Potentiometer attachment see sheet 14/...
Synchro transmitter DG0 see sheet 13/1
Encoder see sheet 15/...

	EUR
Cross gate	KK
Special gate	SK
Limiting gate 36°–0–36°	AK
Special limiting gate	SAK
Double contact element with gold contacts	
Friction brake	

Ordering example:

VNS0 3 4 . 11 14 18 SK KK AK AA R TU 40 . 50

Engraving, type of potentiometer should be described.

- Type: VNS0
- Double contact in view direction: 3
- Double contact in cross direction: 4
- Shaft: 110 / 140 / 180 → 11 / 14 / 18
- SK special gate / KK cross gate / AK limiting gate → SK / KK / AK
- Dirve arrangement: AA
- Spring return: R
- Fitting in handle: TU
- Circuit in view direction: 40
- Circuit in cross direction: 50

Spohn+Burkhardt
Elektrotechnische Fabrik Blaubeuren

Mauergasse 5
89143 BLAUBEUREN
GERMANY

Tel. +49 7344 171-0 info@spobu.de
Fax +49 7344 171-99 www.spobu.de

Controller NNS0–A, NNS0–AA, NNS0–EA heavy version

Dimensions see sheet M 9/4N

List 7 / 2014
9/4N

Shaft ø12 mm
with limit gate
double contact elements and cams are exchangeable.
Rating see sheet 1/1.
Standard switches see sheet S 40/1 ect.
With transparent escutcheon, printable foil and rubber boot

	without spring return	with spring return	Basic price EUR	Additional per double contact EUR
 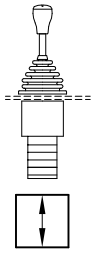 Drive arrangement A 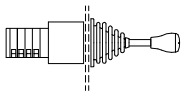	NNS0–A	NNS0–AR Potentiometer–attachment possible		
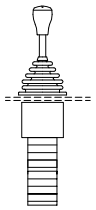 Drive arrangement AA 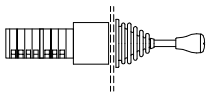	NNS0––AA	NNS0––AAR Potentiometer–attachment only for in view direction possible		
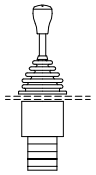 Drive arrangement EA 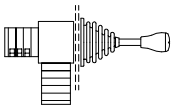	NNS0––EA	NNS0––EAR Potentiometer–attachment for both directions possible		

Additionals:

	EUR		EUR
Fitting in handle see sheet 2/1C		Special gate	SK
Other hanldes see sheet 3/3, 3/8, 3/10		Cross gate	KK
Engraving each word (max. 14 letters)			
each symbol		Double contact element	
Potentiometer attachment see sheet 14/...		with gold contacts	
Synchro transmitter DGO see sheet 13/1		Friction brake	
Encoder see sheet 15/...			

Ordering example: NNS0 3 4 . 11 SK / 14 KK / 18 AK AA R TU 40 . 50

Engraving, type of potentiometer should be described.

- Type
- Double contact in view direction
- Double contact in cross direction
- Shaft 110 / 140 / 180
- SK special gate / KK cross gate / AK limiting gate
- Dirve arrangement
- Spring return
- Fitting in handle
- Circuit in view direction
- Circuit in cross direction

Spohn+Burkhardt
Elektrotechnische Fabrik Blaubeuren

Mauergasse 5
89143 BLAUBEUREN
GERMANY

Tel. +49 7344 171-0 info@spobu.de
Fax +49 7344 171-99 www.spobu.de

Controller NSO–GG for front mounting

Dimensions see sheet M 9/5A + M 9/5B

List 7 / 2014
9/5

With replaceable double contacts and cam discs.
Maximal 7–0–7 steps, IP00
Rating see sheet 1/1
Standard circuit see sheet S 40/1 ect.



	With metallic escutcheon plate (without engraving) and rubber boots		Basic price	Additional per double contact
	without spring return	with	EUR	EUR
Drive arrangement GGEA 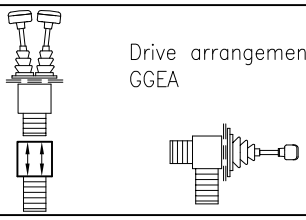	NSO--GGEA	NSO--GGEAR		
	Potentiometer–attachment for both operating handles			
Drive arragement GGVN 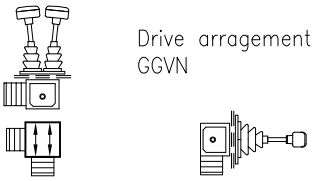	NSO--FN--GGV	NSO--FN--GGVR		
	Potentiometer–attachment for both operating handles			
Drive arrangement GGVU 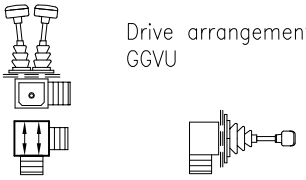	NSO--FU--GGV	NSO--FU--GGVR		
	Potentiometer–attachment for both operating handles			
Drive arrangement GGH 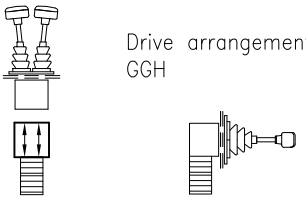	NSO--F--GGH	NSO--F--GGHR		
	Potentiometer–attachment only for one operating handle			
Drive arrangement GGAA 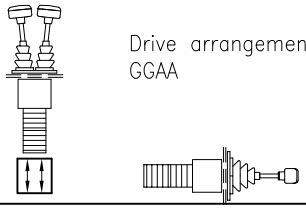	NSO--GGAA	NSO--GGAAR		
	Potentiometer–attachment only for one operating handle			

Additionals: EUR

Fitting in handle see sheet 3/2 + 3/10
T–handle G13 (by 140 or 180 mm) see sheet 3/10
Friction brake
Engraving each word (max. 14 letters)
each symbol

Potentiometer attachement see sheet 14/...
Synchro transmitter DGO see sheet 13/1

Ordering example:

NSO	3	2	F	U / N	11 / 14 / 18	GGH	R	DT	40	.20

- Type
- Double contact handle a–b
- Double contact handle c–d
- Front mounted
- Arrangement
- Shaft 110 / 140 / 180
- Drive arrangement
- Spring return
- Fitting in handle
- Circuit handle a–b
- Circuit handle c–d

Engraving, type of potentiometer or T–handle should be described.

Spohn + Burkhardt
Elektrotechnische Fabrik Blaubeuren

Mauergasse 5
89143 BLAUBEUREN
GERMANY

Tel. +49 7344 171-0 info@spobu.de
Fax +49 7344 171-99 www.spobu.de

Controller NS0--D, with differential drive

Dimensions see sheet M 9/6

List 7 / 2014
9/6

Rating see sheet 1/1...
Standard circuits see sheet S 40/1...
Additionals in handle see sheet 2/1...
Special handles see sheet 3/1...
Encoders/Potentiometers see sheet 14/1.../15/1...

Degree of protection front side IP54
" " " connection IP00

Version with:
transparent escutcheon plate, printable foil, rubber boot, double contact elements with silver or gold plated silvercontacts and cams are exchangeable

	notch by step circuit	friction disc by potentiometer circuit	spring return	Basic price EUR	each double contact element: silver (gold plated) EUR
 Photo: NS0 11 FN18DR 8P1.8P1 PW70.PW70					
Drive arrangement N 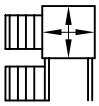	NS0--FN--D	NS0--FN--DB	NS0--FN--DR		
Drive arrangement U 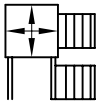	NS0--FU--D	NS0--FU--DB	NS0--FU--DR		

Additionals:

		EUR
Limiting gate 36°–0–36°	AK	
Special limiting gate	SAK	
Cross gate	KK	
Special gate (data should be described)	SK	

aluminium escutcheon black, 96x96 mm
engraving of escutcheon:
each line (max. 14 letters)
each symbol pair

Ordering example:

K NS0 2 2 F U 18 D R H 9P1. 9P1 + PQ55 .PQ55

- K — Gold contact
- NS0 — Type
- 2 — Number of double contacts in view direction
- 2 — Number of double contacts in cross direction
- F — Front mounting
- U — Arrangement
- 18 — Shaft
- D — Drive arrangement
- R — Spring return
- H — Push button in handle
- 9P1. — Circuit of view direction
- 9P1 — Circuit in cross direction
- PQ55 — Potentiometer in view direction
- .PQ55 — Potentiometer in cross direction

Spohn+Burkhardt
Elektrotechnische Fabrik Blaubeuren

Mauergasse 5
89143 BLAUBEUREN
GERMANY

Tel. +49 7344 171-0 info@spobu.de
Fax +49 7344 171-99 www.spobu.de

Bracket–controller VNS0–K

Dimensions see sheet M 9/7

List 7 / 2014
9/7

With replaceable double contacts and cam discs.
Rating see sheet 1/1
Standard circuit see sheet S 40/1 ect. or on request



With escutcheon plate and rubber boot connections above	on the side		Without spring return EUR	With spring return EUR
VNS0–KE VNS0–KER	VNS0–NKE VNS0–NKER	VNS0–UKE VNS0–UKER		
VNS0–KG VNS0–KGR	VNS0–NKG VNS0–NKGR	VNS0–UKG VNS0–UKGR		
VNS0––KH VNS0––KHR	VNS0––NKH VNS0––NKHR	VNS0––UKH VNS0––UKHR		
NS0––KGG NS0––KGGR	NS0––NKGG NS0––NKGGR	NS0––UKGG NS0––UKGGR		

EUR + each double contact

EUR + each double contact

Additionals:

	EUR
Fitting in handle see sheet 2/1	
Engraving each word (max. 14 letters)	
each symbol	
Potentiometer on request	
Synchro transmitter DGO see sheet 13/1	
Encoder see sheet 15/...	

For operating block KH	EUR
Cross gate	KK
Special gate	SK
Limiting gate	AK
Special limiting gate	SAK
Friction brake	

Ordering example: VNS0 *3 4 N K 11 14 18 SK KK AK H R T 40. 50

Engraving, type of potentiometer should be described.

Type
Double contact in view direction
Double contact in cross direction
Arrangement
Bracket
Shaft 110 140 180
SK special gate
KK cross gate
AK limiting gate
Drive arrangement
Spring return
Fitting in handle
Circuit in view direction
Circuit in cross direction

* Length 1 is not possible.

Spohn+Burkhardt
Elektrotechnische Fabrik Blaubeuren

Mauergasse 5
89143 BLAUBEUREN
GERMANY

Tel. +49 7344 171-0 info@spobu.de
Fax +49 7344 171-99 www.spobu.de

Controller NS002F:

max.
16 A/400 V

10 mio.
cycles

silver contacts

gold plated
silver contacts



Controller NS00– :

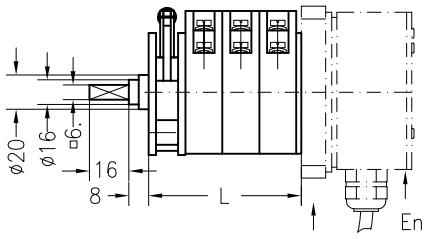

Regulations:
IEC60947–1
DIN EN60947–5–1
VDE 0660 part 200
Approbations:
CSA 15040
UL E106738(M)

Version:	Master controller:	without spring return	with spring return	with friction disc		basic price EUR	each silver double contact element (gold plated) EUR
double contact elements and programmed notching discs exchangeable according to S40/1 or client's requirement. Notching disc suitable to circuit diagram (stepless or up to max. 7–0–7 steps, or even 0–16 steps)	without escutcheon plate, without knob	NS00–					
			NS00–R	NS00–B			
	escutcheon plate black 72x72 mm, stainless steel ball handle, 3 engraved positions	NS00–F					
			NS00–FR	NS00–FB			
	escutcheon plate black 96x96 mm, stainless steel ball handle, 3 engraved positions	NS00–FA					
			NS00–FAR	NS00–FAB			
Ratings according to sheet 1/1	water proofed escutcheon plate ø70 mm stainless steel ball handle, 3 engraved positions	NS00–FOD					
			NS00–FODR	NS00–FODB			

Transmitter:

encoder, synchro transmitter	see sheet 13/...
potentiometer	see sheet 14/...
optoelectronic encoder	see sheet 15/...

Additional prices: EUR

engraving each word (max. 14 letters)
escutcheon with symbols each symbol

installation into cast enclosure:
NW104A (till NS006–, NS005–R/–B)
NW107A (till NS0010–, NS009–R/–B)

special notching disc

Ordering example: K NS00 1 F/FA/FOD R – KN/KG/DK . 30

Gold plated contacts
Type
Quantity of double contact elements
Front plate
F...attachment plate, aluminium escutcheon plate 72x72 mm black
FA... attachment plate, aluminium escutcheon plate 96x96 mm black
FOD... waterproofed escutcheon plate ø70 mm
Special, cross, limiting gate
Spring return, friction disc
Knob
KN... knob NW053
KG...ball handle with indicator V2A
DK...rotation knob(GN762.2 at NS00–F, GN526.1 at NS00–FA)
Switch sequence *)

*) Standard sequences see sheet S40/1, –/2, –/3. Special sequences please fillout preprinted form of NS00.

Spohn+Burkhardt
Elektrotechnische Fabrik Blaubeuren
Mauergasse 5
89143 BLAUBEUREN
GERMANY
Tel. +49 7344 171-0 info@spobu.de
Fax +49 7344 171-99 www.spobu.de

Controller VNS0–E, VNS0–V, steel enclosure IP54

Dimensions see sheet M 9/9

List 7 / 2014
9/9

Standard: 2 mm steel consols, front mounting

With replaceable double contacts and cam discs.
Rating see sheet 1/1



Drive arrangement		With transparent escutcheon plate (without engraving) without spring return	with spring return	Basic price EUR	+ each double contact EUR
N 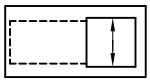	U 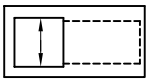	VNS04LF–E	VNS04LF–ER		
		VNS06LF–E	VNS06LF–ER		
		VNS09LF–E	VNS09LF–ER		
N 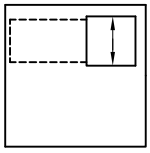	U 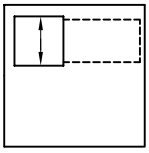	VNS03QF–E	VNS03QF–ER		
		VNS06QF–E	VNS06QF–ER		
		VNS09QF–E	VNS09QF–ER		
N 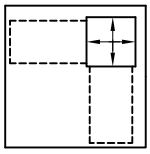	U 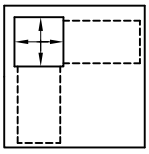	VNS03QF––V	VNS03QF––VR		
		VNS06QF––V	VNS06QF––VR		
Y 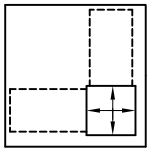	X 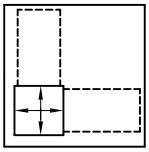	VNS09QF––V	VNS09QF––VR		

Additionals:

	EUR		EUR
Fitting in handle see sheet 2/1		Cross gate	KK
Engraving each word (max. 14 letters)		Special gate	SK
each symbol		Limiting gate	AK
Potentiometer on request		Special limiting gate	SAK
Synchro transmitter DGO see sheet 13/1		Friction brake	

Ordering example:

VNS0 3Q F N 11 14 18 SK KK AK V R H 40. 20

Engraving, type of potentiometer should be described.

- Type
- Steel box
- Front mounting
- Arrangement
- Shaft 110 140 180
- SK special gate
- KK cross gate
- AK limiting gate
- Drive arrangement
- Spring return
- Fitting in handle
- Circuit in view direction
- Circuit in cross direction

Spohn+Burkhardt
Elektrotechnische Fabrik Blaubeuren
Mauergasse 5
89143 BLAUBEUREN
GERMANY
Tel. +49 7344 171-0 info@spobu.de
Fax +49 7344 171-99 www.spobu.de

Controller VNS0–G, NS0–GG, VNS0–H, steel enclosure IP54

Dimensions see sheet M 9/10

List 7 / 2014
9/10

Standard: 2 mm steel consoles, front mounting (Base mounting without "F")

With replaceable double contacts and cam discs. Rating see sheet 1/1



Drive arrangement	With transparent escutcheon plate and rubber boot: without spring return	with spring return	Basic price EUR	+ each double contact EUR
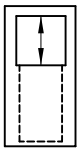	VNS04 LFG	VNS04 LFGR		
	VNS06 LFG	VNS06 LFGR		
	VNS09 LFG	VNS09 LFGR		
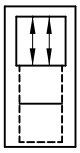	NS06 LFGG	NS06 LFGGR		
	NS09 LFGG	NS09 LFGGR		
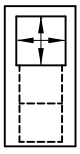	VNS06 LFH	VNS06 LFHR		
	VNS09 LFH	VNS09 LFHR		

Additionals:

	EUR
Fitting in handle see sheet 2/1	
Engraving each word (max. 14 letters)	
each symbol	

	EUR
Cross gate	KK
Special gate	SK
Limiting gate	AK
Special limiting gate	SAK
Friction brake	

Potentiometer attachment on request
Synchro transmitter DGO see sheet 13/1
Additional fittings see sheet 2/2A + 2/2B

Ordering example: VNS0 9LF 11/14/18 SK/KK/AK G R T 40.30

- Type
- Steel box 110
- Shaft 140 180
- SK special gate
- KK cross gate
- AK limiting gate
- Drive arrangement
- Spring return
- Fitting in handle
- Circuit in view direction
- Circuit in cross direction

Engraving, type of potentiometer should be described.

Spohn + Burkhardt
Elektrotechnische Fabrik Blaubeuren

Mauergasse 5
89143 BLAUBEUREN
GERMANY

Tel. +49 7344 171-0 info@spobu.de
Fax +49 7344 171-99 www.spobu.de



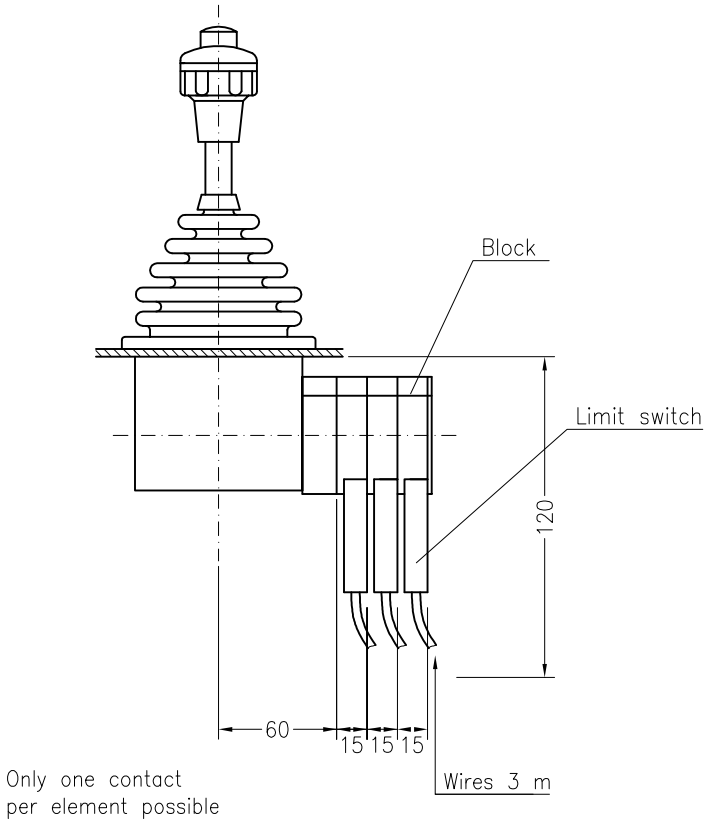

Only one contact
per element possible

The limit switch is fixed similar as our
standard contact elements to the block.

Contacts:

Limit switch, made Bartec:

Identification of limit switch
⟨Ex⟩ II 2G EEx d IIC T6
Inspection document PTB 00 ATEX 1093 X
Environmental temperature: −20 °C to +75 °C

Technical data:
Limit switch according to DIN EN60947−5−1
Protection limit switch IP66 IEC60947−5−1

Technical data:

normal voltage	used category	AC	400 V
(see DIN EN60947−5−1)	used category	AC−15 2 A	400 V
		DC−13 0,15 A	250 V

Potentiometer: in enclosure according EEx d IIC T6

Basic price drive block: See sheet 9/2, 9/3, 9/4, 9/5, 9/6, 9/8

EUR

Additional price:

Each 1 NO	07−2511−1520/62	cable length 5 m
Each 1 NC	07−2511−1510/62	cable length 5 m
Each 1 NO/1 NC	07−2511−1540/62	cable length 5 m
Each 1NO/NC	07−2511−1530/62	cable length 5 m
Each enclosed potentiometer (PW45 wire wound)		cable length 5 m
Each enclosed potentiometer (B55, conductive plastic)		cable length 5 m

On request: Potentiometer, EEx−d−push buttons, indicating lights, terminals, mounting in steel console.

Spohn+Burkhardt
Elektrotechnische Fabrik Blaubeuren

Mauergasse 5
89143 BLAUBEUREN
GERMANY

Tel. +49 7344 171-0 info@spobu.de
Fax +49 7344 171-99 www.spobu.de

Bevel wheel drive NS0–SFA

Dimensions see sheet M 9/12

List 7 / 2014
9/12



Degree of protection:
front side IP56
connection IP00
see water resistant

10 mio. cycles

maximal 16 A/400 V

1 circuit direction

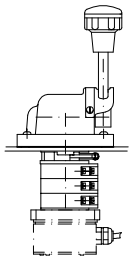

Without spring return
With front mounting
according to M 9/12

Regulations:
IEC60947–1
DIN EN60947–5–1
VDE 0660 part 200
Approbations:
CSA 15040
UL E106738(M)

Features:
Double contact elements and programmed notching discs exchangeable according to S 40/1 or client's requirement.
Notching disc suitable to circuit diagram (stepless or up to max. 7–0–7 steps available), handle, printable plate
Ratings according to sheet 1/1

Note:
If the circuit is unsym. it is necessary to stipulate the arrangement

Drive arrangement:

N

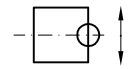

U

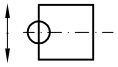

X



Y

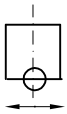

	basic price EUR	each silver double contact element (gold plated) EUR
NS0––SFA		
NS0–SFAR		

Fittings in handle	see sheet 3/2
Encoder	see sheet 15/...
Potentiometer	see sheet 14/...
Transmitter	see sheet 13/...

Additional prices for: EUR

Engraving each word (max. 14 letters)	
Drive console made of bronze	
Special notching disc	
Friction brake	B
Mechanical interlock	Z
" "	IZ

Ordering example:

K	NS0	2	N	11	SFA	R B	G22 Z IZ	20

- Gold plated contacts
- Type
- Double contacts
- Arrangement
- Shaft length 11=110 mm
- Drive arrangement
- Spring return/friction brake
- Fittings in handle
- Circuit

Note:
Special handle, engraving should be described

Spohn+Burkhardt
Elektrotechnische Fabrik Blaubeuren

Mauergasse 5
89143 BLAUBEUREN
GERMANY

Tel. +49 7344 171-0 info@spobu.de
Fax +49 7344 171-99 www.spobu.de

Controller NNS0F–PI, NNS0F–PIN

Dimensions see sheet M 9/13N

List 7 / 2014
9/13N



This robust and compact joy–stick controller NNS0F–PI(N) with lever strength 12 mm and reinforced mechanical drive is used for analogue controls. The conversion from lever deflection to electrical utilisable signals are realized by poten–tiometers.
Those may control active elec–trical interfaces as CAN, CAN–open, profibus–DP, 20 mA–4–20 mA, 6 V –12 V –18 V and magnetic valves.

Degree of protection front side IP54

Drive block / Circuit directions					With spring return: without 0–notching	With spring return: with light 0–notching	Basic–price EUR
Single axis (x, y)					NNS0–AK E–RPI	NNS0–AK E–RPIN	
Two axis (y, x)					NNS0–AK VRPI	NNS0–AK VRPIN	

Features:
- enclosed when equipped with electronic
- limiting gate (standard)
- clear escutcheon plate with legend foil

Potentiometer: Price with coupling inclusively.

		EUR
Poti 5–0–5 Kohm, 2 direction contacts, with center dead band	GLR55	
Poti 2,5–0–2,5 Kohm, 2 direction contacts, without center dead band	GLR5	

Additional price:

Cross gate	KK
Special gate	SK
Mechanical interlock 0–position	Z
Engraving (give clear text)	
Aluminium escutcheon plate black 96x96 mm	

Universal handle UG, UGN, UGD, UGA see sheet 3/...

Electronics	Type	Technical data see sheet	Add. price EUR
CAN–Bus acc. to STW–protocol 2.0B interface	ESS100	16/1	
CANopen interface for DS301 + DS401	ESS101–GTL	16/2	
Profibus–DP–interface	ESS094	16/3	
Current interface 20–4–20 mA	ESS089	16/23	
Voltage output 6 –12 –18 V	ESS098	16/21	
Voltage output max. 2 A, 24 VDC	ESS109	16/20	1 axis / 2 axis

Ordering example:

			EXRPI EYRPI EXRPIN EYRPIN							
	11	SK	VRPI	GLR55		GLR55				
NNS0F	14	KK	VRPIN	+ GLR5	.	GLR5	+ ESSxxx	+	UGA	
	18	AK								

- Type, front side
- Shaft 110, 140, 180 mm
- special–/cross–/limiting gate
- Drive
- Potentiometer in cross direction
- Potentiometer in view direction
- Electronics
- Universal handle

Note: universal handle UG... only available with shaft 110 mm

Spohn+Burkhardt
Elektrotechnische Fabrik Blaubeuren

Mauergasse 5
89143 BLAUBEUREN
GERMANY

Tel. +49 7344 171-0 info@spobu.de
Fax +49 7344 171-99 www.spobu.de



Controllers VNS2 with contacts for AC, and VNSB2 with contacts for DC can be supplied for single or combined operation.

The controllers VNS2 are characterized by their many drive arrangements.

All the operating blocks can supplied for front or base mounting.
The terminal are easily accessible from one side with both types of mounting.
All the controllers VNS2 can be manufactured with stayput or spring return up 7–0–7 switch positions.

Any switching sequence can be selected. See sheet S 40/... for suggested circuits.
Special circuits which may be required should be entered on the enclosed master transparencies.
The double contacts and cams can be detached with a screwdriver.

The normal gear ratio with controller VNS2 is 1:3,0 (lever deflection ±40°, rotation of cam discs ±120°).
Consequently precise switching sequences are possible with 7–0–7 switching positions as well.

Ratings see sheet 1/1. All types are available with permanent magnet for DC.
Synchro transmitter, potentiometer and encoder can be attached.

Black metallic escutcheon, engraving with word or symbol.

Spohn+Burkhardt
Elektrotechnische Fabrik Blaubeuren

Mauergasse 5
89143 BLAUBEUREN
GERMANY

Tel. +49 7344 171-0 info@spobu.de
Fax +49 7344 171-99 www.spobu.de

Controller VNS(B)2–E, VNS(B)2–V

Dimensions see sheet M 10/2A + M 10/2B

List 7 / 2014
10/2



Photo: Version with potentiometer and contacts

Max. 25 A 500 V
10 mio. cycles

Silver contacts (VNS0)
Gold plated
Silver contacts (KVNS2)
DC contacts (VNSB2)

Front side IP54
Connections side IP00
Lever 12 mm

Base mounting
according to sheet M 10/2B

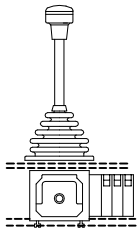

Front mounting
according to sheet M 10/2A

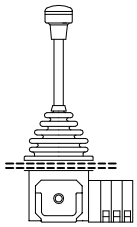

Regulations:
IEC60947–1
DIN EN60947–5–1
VDE 0660part 200

Features:
Double contact elements and programmed notching discs exchangeable according to sheet S 40/1 or client's requirement.
Notching disc suitable to circuit diagram (stepless or up to max. 7–0–7 steps available), handle, rubber boot, transparent escutcheon plate, legend foil.

Ratings according to sheet 1/1

	without spring return	with spring return	without spring return	with spring return	Basic price EUR	Each silver double contact element (DC) EUR
Drive arrangement E 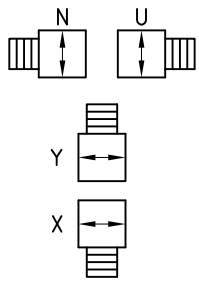	VNS(B)2–N–E VNS(B)2–U–E VNS(B)2–Y–E VNS(B)2–X–E		VNS(B)2–FN–E VNS(B)2–FU–E VNS(B)2–FY–E VNS(B)2–FX–E			
		VNS(B)2–N–ER VNS(B)2–U–ER VNS(B)2–Y–ER VNS(B)2–X–ER		VNS(B)2–FN–ER VNS(B)2–FU–ER VNS(B)2–FY–ER VNS(B)2–FX–ER		
Drive arrangement V 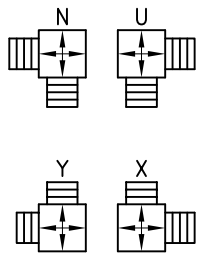	VNS(B)2––N–V VNS(B)2––U–V VNS(B)2––Y–V VNS(B)2––X–V		VNS(B)2––FN–V VNS(B)2––FU–V VNS(B)2––FY–V VNS(B)2––FX–V			
		VNS(B)2––N–VR VNS(B)2––U–VR VNS(B)2––Y–VR VNS(B)2––X–VR		VNS(B)2––FN–VR VNS(B)2––FU–VR VNS(B)2––FY–VR VNS(B)2––FX–VR		

Additionals:

Fitting in handle	see sheet 2/...
Universal, special handle	see sheet 3/...
Encoder	see sheet 15/...
Potentiometer	see sheet 14/...
Transmitter	see sheet 13/...

Additional prices for:

	Type:
Engraving each word (max. 14 letters)	
Brass bracket	M
Limiting gate	AK
Cross gate	KK
Special gate	SK
Special notching disc	
Friction brake per axis	B

Ordering:

M	K	VNS2 VNSB2	2	3	F	N	18 22 28	SK KK AK	V	R B	HZ	9P1.	40	+	PQ55 . PQ22

- Brass bracket
- Contacts gold–plated
- Silver contacts/DC contacts
- Double contact in view direction
- Double contact in cross direction
- Front mounting
- Arrangement
- Shaft 180/220/280 mm
- Special/cross/ limiting gate
- Drive arrangement
- R=Spring return/B=Friction brake
- Fitting in handle
- Circuit in view direction
- Circuit in cross direction
- Potentiometer in cross direction
- Potentiometer in view direction

Note:
* Special handle and engraving should be described clearly
* If the circuit is unsymetric it is necessary to stipulate the arrangement

Spohn+Burkhardt
Elektrotechnische Fabrik Blaubeuren

Mauergasse 5
89143 BLAUBEUREN
GERMANY

Tel. +49 7344 171-0 info@spobu.de
Fax +49 7344 171-99 www.spobu.de

Controller VNS2–G, VNS2–H

Dimensions see sheet M 10/2B + M 10/3

List 7 / 2014
10/3

With replaceable double contacts
and cam discs

Rating see sheet 1/1

Standard circuit see sheet S 40/1 ect.
or on request

With metallic escutcheon plate (without engraving)
and rubber boots
VNS2 contacts for AC–VNSB2 contacts for DC



	Dimensions M 10/2B Base mounting		Dimensions M 10/3 Front mounting		Basic price	
	without spring return	with spring return	without spring return	with spring return	EUR	
Drive arrangement G 	VNS(B)2–G		VNS(B)2–FG			EUR
		VNS(B)2–GR		VNS(B)2–FGR		EUR
Drive arrangement H 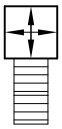	VNS(B)2––H		VNS(B)2––FH			
		VNS(B)2––HR		VNS(B)2––FHR		

+each double contact for AC
+ each double contact with perm. magnet for DC

Additionals: EUR

Fitting in handle see sheet 2/1B
Engraving each word (max. 14 letters)
each symbol
Potentiometer attachment see sheet 14/...
(Arrangement H only for view direction)
Synchro transmitter DGO see sheet 13/1
Encoder see sheet 15/11...

Type:	EUR
Cross gate	KK
Special gate	SK
Limiting gate	AK

Ordering example:

			VNS2					SK						
M	K	VNSB2	2	3	F	22	KK	H	R	HZ	20	40	Engraving, type of potentiometer should be described.
						28	AK						

Brass bracket
Contacts gold–plated
standard contacts
Contact for DC
Double contact in view direction
Double contact in cross direction
Front mounting
Shaft
special/cross/limiting gate
Drive arrangement
Spring return
Fitting in handle
Circuit in view direction
Circuit in cross direction

Spohn + Burkhardt
Elektrotechnische Fabrik Blaubeuren

Mauergasse 5
89143 BLAUBEUREN
GERMANY

Tel. +49 7344 171-0 info@spobu.de
Fax +49 7344 171-99 www.spobu.de

Controller VNS(B)2–A, VNS(B)2–AA, VNS(B)2–EA

Dimensions see sheet M 10/4

List 7 / 2014
10/4



Photo: Version with potentiometer and contacts

Max. 25 A 500 V
10 mio. cycles

Silver contacts
Gold plated Silver contacts (K)
DC contacts (B)

Front side IP54
Connections side IP00
Lever 12 mm

Front mounting according to sheet M 10/4
Demenstration is: VNS(B)2–EA

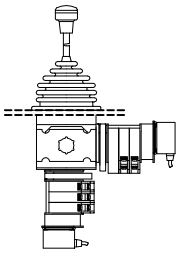

Regulations:
IEC60947–1
DIN EN60947–5–1
VDE 0660 part 200

Features:
Double contact elements and programmed notching discs exchangeable according to sheet S 40/1 or client's requirement.
Notching disc suitable to circuit diagram (stepless or up to max. 7–0–7 steps available), handle, rubber boot, transparent escutcheon plate, legend foil.

Ratings according to sheet 1/1

	without spring return	with spring return	Basic price EUR	Each silver double contact element EUR
Drive arrangement A 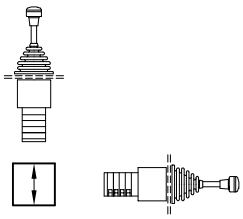	VNS(B)2–A	VNS(B)2–AR		
Drive arrangement AA 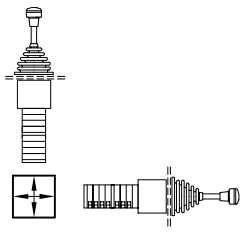	VNS(B)2––AA	VNS(B)2––AAR		
Drive arrangement EA 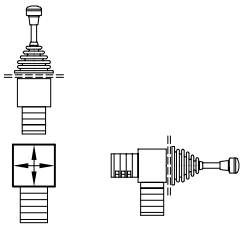	VNS(B)2––EA	VNS(B)2––EAR		

Potentiometer attachment for view direction

Additionals:

Fitting in handle	see sheet 2/...
Universal, special handle	see sheet 3/...
Encoder	see sheet 15/...
Potentiometer	see sheet 14/...

Additional prices for:

Engraving each word (max. 14 letters)	M
Brass bracket	AK
Limiting gate	KK
Cross gate	SK
Special gate	
Special notching disc	
Friction brake per axis	B

Ordering example:

M	K	VNS2 / VNSB2	2	2	18 / 22 / 28	SK / KK / AK	AA	R / B	T	4P0. 9P1 + PQ55 . PQ22

- Brass bracket
- Contacts gold–plated
- Silver contacts/DC contacts
- Double contact in view direction
- Double contact in cross direction
- Shaft 180/220/280 mm
- Special/cross/ limiting gate
- Drive arrangement
- Spring return
- Fitting in handle
- Circuit in view direction
- Circuit in cross direction
- Potentiometer in cross direction
- Potentiometer in view direction

Note:

* Special handle and engraving should be described clearly

Spohn+Burkhardt
Elektrotechnische Fabrik Blaubeuren

Mauergasse 5
89143 BLAUBEUREN
GERMANY

Tel. +49 7344 171-0 info@spobu.de
Fax +49 7344 171-99 www.spobu.de

Controller NS2–GG

Dimensions see sheet M 10/5A + M 10/5B

List 7 / 2014
10/5

Controller for front mounting,
with replaceable double contacts and cam discs.
Max. 7–0–7 steps, IP00
Rating see sheet 1/1
Standard–circuit see sheet S 40/1

With metallic escutcheon plate (without engraving) and rubber boots
NS2 contacts for AC
NSB2 contacts for DC

	without spring return	with spring return	Basic price	
Drive arrangement GGH dimensions M 10/5A	NS(B)2–GGH	NS(B)2–GGHR		EUR
Drive arrangement GGAA dimensions M 10/5A	NS(B)2––GGAA	NS(B)2––GGAAR		EUR
Drive arrangement GGEA dimensions M 10/5B	NS(B)2––GGEA	NS(B)2––GGEAR		+ each double contact for AC + each double contact with perm. magnets for DC



Potentiometer only for one operating handle

Potentiometer only for one operating handle

Potentiometer possible for both operating handles

Additionals: EUR

Fitting in handle see sheet 2/1B
T–handle G2–NS2 see sheet 3/8

Engraving each word (max. 14 letters)
each symbol
Potentiomater attachment see sheet 14/...
(Arrangement GGH + GGAA only for view direction)
Synchro transmitter DGO see sheet 13/1
Encoder see sheet 15/11...

Ordering example:

			NS2			22					
M	K	NSB2	3	2	28	GG	R	HU	40	12	

- Brass bracket
- Contacts gold–plated
- standard contacts / Contact for DC
- Double contact in view direction
- Double contact in cross direction
- Shaft
- Drive arrangement
- Spring return
- Fitting in handle
- Circuit in view direction
- Circuit in cross direction

Engraving,
type of potentiometer,
gate or T–handle
should be described.

Spohn + Burkhardt
Elektrotechnische Fabrik Blaubeuren

Mauergasse 5
89143 BLAUBEUREN
GERMANY

Tel. +49 7344 171-0 info@spobu.de
Fax +49 7344 171-99 www.spobu.de

With replaceable double contacts,
cam discs, escutcheon plate
and rubber boot.
Standard circuit see sheet S 40/1 ect.
Rating see sheet 1/1



Terminals on top	Terminals below	Basic price Spring return without EUR	Basic price Spring return with EUR
VNS(B)2–KE VNS(B)2–KER	VNS(B)2–FKE VNS(B)2–FKER		
VNS(B)2–KG VNS(B)2–KGR	VNS(B)2–FKG VNS(B)2–FKGR		
VNS(B)2––KH VNS(B)2––KHR	VNS(B)2––FKH VNS(B)2––FKHR		
NS(B)2––KGGH NS(B)2––KGGHR	NS(B)2––FKGGH NS(B)2––FKGGHR		

+ each double contact for AC EUR
+ each double contact with perm. magnets for DC EUR

+ each double contact for AC EUR
+ each double contact with perm. magnets for DC EUR

Additionals: EUR

Fitting in handle see sheet 2/1B
Engraving each word (max. 14 letters)
each symbol

Potentiomater attachment or encoder on request.
Synchro transmitter DGO see sheet 13/1

Type:	EUR
For operating block KH:	
Cross gate	KK
Special gate	SK
Limiting gate	AK

Ordering example: M K VNS2 3 4 F K 22 SK KK H R T 40 50
VNSB2 28 AK

- Brass bracket
- Contacts gold–plated
- Standard contacts / DC contacts
- Double contact in view direction
- Double contact in cross direction
- Front mounting
- Arrangement
- Shaft
- Special/cross/ limiting gate
- Drive arrangement
- Spring return
- Fitting in handle
- Circuit in view direction
- Circuit in cross direction

Engraving,
type of potentiometer
should be described.

Spohn+Burkhardt
Elektrotechnische Fabrik Blaubeuren

Mauergasse 5
89143 BLAUBEUREN
GERMANY

Tel. +49 7344 171-0 info@spobu.de
Fax +49 7344 171-99 www.spobu.de

Switch type NS2 with knob– or ball handle

Dimensions see sheet M 10/7A + M 10/7B

List 7 / 2014
10/7



Switch without escutcheon plate,
without ball handle,
see sheet M 10/7A

With replaceable contacts and cam discs
Rating see sheet 1/1

Number of double contact elements	Without spring return Type	EUR	With spring return Type	EUR
1	NS 201		NS 201 R	
2	NS 202		NS 202 R	
3	NS 203		NS 203 R	
4	NS 204		NS 204 R	
5	NS 205		NS 205 R	
6	NS 206		NS 206 R	
7	NS 207		NS 207 R	
8	NS 208		NS 208 R	
9	NS 209		NS 209 R	
10	NS 2010		NS 2010 R	

Switch with escutcheon plate 96x96 mm
with 3 engravings and handle (silumin) 1)
see sheet M 10/7A

1	NS 201 F		NS 201 FR	
2	NS 202 F		NS 202 FR	
3	NS 203 F		NS 203 FR	
4	NS 204 F		NS 204 FR	
5	NS 205 F		NS 205 FR	
6	NS 206 F		NS 206 FR	
7	NS 207 F		NS 207 FR	
8	NS 208 F		NS 208 FR	
9	NS 209 F		NS 209 FR	
10	NS 2010 F		NS 2010 FR	

Switch with waterproofed escutcheon platte
ø100 mm with 3 engravings and handle (silumin)
see sheet M 10/7A

1	NS 201 FOD		NS 201 FODR	
2	NS 202 FOD		NS 202 FODR	
3	NS 203 FOD		NS 203 FODR	
4	NS 204 FOD		NS 204 FODR	
5	NS 205 FOD		NS 205 FODR	
6	NS 206 FOD		NS 206 FODR	
7	NS 207 FOD		NS 207 FODR	
8	NS 208 FOD		NS 208 FODR	
9	NS 209 FOD		NS 209 FODR	
10	NS 2010 FOD		NS 2010 FODR	

Cast enclosure IP56 (silumin) with handle, see sheet M 10/7B

No. of double contact elements	With stayput	EUR	With anti condensation heater and emergency stop	EUR	With spring return	EUR	With spring return, anti condensation heater and emergency stop	EUR
1 2	NS 207A G1 NS 207A G2		NS 207A GZP1 NS 207A GZP2		NS 207A GR1 NS 207A GR2		NS 207A GRZP1 NS 207A GRZP2	
3 4	NS 207A G3 NS 207A G4		NS 207A GZP3 NS 207A GZP4		NS 207A GR3 NS 207A GR4		NS 207A GRZP3 NS 210A GRZP4	
5 6	NS 207A G5 NS 207A G6		NS 207A GZP5 NS 210A GZP6		NS 207A GR5 NS 210A GR6		NS 210A GRZP5	
7 8	NS 210A G7 NS 210A G8							
9	NS 210A G9							
			Without heater				Without emergency stop	
				EUR				EUR

Potentiometer attachment on request
Additional price each double contact element
with permanent magnet DC type NSB 2...

Engraving each symbol
each word

1) Less for knob operator

Spohn+Burkhardt
Elektrotechnische Fabrik Blaubeuren

Mauergasse 5
89143 BLAUBEUREN
GERMANY

Tel. +49 7344 171-0 info@spobu.de
Fax +49 7344 171-99 www.spobu.de

Standard:
2 mm steel consoles, front mounting.
Steel enclosure IP54

With replaceable double contacts and cam discs.

Rating see sheet 1/1



Photo:
VNS29QF––V

With metallic escutcheon plate (without engraving) and rubber boots
VNS2 contacts for AC
VNSB2 contacts for DC

Drive arrangement		without spring return	with spring return	Basic price EUR
N	U	VNS(B)26LF–E	VNS(B)26LF–ER	
		VNS(B)29LF–E	VNS(B)29LF–ER	
		VNS(B)214LF–E	VNS(B)214LF–ER	
N	U	VNS(B)24QF–E	VNS(B)24QF–ER	
		VNS(B)26QF–E	VNS(B)26QF–ER	
		VNS(B)29QF–E	VNS(B)29QF–ER	
N	U	VNS(B)24QF––V	VNS(B)24QF––VR	
		VNS(B)26QF––V	VNS(B)26QF––VR	
Y	X	VNS(B)29QF––V	VNS(B)29QF––VR	

+ each double contact for AC EUR
+ each double contact with perm. magnet for DC EUR

Additionals:

		EUR
Fitting in handle see sheet 2/1B		
Engraving	each word (max. 14 letters)	
	each symbol	

Encoder or potentiometer attachment on request.
Synchro transmitter DGO see sheet 13/1
Buttons see sheet 2/2A + 2/2B

Type:	EUR
Cross gate	KK
Special gate	SK
Limiting gate	AK

Ordering example: M K VNS2 / VNSB2 6QF N 22 / 28 SK / KK / AK V R H 40 20

- Brass bracket
- Contacts gold-plated
- Standard contacts / DC contacts
- Steel box
- Arrangement
- Shaft
- Special/cross/ limiting gate
- Drive arrangement
- Spring return
- Fitting in handle
- Circuit in view direction
- Circuit in cross direction

Engraving, base mounting which may be required should be described.

Spohn+Burkhardt
Elektrotechnische Fabrik Blaubeuren

Mauergasse 5
89143 BLAUBEUREN
GERMANY

Tel. +49 7344 171-0 info@spobu.de
Fax +49 7344 171-99 www.spobu.de

Controller VNS2–G, NS2–GG, VNS2–H

Dimensions see sheet M 10/9

List 7 / 2014
10/9

Standard:
2 mm steel consoles,
front mounting.
Steel enclosure IP54

With replaceable
double contacts and
cam discs.

Rating see sheet 1/1



Drive arrangement		without spring return	with spring return	Basic price EUR	
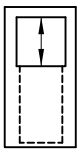	Drive arrangement G	VNS(B)26LG	VNS(B)26LGR		EUR EUR
		VNS(B)29LG	VNS(B)29LGR		
		VNS(B)214LG	VNS(B)214LGR		
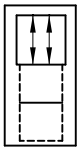	Drive arrangement GG	NS(B)26LGG	NS(B)26LGGR		
		NS(B)29LGG	NS(B)29LGGR		
		NS(B)214LGG	NS(B)214LGGR		
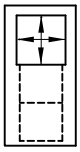	Drive arrangement H	VNS(B)26LH	VNS(B)26LHR		
		VNS(B)29LH	VNS(B)29LHR		
		VNS(B)214LH	VNS(B)214LHR		

With metallic escutcheon plate (without engraving) and rubber boots
VNS2 contacts for AC
VNSB2 contacts for DC

+ each double contact for AC
+ + each double contact with perm. magnet for DC

Additionals: EUR

Fitting in handle see sheet 2/1B
Engraving each word (max. 14 letters)
each symbol

Potentiometer or encoder attachment on request.
Synchro transmitter DGO see sheet 13/1

Type:	EUR
Cross gate	KK
Special gate	SK
Limiting gate	AK

Ordering example: M K VNS2 6L 22 SK G R T 40 30
VNSB2 28 KK AK

- Brass bracket
- Contacts gold–plated
- Standard contacts / DC contacts
- Steel box
- Shaft
- Special/cross/ limiting gate
- Drive arrangement
- Spring return
- Fitting in handle
- Circuit in view direction
- Circuit in cross direction

Engraving,
type of potentiometer
should be described.

Spohn+Burkhardt
Elektrotechnische Fabrik Blaubeuren

Mauergasse 5
89143 BLAUBEUREN
GERMANY

Tel. +49 7344 171-0 info@spobu.de
Fax +49 7344 171-99 www.spobu.de

Controller NS2–KA, heavy duty

Dimensions see sheet M 10/10

List 7 / 2014
10/10



	Type:	EUR
Without spring return	NS2...KA	
With spring return	NS2...KAR	
+ each double contact for	AC	
+ each double contact with permanent magnet for	DC	
Mechanical interlock	Z	

Handle type B see sheet 3/5

Handle UG or UGN see sheet 3/3

Potentiometer couplings and potentiometer see sheet 14/...

Encoders see sheet 15/11...

Ordering example:

NS2 NSB2– KA	R	Z	B UG	40

No. of double contacts
Spring return
Mechanical interlock
Handle UG
Handle B
Circuit

Spohn+Burkhardt
Elektrotechnische Fabrik Blaubeuren

Mauergasse 5
89143 BLAUBEUREN
GERMANY

Tel. +49 7344 171-0 info@spobu.de
Fax +49 7344 171-99 www.spobu.de

Drive/Brake controller FBS-01

Dimensions see sheet M 11/1 + M 11/2

List 7 / 2014
11/1

Drive and brake controllers are used for rail traffic applications.



Features

- compact design in modular construction system for various installations
- cam axis with ball bearing in order to reduce operator's force and to ensure sensitive operations
- contact circuits with spring return, stay put as well as stepless operations
- snap switches or cam-switched elements for safe contacts
- direct coupling of encoder OERH with current- and/or 8 bit code output
- handles in various forms
- additional functions inserted in handles e.g. horn, deadman...

Options

- contact circuits, dimensions according to client's request
- wiring onto terminals or plug and socket system
- engraved front plate
- client-specific handles

This drive and brake controller, applicable for various operations, was especially designed in order to keep maintenance costs low.

Spohn+Burkhardt
Elektrotechnische Fabrik Blaubeuren

Mauergasse 5
89143 BLAUBEUREN
GERMANY

Tel. +49 7344 171-0 info@spobu.de
Fax +49 7344 171-99 www.spobu.de

Synchro transmitter DGO

List 7 / 2014
13/1

Use: Can be fitted to controller VNS0, NNS0 or VNS2.



Features: Small space requirement, direct connection to controller contact system without special couplings.

Description: The principle of the design in magnetic to provide a contactless system.
The rotary magnetic inductive coupling gives the highest operating life.
Primary and secondary coils are separately epoxy encapsulated.
Angle of rotation ±100° till 120°.
From 0 to 20° a small output voltage change is achieved giving safety during inital contact closure.
This also allows to operate at slow speeds.

Arrangement:

e.g. drive H

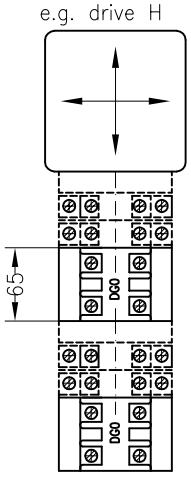

Technical data:

Input: at Zero position 5 VA
at Zero position 19 VA

Output: maximum load 3 VA

Voltage: Primary: 115 or 230 V, 50 or 60 Hz
Secondary: 50 V

Weight: 0,65 kg

Circuit diagram:



Characteristic curve:

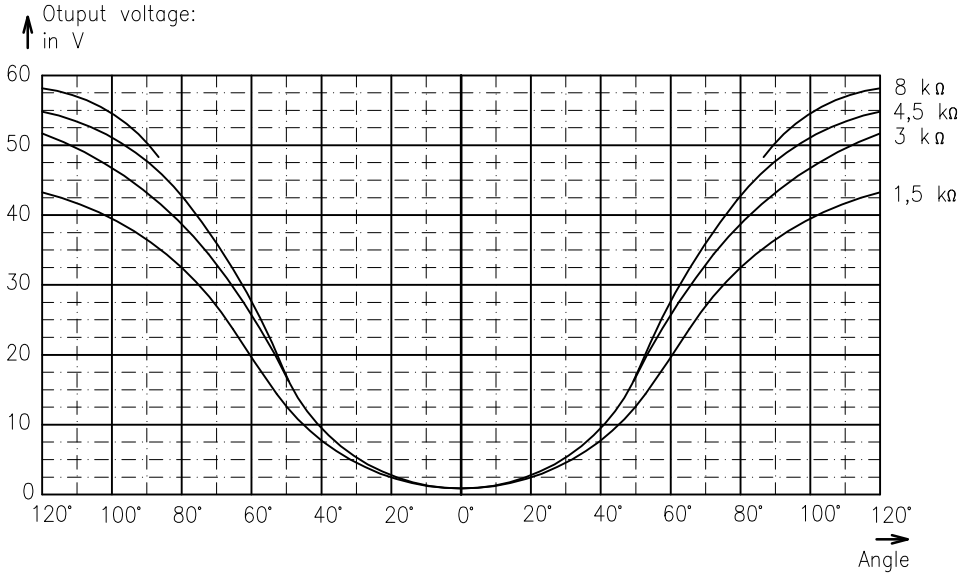

Versions:	Type:	SPOBU–Id.–Nr.:	EUR
Primary 115 V, secondary 50 V, 50/60 Hz	DGO 115/50	13763	
Primary 230 V, secondary 50 V, 50/60 Hz	DGO 230/50	13764	

Spohn+Burkhardt
Elektrotechnische Fabrik Blaubeuren

Mauergasse 5
89143 BLAUBEUREN
GERMANY

Tel. +49 7344 171-0 info@spobu.de
Fax +49 7344 171-99 www.spobu.de

Use: Stepless rated values for VNS0, NNS0 or VNS2 controllers.

Features: Small space requirement, direct connection to controller contact system without special couplings.

Description: The principle of the design in magnetic is to provide a contactless system.
The rotary magnetic inductive coupling gives the highest operating life.
Primary and secondary coils are separately epoxy encapsulated .
Angle of rotation ±100° till 120°.

Input: Approx. 5 Watt

Voltage: Primary: 115 V or 230 V, 50 Hz or 60 Hz
Secondary : 50 V, other voltages on request (230/115 V/50 Hz transformer to be switched in series)

Output voltage: See characteristic curve (voltage at evaluation ESS030)

Weight: DDG0 0,65 kg
ESS030 0,2 kg

Connection:

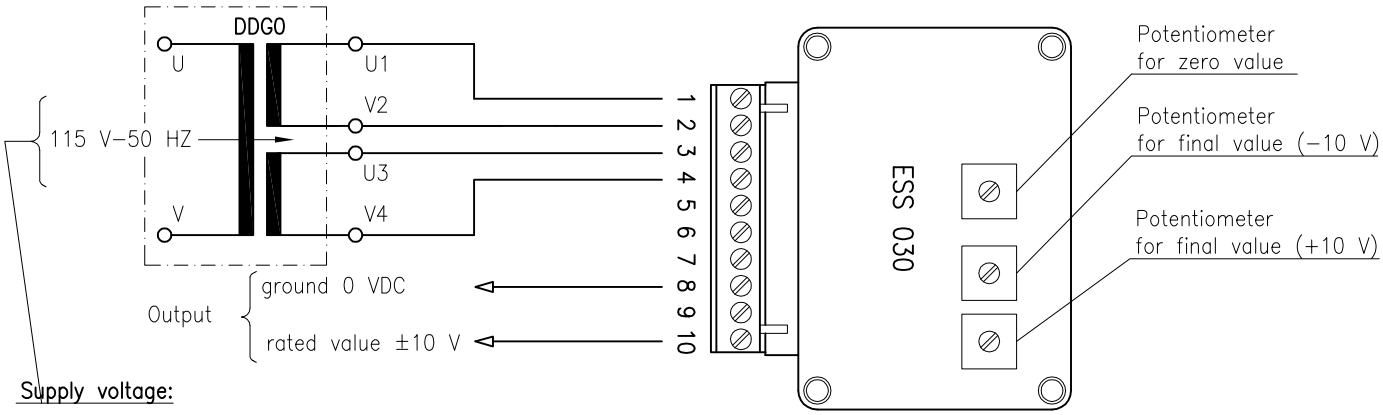

Characteristic:

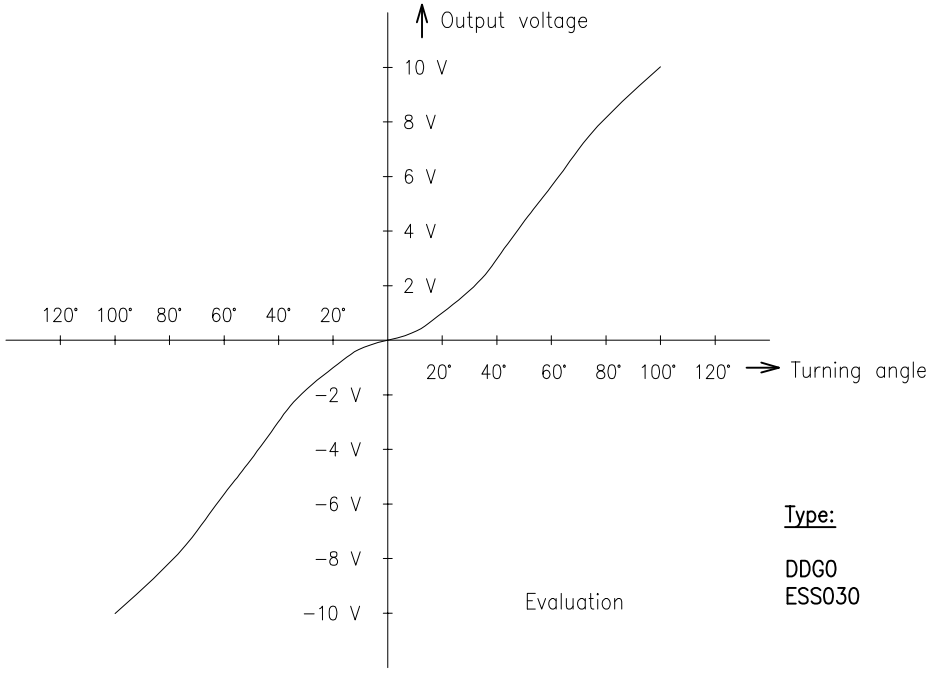

Type: EUR

DDG0
ESS030

Spohn + Burkhardt
Elektrotechnische Fabrik Blaubeuren
Mauergasse 5
89143 BLAUBEUREN
GERMANY
Tel. +49 7344 171-0 info@spobu.de
Fax +49 7344 171-99 www.spobu.de

Common: resistance tolerance ±5% wirewound wiper current max. 100 mA	Schematic:	Ohmic value R	Type	Spobu Id.Nr.	EUR	Additional price for mount on controller each potentiometer EUR M0	VCS0	VNS0	NNS0	VNS2
PD550–S233 10 mio. cycles 3 Watt by 20 °C squared hole 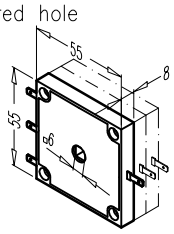	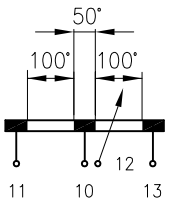	600R–0–600R 1 k–0–1 k 1k5–0–1k5 2 k–0–2 k 2k5–0–2k5 3 k–0–3 k 5 k–0–5 k 10 k–0–10 k	PQ0606 PQ11 PQ1.51.5 PQ22 PQ2.52.5 PQ33 PQ55 PQ1010	10849 11437 11892 11786 10847 11893 12072 11894						
PD550–S286 10 mio. cycles 3 Watt by 20 °C squared hole 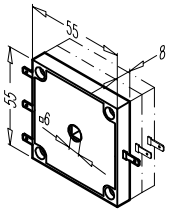	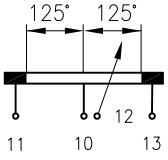	500R–500R 1 k–1 k 1k5–1k5 2k5–2k5 5 k–5 k 10 k–10 k	PQS0505 PQS11 PQS1.51.5 PQS2.52.5 PQS55 PQS1010	10848 17791 10843 12028 12120 10846						
PW55/01d–SM 7206–17A 10 mio. cycles 3 Watt by 20 °C squared hole 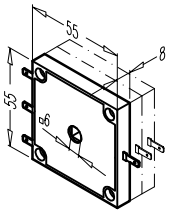	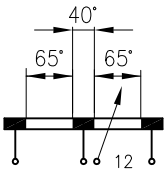	2k5–0–2k5 5 k–0–5 k	PQN2.52.5 PQN55	20579 32685						
PW55/01d–SM 7206–17B 10 mio. cycles 3 Watt by 20 °C squared hole 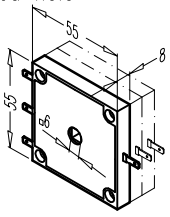	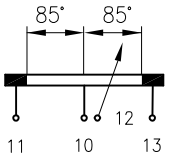	5 k–5 k	PQNS55	25360						
PD 200–S237 2 mio. cycles 2 Watt by 20 °C with centre mounting **PZxx:** 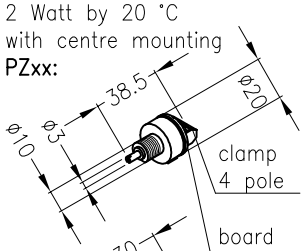 **PZAxx:** 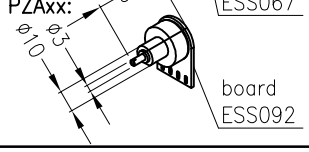	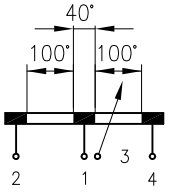 version K with board ESS092 and clamp, 4 pole	1 k–0–1 k 2 k–0–2 k 5 k–0–5 k 10 k–0–10 k 1 k–0–1 k 2 k–0–2 k 5 k–0–5 k 10 k–0–10 k 1 k–0–1 k 2 k–0–2 k 5 k–0–5 k 10 k–0–10 k	PZ11 PZ22 PZ55 PZ1010 PZA11 PZA22 PZA55 PZA1010 PZA11K PZA22K PZA55K PZA1010K	20969 20970 20971 20972						

Spohn+Burkhardt
Elektrotechnische Fabrik Blaubeuren

Mauergasse 5
89143 BLAUBEUREN
GERMANY

Tel. +49 7344 171-0 info@spobu.de
Fax +49 7344 171-99 www.spobu.de

Model	Schematic:	Ohmic value	Type	Spobu Id.-Nr.	EUR	additional price for mounting on controller each poti EUR VCS0	VNS0	NNS0	VNS2
PW70 10 mio. rotations 6 Watt by 20 °C wire wound wiper current max. 120 mA resistance tolerance ±1% max. connecting load 60 V 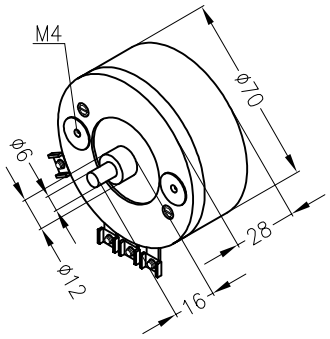	**PW70-SM 7206-L** 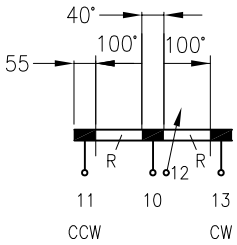	540R-0-540R 1030R-0-1030R 5 k-0-5 k 10 k-0-10 k	PF0505 PF11 PF55 PF1010	11428 11968 11765 12011					
		5 k-0-5 k oil filled	PFÖ55	11729					
	PW70d -SM7206-D1 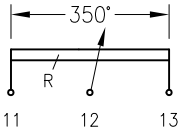	1 k 5 k 10 k	PFS1 PFS5 PFS10	17384 12470 23418					
DP60 1 mio. rotations 50 Watt by 20 °C wire wound with centre mounting max. wiper current see ohmic values resistance tolerance ±5% 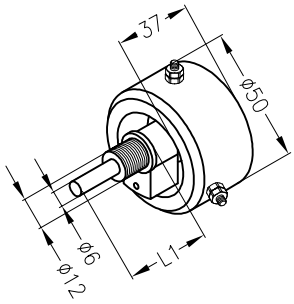 standard L1=26 mm * by 15134 L1=19 mm	**DP60-SM7206-03** 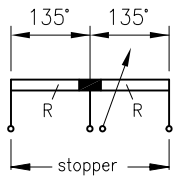	10R-0-10R * 10R-0-10R 25R-0-25R 50R-0-50R 80R-0-80R 120R-0-120R		15134 12338 14796 14303 12583 12352					
PW0045 10 mio. rotations 1,5 Watt by 20 °C wiper current max. 120 mA resistance tolerance ±5% max. connecting load 24 V operating temperature -50 °C..+80 °C solder connections sleeve bearing 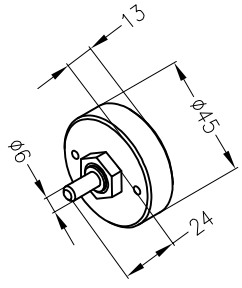	**PW0045** 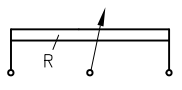	5 k-90°		16999		additional price for mounting foot pedal / foot rocker incl. potentiometer FT0	FST		FW0
		1 k-345° 5 k-345° 10 k-345°		17790 16403 17538					
	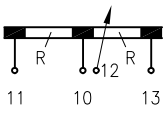	1 k-0-1 k 90°-10°-90°		17541					
		5 k-0-5 k 90°-10°-90°		14969					
		10 k-0-10 k 90°-10°-90°		17546					

Spohn+Burkhardt
Elektrotechnische Fabrik Blaubeuren

Mauergasse 5
89143 BLAUBEUREN
GERMANY

Tel. +49 7344 171-0 info@spobu.de
Fax +49 7344 171-99 www.spobu.de

Model	Schematic:	Ohmic value R	Type	Spobu Id.–Nr.		additional price for mount on foot switch FST inclusive potentiometer EUR
0621–013 cermet coat 2 W at 85 °C linear characteristic solder connections 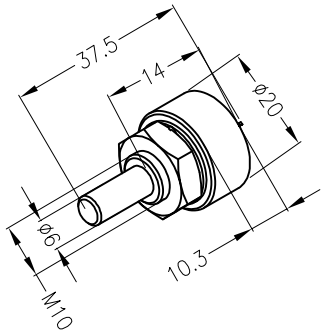 	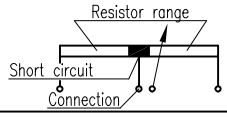 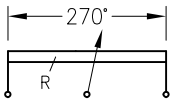 	1 k 4k7 10 k	R1K R5K R10K	17520 13650 15435		

Spohn+Burkhardt
Elektrotechnische Fabrik Blaubeuren

Mauergasse 5
89143 BLAUBEUREN
GERMANY

Tel. +49 7344 171-0 info@spobu.de
Fax +49 7344 171-99 www.spobu.de

Model	Schematic:	Ohmic value		SPOBU Id.–Nr.	EUR	additional price for mount on controller VNS0 EUR
EExd–PL310 explosion protection degree of protection: II 2G EEx d IIC T6 approval: PTB 03 ATEX 1026 conductive plastic mechanical life: 10 mio. cycles resistance tolerance ±20% centre tap connection cable 5 m 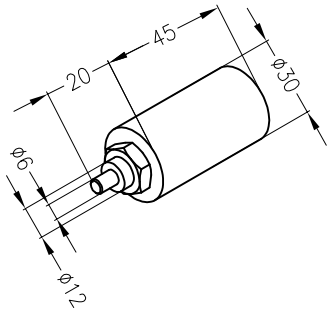 	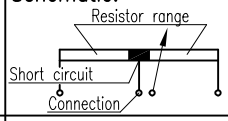 	5 k–0–5 k		16465		

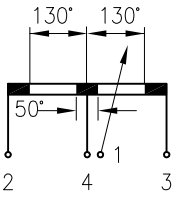

1=wiper
2=start
3=end
4=center tap

Spohn+Burkhardt
Elektrotechnische Fabrik Blaubeuren

Mauergasse 5
89143 BLAUBEUREN
GERMANY

Tel. +49 7344 171-0 info@spobu.de
Fax +49 7344 171-99 www.spobu.de

Note for the application of conductive potentiometers:

* application of potentiometer as voltage devider without wiper load
* recommended operational current in wiper circuit = 0,1 µA
* maximal power rating 0,5 W/40 °C
* maximal wiper current at failure 1 mA
* maximal voltage supply Umax(V) = $\sqrt{P(W) \times R(\Omega)}$, max. 40 V

Common: mechanical life: 10 mio. cycles resistance tolerance ±20 % with centre tap	Schematic: 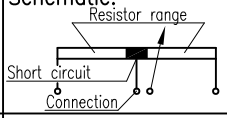	Ohmic value	Type	Spobu Id.Nr.	EUR	additional price for coupling EUR ST0 ST1	M0 VCS0	CS1	VNS0 NNS0 VNS2	NS3
Version G...: central fixing board ESS084 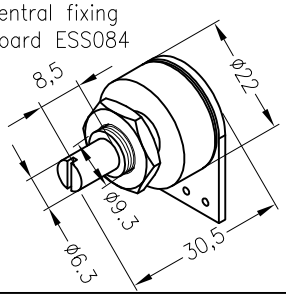	S406 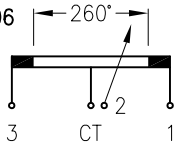	5 k	G5	20513						
	S256 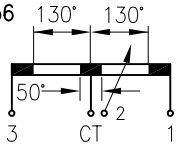	5 k–0–5 k	G55	20514						
Version B...: servo–flange board ESS084 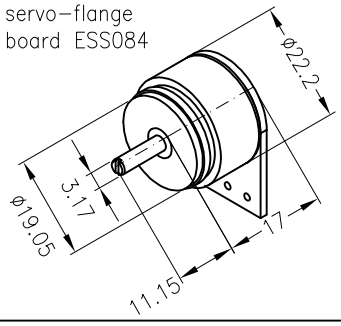	S406 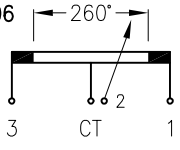	1 k 5 k 10 k	B1 B5 B10	20507 20508 20509						
	S256 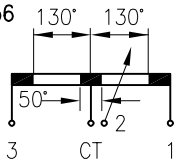	1 k–0–1 k 5 k–0–5 k 10 k–0–10 k	B11 B55 B1010	20510 20511 20512						
Version M...: central fixing integrated connection board 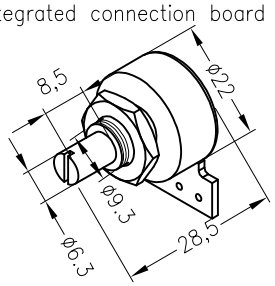	SM7206–30 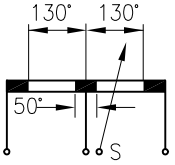	5 k–0–5 k	M55	23377						
Version M...: servo–flange integrated connection board 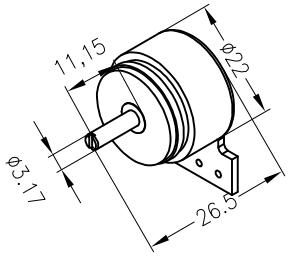	SM7206–30–S 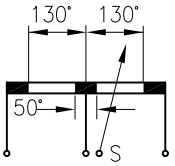	5 k–0–5 k	M55S	30929						
4–pole, case GG with plug ST for above mentioned potentio–meters 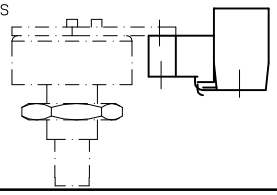	GG=MSTBA 2,5/4–G ST=MSTBT 2,5/4–ST		accessory type –K	additional price EUR						

Spohn+Burkhardt
Elektrotechnische Fabrik Blaubeuren

Mauergasse 5
89143 BLAUBEUREN
GERMANY

Tel. +49 7344 171-0 info@spobu.de
Fax +49 7344 171-99 www.spobu.de

Note for the application of conductive potentiometers:

* maximal wiper current 1 mA
* maximal power rating 0,5 W/40 °C
* maximal voltage supply Umax(V) = $\sqrt{P(W) \times R(\Omega)}$
* recommendation: application of potentiometer as voltage devider without wiper load
* load of direction switches: see wiper circuit

Features:

10 mio. cycles
Conductive plastic with centre tap and direction contacts.
Resistance tolerance ±20%

Plug connection: AMP7-215083-8

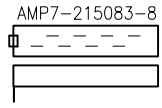

Ohmic value	Type	Spobu Id.-Nr.	EUR	Additional price for mount on controller						
				M0	VCS0	CS1	VNS0	NNS0	VNS2	NS3
5 k	BLR5	13009								
5 k	GLR5	12688								
5 k-0-5 k	BLR55	23269								
5 k-0-5 k	GLR55	23268								
5 k-0-5 k	GDLR55	27316		For handle UGA with twist operation						

PL332

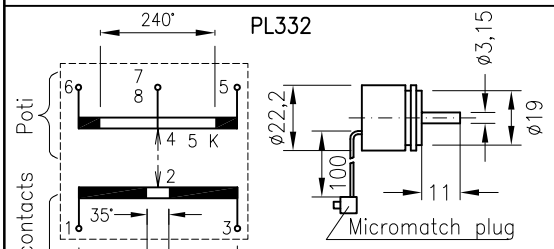

PL322

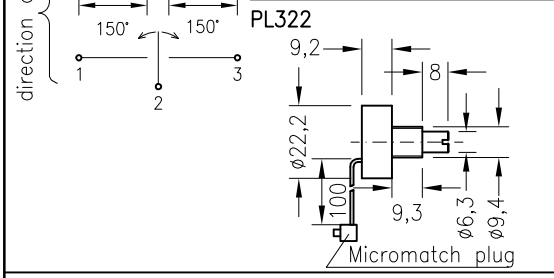

PL332

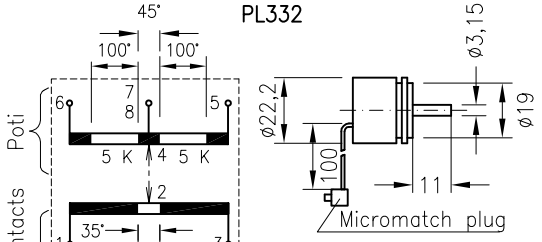

PL322

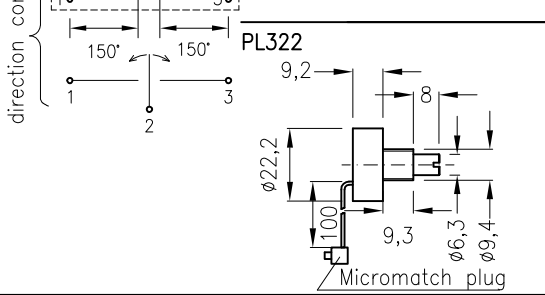

PL322

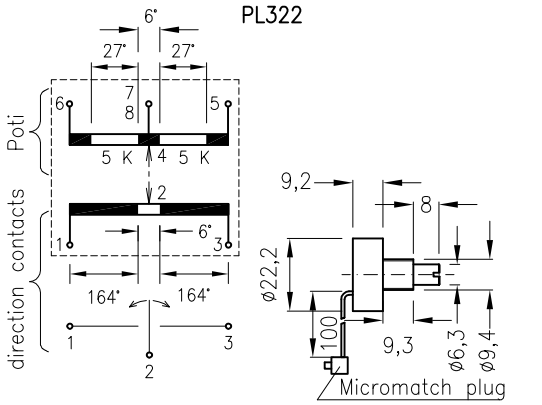

Spohn+Burkhardt
Elektrotechnische Fabrik Blaubeuren

Mauergasse 5
89143 BLAUBEUREN
GERMANY

Tel. +49 7344 171-0 info@spobu.de
Fax +49 7344 171-99 www.spobu.de

This amplifier converts the output of a potentiometer into a current signal of 4...20 mA.
Base value (4 mA, offset) and endvalue (20 mA, span) are adjustable by trimming potentiometers.

Diagram:

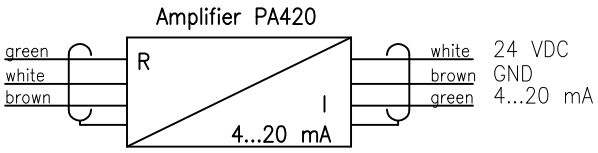

Dimensions:

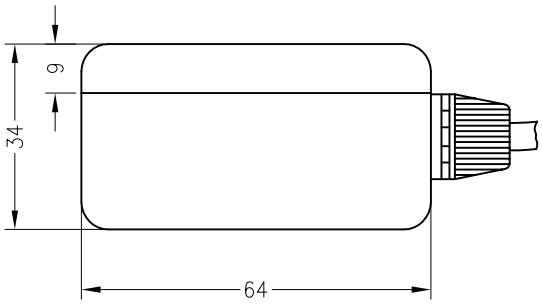

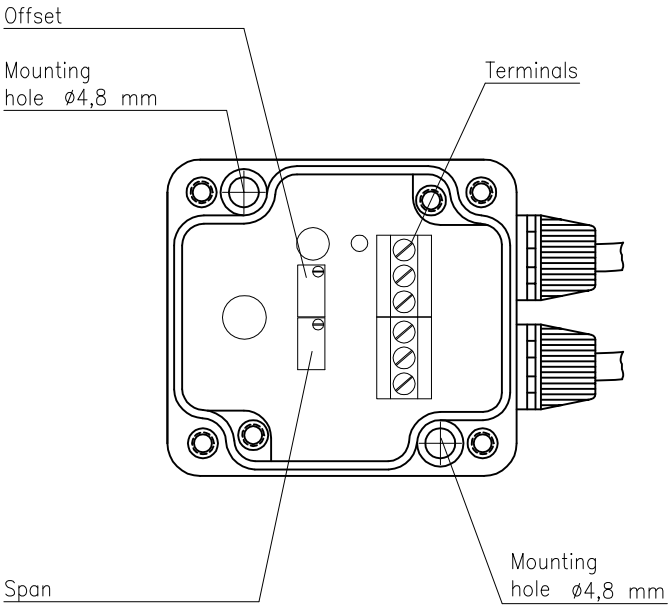

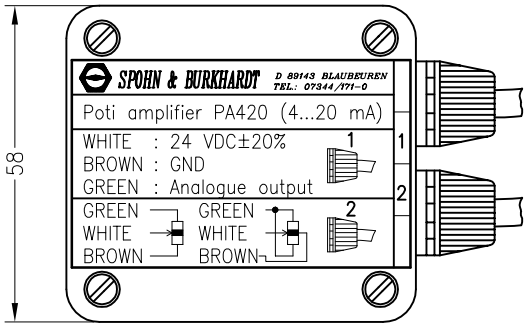

Output signals:

E.g. with poti PD550-S233

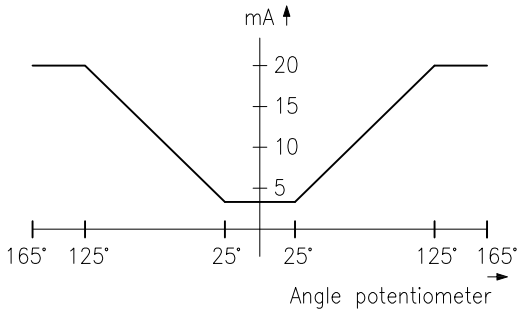

Connecting diagram:

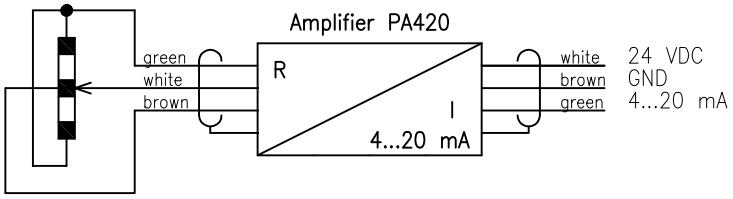

possible potentiometer:
PD550 5-0-5 kOhm (PQ55, wired wounded potentiometer)
PL310 5-0-5 kOhm (B55, conductive plastic potentiometer)
other potentiometer on request

Electrical data:

Supply voltage:	24 VDC ±20 %
Supply current:	max. 80 mA
Load:	max. 500 Ohm
Output signal:	4-20 mA
Operating temperature:	0-60 °C
Potentiometer:	5-10 kOhm

Mechanical data:

Housing:	plastic
Connection:	shielded cable 3x0,25 mm²
	length 1 m
Protection:	IP42
Dimensions:	64x58x34 mm
Emi certificated	

Price: SPOBU-Id.-Nr. EUR
Amplifier PA420 price

EMI:
EN 55022 until 1 GHz
EN 61000-4-3
EN 61000-4-6
EN 61000-4-2

Suitable potentiometer see sheet 14/...

Spohn+Burkhardt
Elektrotechnische Fabrik Blaubeuren
Mauergasse 5
89143 BLAUBEUREN
GERMANY
Tel. +49 7344 171-0 info@spobu.de
Fax +49 7344 171-99 www.spobu.de

Potentiometer amplifier PA41220

List 7 / 2014
14/5A

In control units resistor changings of potentiometer are generated and afterwards amplified.
This amplifier converts the output of a potentiometer (5...10 kOhm) into a current signal of 4...12...20 mA.
Zero point and final value are adjustable separately.

Diagram:

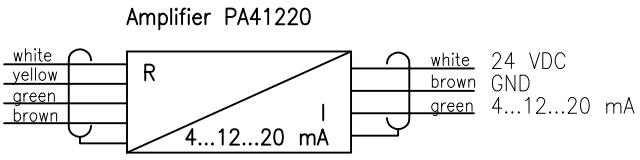

Dimensions:

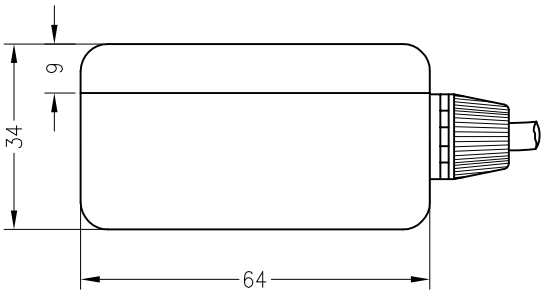

Structure:

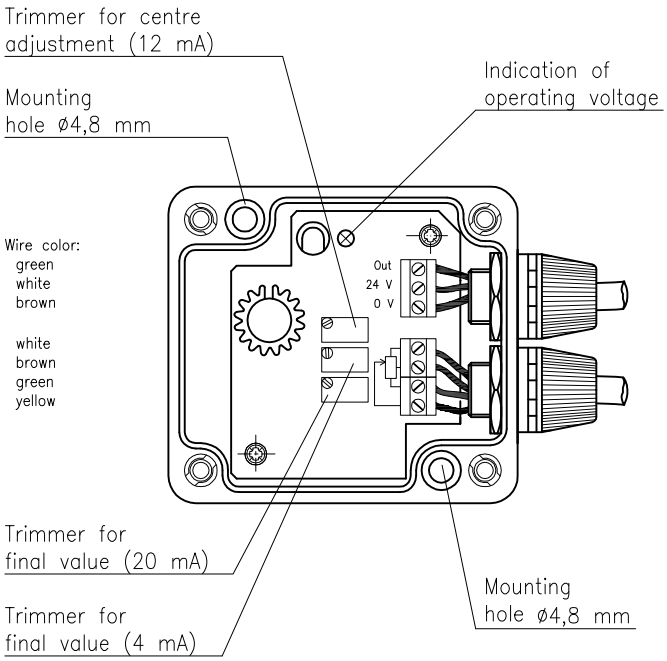

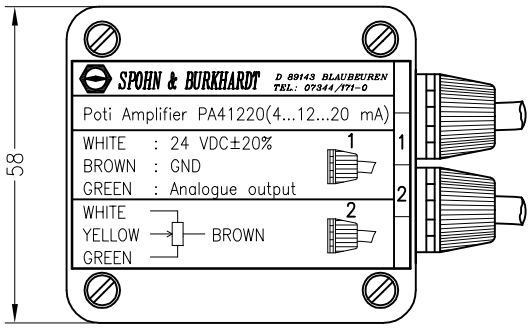

Output signals:

E.g. with poti PQ55

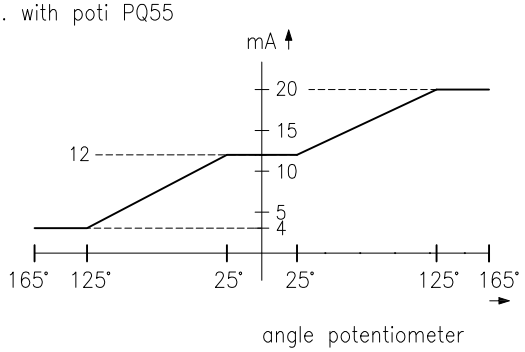

Connecting diagram:

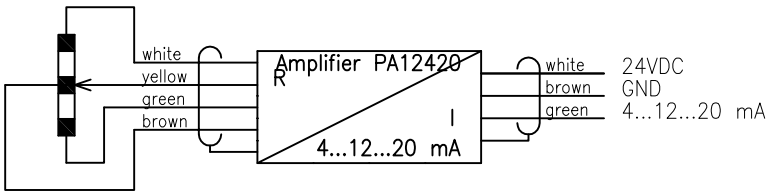

possible potentiometer:
B55 (conductive plastic potentiometer)
G55 (conductive plastic potentiometer)
Other potentiometer on request

Electrical data:

Supply voltage:	24 VDC ±20%
Supply current:	max. 80 mA
Load:	max. 500 Ohm
Output signal:	4...12...20 mA
Operating temperature:	0–60 °C
Potentiometer:	5–10 kOhm

Mechanical data:

Housing:	plastic
Connection:	shielded cable 3x0,25 mm²
	length 1 m
Protection:	IP42
Dimensions:	64x58x34 mm

Emi certificated

Price:

	SPOBU–Id.–Nr. EUR
Amplifier PA41220	24890

Additional price:
potentiometer see 14/...

EMI:

EN 55022 until 1 GHz
EN 61000–4–3
EN 61000–4–6
EN 61000–4–2

Spohn+Burkhardt
Elektrotechnische Fabrik Blaubeuren

Mauergasse 5
89143 BLAUBEUREN
GERMANY

Tel. +49 7344 171-0 info@spobu.de
Fax +49 7344 171-99 www.spobu.de

This amplifier converts the output of a potentiometer into a current signal of 0...20 mA.
Base value (0 mA, offset) and endvalue (20 mA, span) are adjustable by trimming potentiometers.

Diagram:

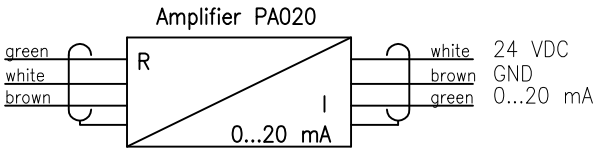

Dimensions:

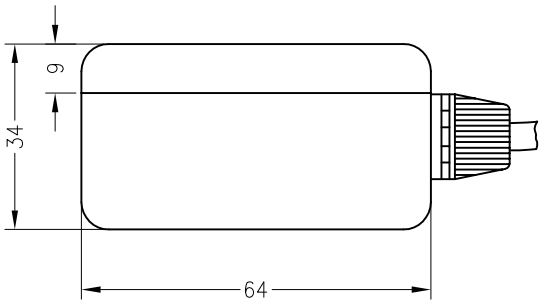

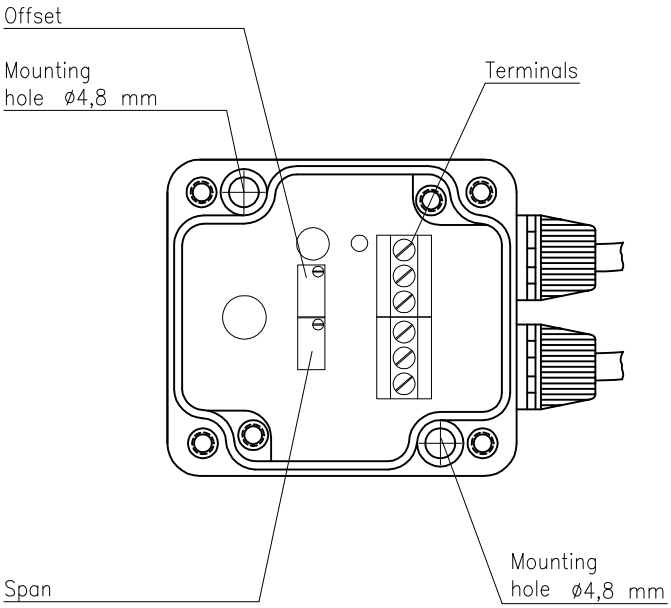

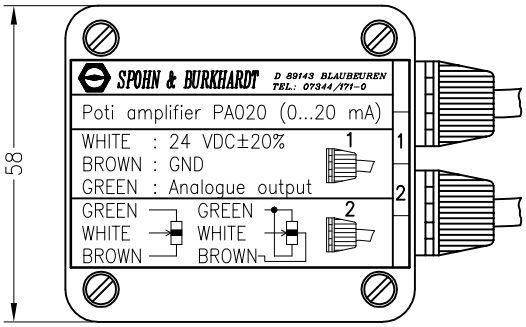

Output signals:

E.g. with poti PD550-S233

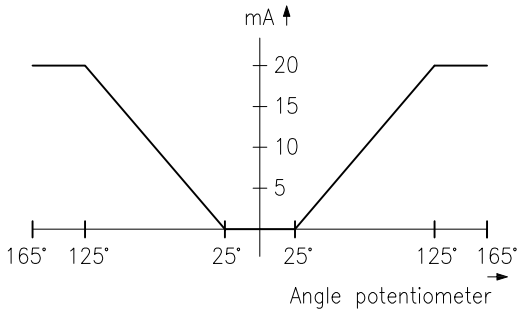

Connecting diagram:

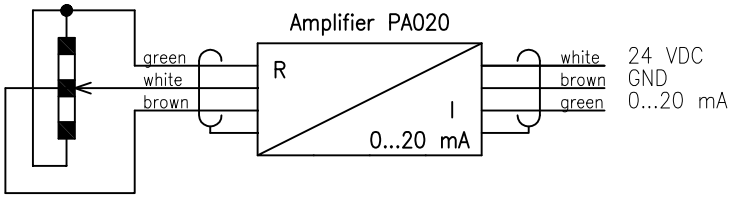

Electrical data:

Supply voltage:	24 VDC ±20 %
Supply current:	max. 80 mA
Load:	max. 500 Ohm
Output signal:	0-20 mA
Operating temperature:	0-60 °C
Suitable for Potentiometer:	5-10 kOhm

Mechanical data:

Housing:	plastic
Connection:	shielded cable 3x0,25 mm²
	length 1 m
Protection:	IP42
Dimensions:	64x58x34 mm

Price:

	SPOBU-Id.-Nr. EUR
Amplifier PA020 price	25119

EMI:

EN 55022 until 1 GHz
EN 61000-4-3
EN 61000-4-6
EN 61000-4-2

Suitable potentiometer see sheet 14/...

Spohn+Burkhardt
Elektrotechnische Fabrik Blaubeuren

Mauergasse 5
89143 BLAUBEUREN
GERMANY

Tel. +49 7344 171-0 info@spobu.de
Fax +49 7344 171-99 www.spobu.de

The control circuit, resistor changes are generated by sensors (e.g. potentiometers)
Amplifiers are used for the transmission. The amplifier PAP20I as PAP10U respectively transform the signal of 5K–0–5K or 10K–0–10K of a potentiometer into a polarized current or voltage value.
The adjustment of the zero point and the final value may be done by trimmer installed in the amplifier.

Diagram:

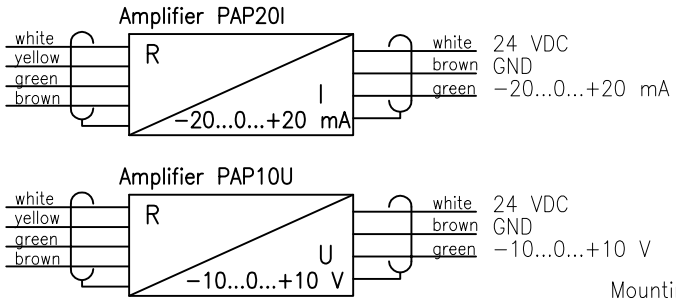

Dimensions:

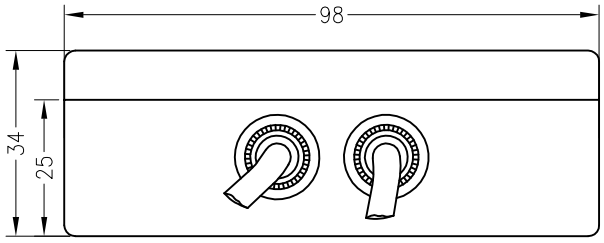

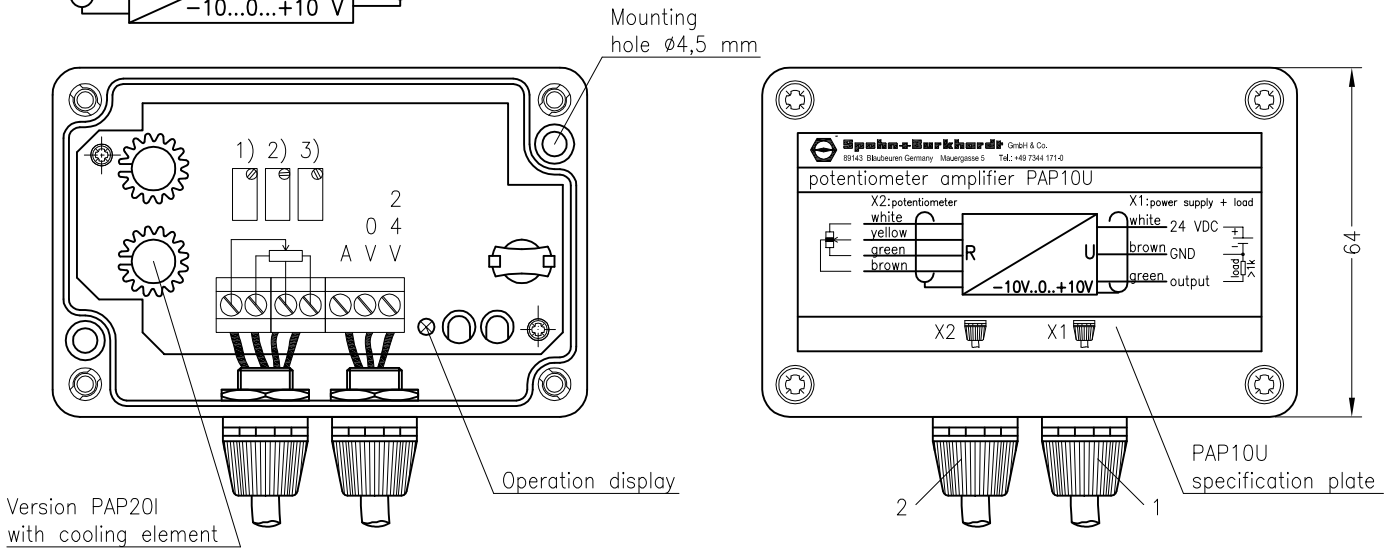

1) Trimmer for final value
2) Trimmer for final value
3) Trimmer for zero setting

Output signals:

E.g. with poti PD550–S233

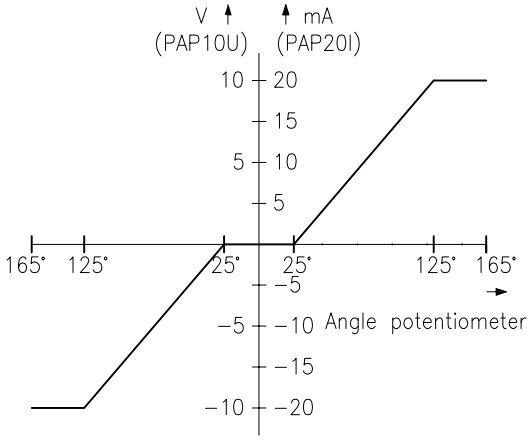

Connecting diagram:

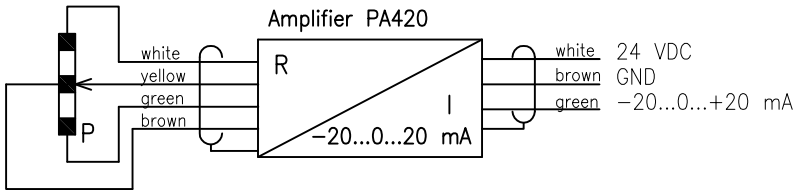

P: e.g..: PD550 5–0–5 kOhm –S233 (PQ55, wired wounded potentiometer)
PL310 5–0–5 kOhm –S256 (B55, conductive plastic potentiometer)
Other potentiometer on request

Price: EUR

Amplifier PAP20I	piece
Amplifier PAP10U	piece

Electrical data:

Supply voltage:	24 VDC ±15%
Operating temperature:	−25 °C...+50°C

Mechanical data:

Housing:	plastic
Connection:	shielded cable 3x0,25 mm² 4x0,25 mm², length 1 m
Protection:	IP42
Dimensions:	98x64x34 mm

EMI:

EN 55022 up to 1 Ghz
EN 61000–4–3
EN 61000–4–6
EN 61000–4–2

suitable potentiometer
see sheet 14/...

Spohn+Burkhardt
Elektrotechnische Fabrik Blaubeuren
Mauergasse 5
89143 BLAUBEUREN
GERMANY
Tel. +49 7344 171-0 info@spobu.de
Fax +49 7344 171-99 www.spobu.de

Programmable optoelectronical absolute encoder OER, OERH for master controller type VNS0, NNS0 and VNS2

List 7 / 2014
15/11A

This encoder uses a contactless optoelectronic system to identify each position. In addition to the binary and gray-code output the encoder has got 2 direction signals and a LED to indicate zero position. The encoder is mounted with coupling to the VNS0 and NNS0 master controller.

Features:

Push button for setting zero
LED for zero-position
Trimming potentiometer for current outputs
Programmable with PC-program:
Programmable functions: curve characteristic, angle, dead time, gray/binary 0-20/4-20 mA and dead time for direction signals

Application:

* Digital reference for PLC's
* Analoge output for PLC's

OER... standardcable LiYCY
OERH... non halogen cable

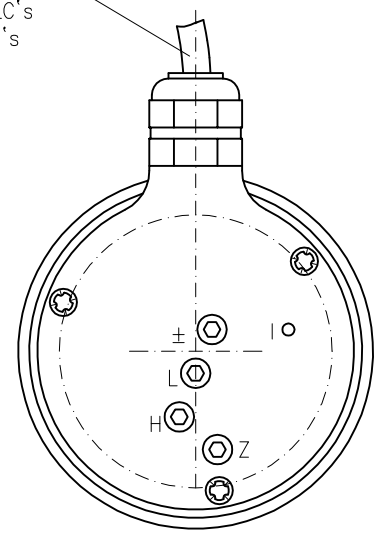

Designation key:	Version with cable LiYCY	Version with non halogen cable	charak-teristic curve	type of controller
8 bit binary code	OER8B	OERH8B	- ☐	☐
8 bit gray code	OER8G	OERH8G	- ☐	☐
current output 0-20mA	OER020	OERH020	- ☐	☐
current output 4-20mA	OER420	OERH420	- ☐	☐
special characteristic curve	OERS...	OERHS...		

Characteristic curve (See details below)	Type of controller	Characteristic curve 1 α	β	γ
1 = linear	VNS0 = ☐	±20°	±123°	±15°
2 = progressiv 1	NNS0 = N	±20°	± 85°	±15°
3 = progressiv 2	VNS2 = NS2	±20°	±100°	±15°
4 = progressiv 3				

Output signals:

8-bit-binary code + 2 direction signals:

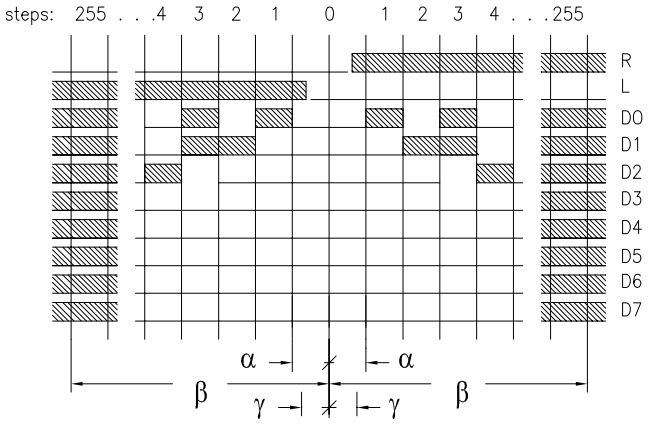

8-bit-gray code + 2 direction signals:

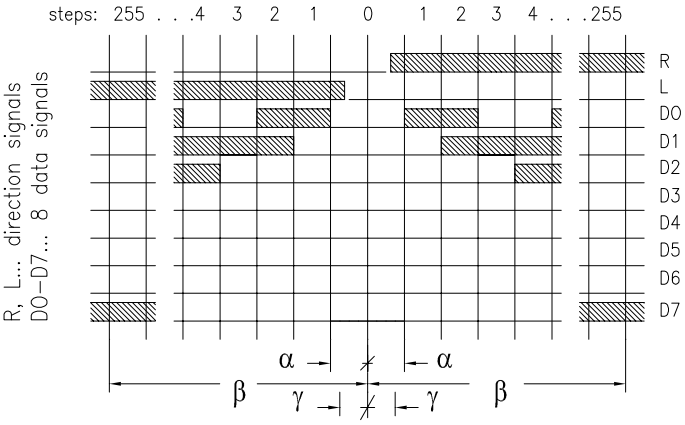

Current output 0-20 mA + 2 direction signals:

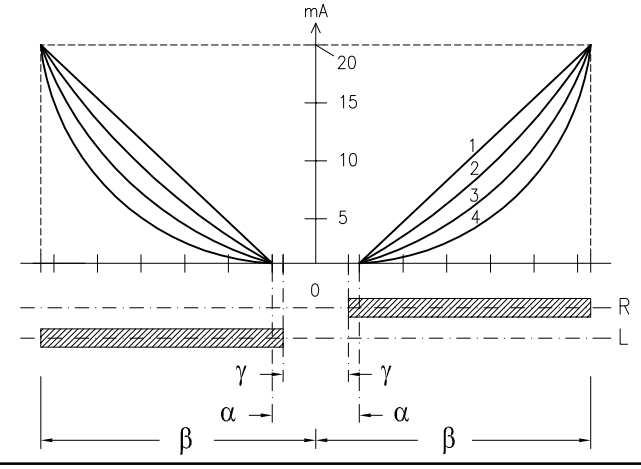

Current output 4-20 mA + 2 direction signals:

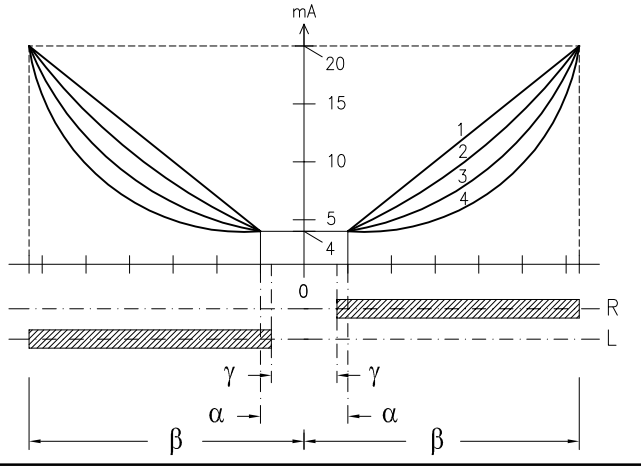

Spohn+Burkhardt
Elektrotechnische Fabrik Blaubeuren

Mauergasse 5
89143 BLAUBEUREN
GERMANY

Tel. +49 7344 171-0 info@spobu.de
Fax +49 7344 171-99 www.spobu.de

Programmable optoelectronical absolute encoder OER, OERH for master controller type VNS0, NNS0 and VNS2

List 7 / 2014
15/12A

Dimensions:

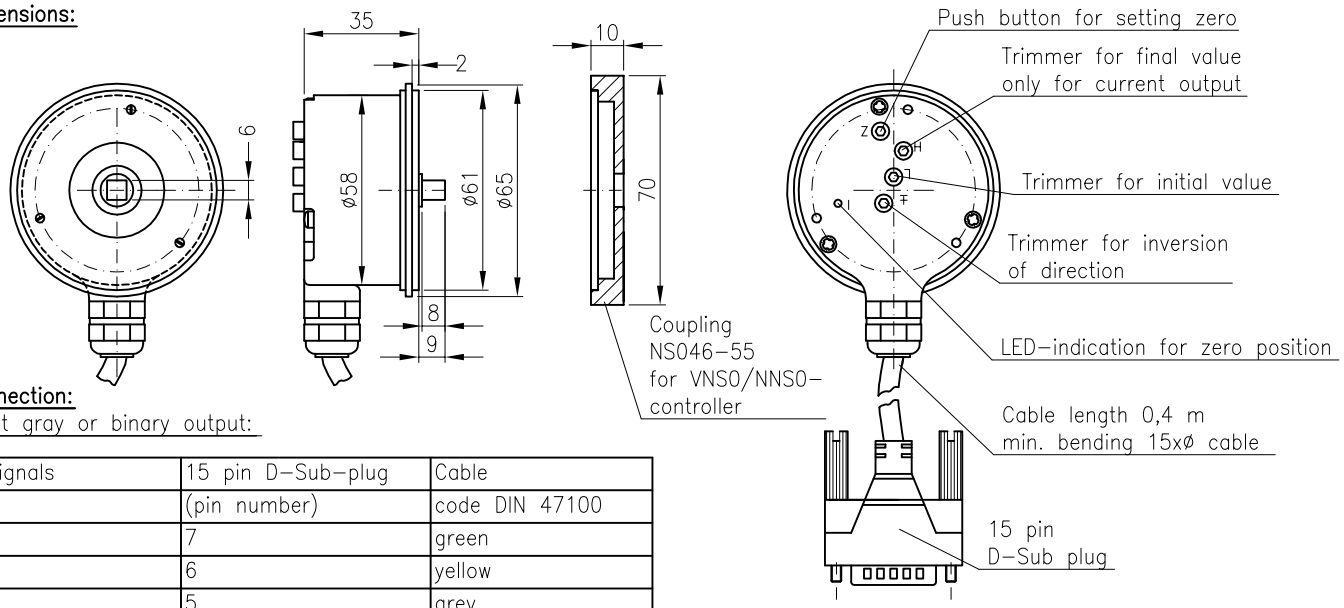

Connection:

8 bit gray or binary output:

Signals	15 pin D-Sub-plug	Cable
	(pin number)	code DIN 47100
D0	7	green
D1	6	yellow
D2	5	grey
D3	4	pink
D4	3	blue
D5	2	red
D6	15	red/blue
D7	14	grey/pink
right	13	black
left	12	violet
supply voltage U+	9	white
GND 0V	8	brown
shielding	housing	shielding

Connection diagram 0-20/4-20 mA:

Signals	15 pin D-Sub-plug	Cable
	(pin-number)	code DIN 47100
output signal	1	green
right	13	yellow
left	12	grey
supply voltage U+	9	white
GND 0V	8	brown
shielding	housing	shielding

Electrical data:

Supply voltage	9...36 VDC(Uv)
Supply current	Type (max) 45 (70) mA at 24 VDC
Temperature	±0,5% at 20 mA (±100 µA)
Output signals	2 direction signals + current output or 8-bit-code
Angle	±123° max. mechanical measuring

Outputs:

Parallel- and direction signals	$U_{High} \geq Uv-3,0$ V, $U_{Low} \leq 0,5$ V (at 20 mA) short circuit protected
Data code	Gray / Binär
Direction signals	signal R=1:a (0:a), L=0:a (1:a) CW (CCW) from 0-position, view onto shaft
Current outputs	0...20 / 4...20 mA
Maximal load	(+Uv-7 V) / 20 mA=R max.
Minimal load	(150) 300 Ω bei (9...30) 30...36 VDC 30...36 VDC voltage supply, continuous operation
Adjustment range current output signals	
4 mA	3,8...4,2 mA
20 mA	17...22 mA
Scanning frequency	1 kHz
Precision	±1/2 LSB
Cable	0,4 m shielded (16x0,14 mm)
Plug (pins)	15 pin D-sub plug at end of cable

Mechanical data:

Inertia factor	$1,7x10^{-6}$ kgm²
Journal load	Radial 20N, axial 10N
Shaft	6 mm, quadratic
Code disc	unbreakable acryl-glass
Housing	Aluminium
Weight	350 g
Protection	IP65
Temperature	-40 °C...+70 °C
Storage temperature	-45 °C...+70 °C
Vibration	≤300 m²/s (50...2000 Hz)
Shock	≤2000 m²/s (11 ms)

EMI:

EN61000-4-2	ESD
EN61000-4-3	Radiated RF field
EN61000-4-4	Electrical fast transient/Burst
EN61000-4-5	Surge
EN61000-4-6	Contucted RF voltage
EN55011	Radiated emission

Prices:

EUR

1 piece	Encoder **OER...**
1 piece	Encoder **OERH...**

Additionals:

1 piece	Coupling NS046-55 for VNS0/NNS0 controller.
1 piece	Extension cable LiYCY 12 pole 2 m gray/binary code
1 piece	Extension cable LiYCY 5 pole 2 m current output

Spohn+Burkhardt
Elektrotechnische Fabrik Blaubeuren
Mauergasse 5
89143 BLAUBEUREN
GERMANY
Tel. +49 7344 171-0 info@spobu.de
Fax +49 7344 171-99 www.spobu.de

This absolut-encoder shows a contactless system to be mounted directly, servo-flanged to controller type VNS0 and NNS0.
Limit adjustment by trimming potentiometers. Polarity change by rotary switch.

Designation key:

OGRPP20I – ☐ ☐ current output −20..0..+20 mA ☐ = curve characteristic
for NNS0-controller add:N

1 = linear
2 = progressiv 1
3 = progressiv 2
4 = progressiv 3
S0 = special application

Output signals:

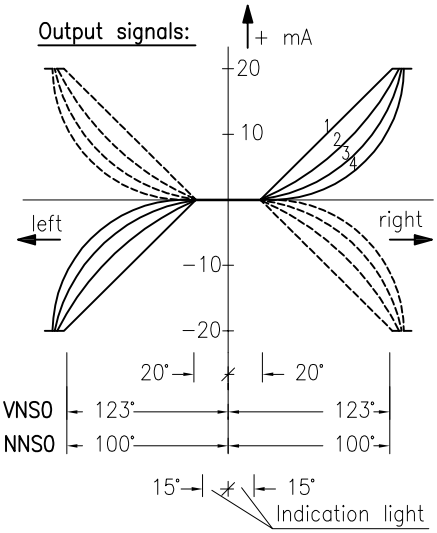

To inverse output polarity tum over rotary switch

Diagram:

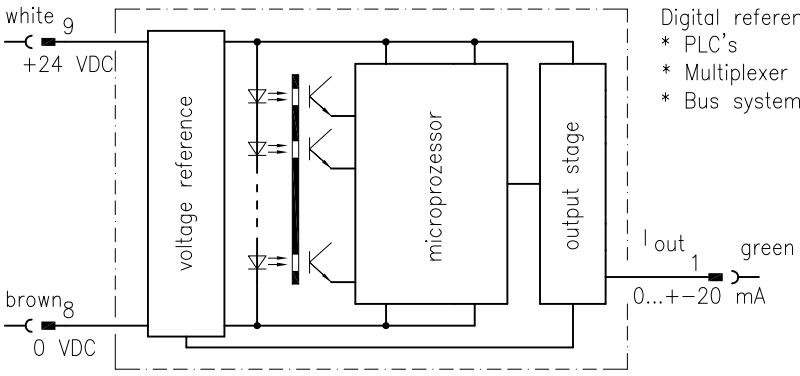

Application:

Digital reference for
* PLC's
* Multiplexer systems
* Bus systems

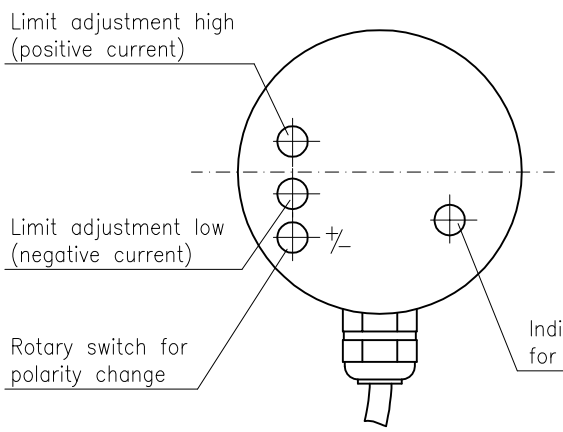

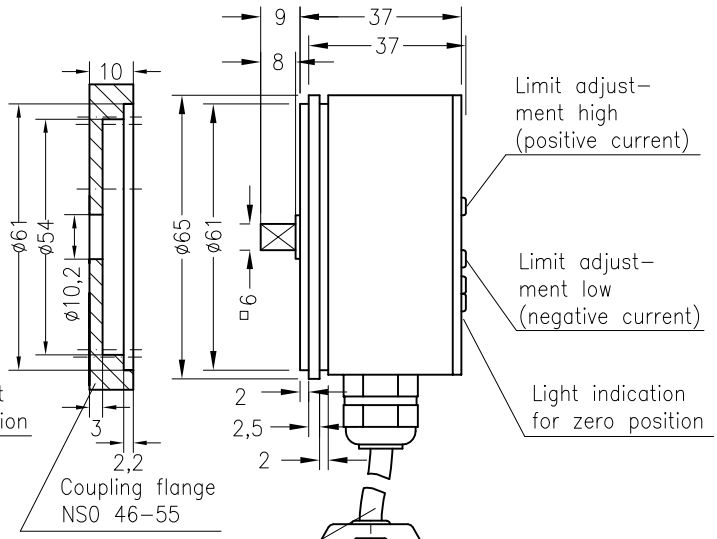

±20mA output:

Signals	15pin D-Sub-plug (pin number)	Cable
output signal	1	green
supply voltage	9	white
GND 0 V	8	brown
shielding	housing	shielding

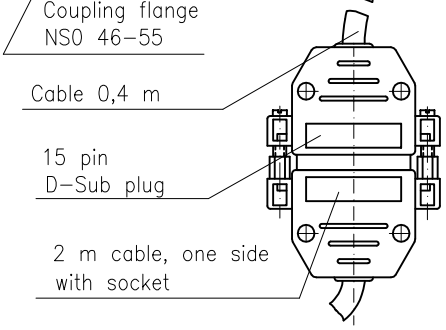

Electrical features:

Supply voltage:	18...36 VDC
Supply current:	max. 70 mA
Load:	max. 500 Ohm
	min. 0 Ohm
Temp. stability:	max. 1%
Output current:	−20...0...+20 mA
Aktiv angle:	123°-0-123°
Operating temperature:	−20 °C...+60 °C
Storage temperature:	−25 °C...+70 °C

Other angle settings on request

Mechanical features:

Enclosure:	aluminium anodized
Connection:	shielded cable
Angle:	360°
Protection:	IP65
Code disc:	unbreakable acrylic glass
Weight:	350 g
Vibration:	≤ 100 m²/s (50...2000 Hz)
Schock:	≤ 1000 m²/s (11 ms)

EMI:
EN 50081-1
pr EN50082-2

Price: EUR
1 piece

Additional price:
1 piece coupling NS046-55
for controller VNS0

Spohn+Burkhardt
Elektrotechnische Fabrik Blaubeuren
Mauergasse 5
89143 BLAUBEUREN
GERMANY
Tel. +49 7344 171-0 info@spobu.de
Fax +49 7344 171-99 www.spobu.de

Optoelectronical absolute encoder OGF, OGFR for controller type VCS0

List 7 / 2014
15/14

This encoder uses a contactless optoelectronic system. The encoder is mounted directly (without any special coupling) to joystick controller type VCS0. Zero position is indicated by LED.
Furthermore: output (gray or binary code) is adjustable by change-over switch.

Encoder	Function	Angle of rotation
OGF 6B OGFR 6B	6-bit-binary-code 2 direction signals	2x35° 2x26°
OGF 6G OGFR 6G	6-bit-gray-code 2 direction signals	2x35° 2x26°

Application:

Digital reference for
* PLC
* Controlled drive
* Hoist drive
* Digital-analogue transducer

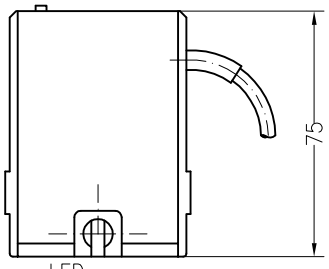

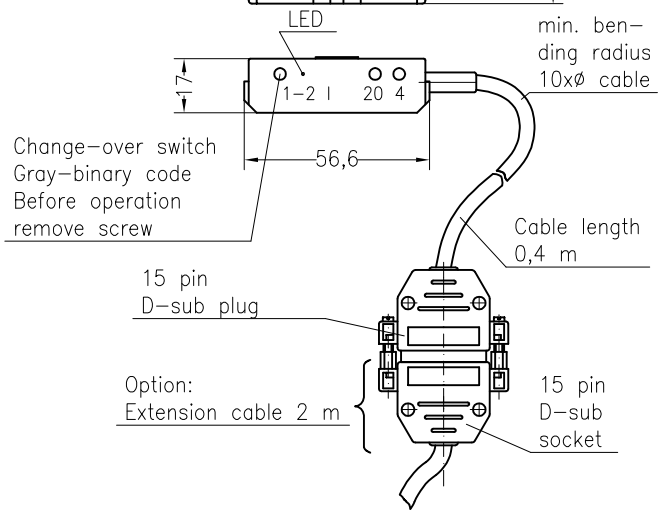

Connection diagram:

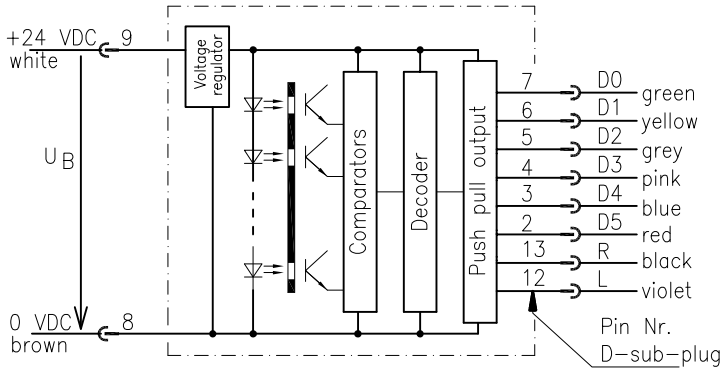

Output signals:
Binary code:

R, L... direction signals
D0-D7... 8 data signals

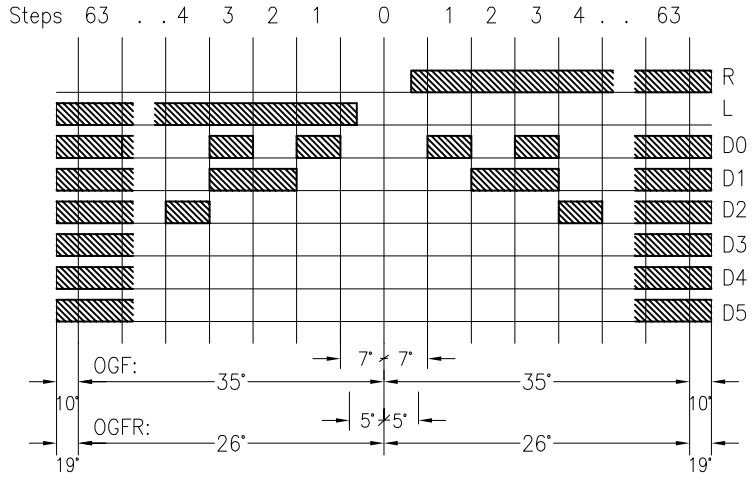

Gray-code:

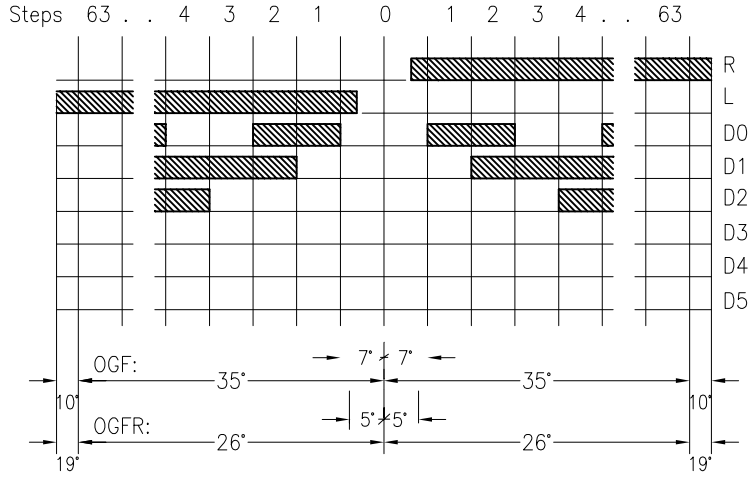

Electrical data:

Supply voltage:	U_B=9...36 VDC polarity protected
Current consumption:	max. 60 mA at 24 VDC
Outputs:	8 x push pull amplifier, short circuit protected
	$U_{High} = U_B$ -3,0 V (at 20 mA)
	U_{Low} = < 0,5 V (at 20 mA)
Output current per channel:	max. 15 mA
Active angle:	35°-0-35° or rather 26°-0-26°
Temperature range:	-20 °C till +60 °C
Temperature stability:	0,5% of 20 mA (±100 µA)

Mechanical data:

Enclosure:	metallized ABS
Connection:	shielded cable LiYCY 10x0,14 mm² length 2 m with 15 pin D-Sub-plug
Scanning:	6 bit gray code disc 2 direction signals
Total angle:	45°-0-45°
Inertia factor:	0,3x10⁻⁶ kgm²
Protection:	IP42
Resolving:	63-0-63 steps
Dead band zone:	5°-0-5°
Dimensions:	75x56,6x17 mm
Weight:	app. 150 g

EMC:

EN 50081-1
EN 50082-2

Price: EUR

1 piece encoder **OGF...**
1 piece encoder **OGFR...**
1x extension cable LiYCY 10x0,14 2 m

Spohn+Burkhardt
Elektrotechnische Fabrik Blaubeuren
Mauergasse 5
89143 BLAUBEUREN
GERMANY
Tel. +49 7344 171-0 info@spobu.de
Fax +49 7344 171-99 www.spobu.de

Optoelectronic absolute encoder OGF, OGFR for controller type VCS0

List 7 / 2014
15/15

This encoder uses a contactless optoelectronic system. The encoder is mounted directly (without any special coupling) to controller type VCS0.
Zero and limit adjustment by trimming potentiometer. Zero position is indicated by LED.
Furthermore: output 0...20 mA or 4...20 mA is adjustable by change-over-switch.

Version	Output signal	Rotation angle
OGF 020 OGFR 020	20...0...20 mA	35°-0-35° 26°-0-26°
OGF 420 OGFR 420	20...4...20 mA	35°-0-35° 26°-0-26°

Applications:
Analogue output for:
* PLC's
* Control systems
* Converters

Dimensions:

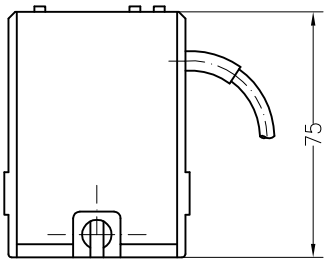

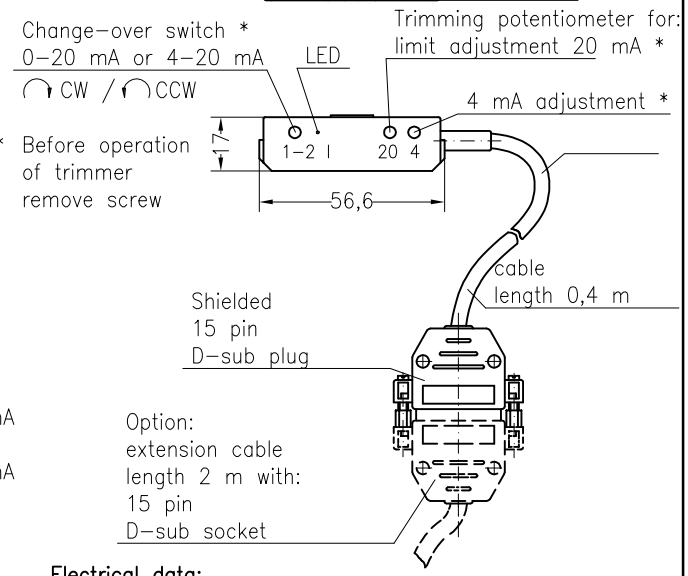

Connection diagram:

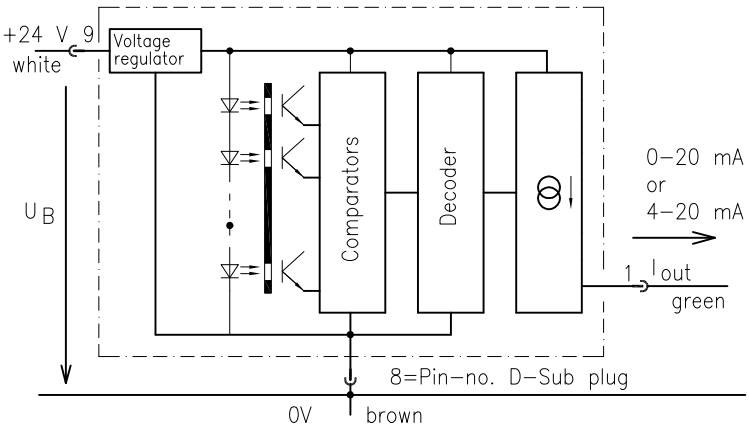

Output signals:

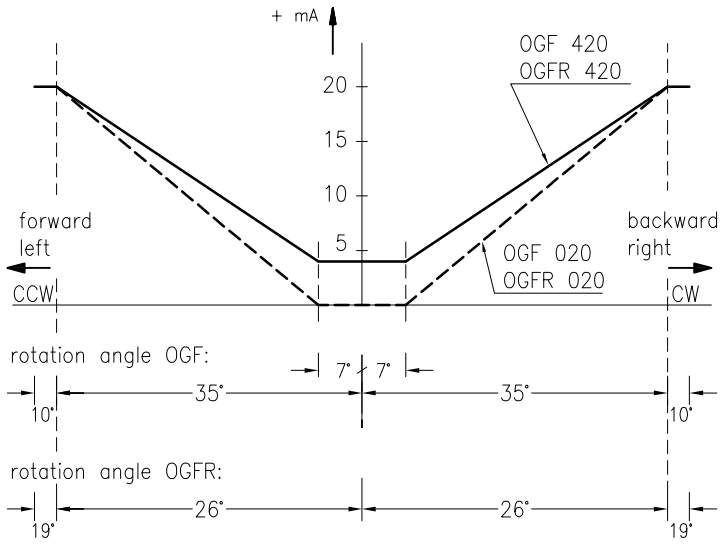

Electrical data:

Supply voltage:	U_B = 18...36 VDC polarity protected
Current consumption:	max. 70 mA at 24 VDC
Max. load:	$(+U_B - 3\ V) / 20\ mA = R_{max.}$
Minload:	0 Ohm
Output current:	max. 20 mA,short circuit protected
Active angle:	35°-0-35° or 26°-0-26°
Temp. range:	-20 °C to +60 °C
Temp.-stability:	0,5% by 20 mA (±100 µA)
Adjustment:	
initial value/final value	4 mA : 3,8-4,2 mA 20 mA : 19-21 mA

Mechanical data:

Enclosure:	metallized ABS
Connection:	shielded cable LiYCY LiYCY 5x0,14 mm^2 mit 15-poligem D-Sub-Stecker
Code disc:	Mylar
Scanning:	6 Bit gray-code disc
Max. rotation angle:	45°-0-45°
Inertia factor:	$0{,}3 \times 10^{-6}$ kgm^2
Protection:	IP42
Resolution:	63-0-63 steps
Weight:	150 g

EMC:
EN 61000-6-2:2001
EN 61000-6-4:2001

Price: EUR

Absolute encoder	OGF...
Absolute encoder	OGFR...
Extension cable LiYCY 5-pole according to SS 13463 B	2 m

Spohn+Burkhardt
Elektrotechnische Fabrik Blaubeuren
Mauergasse 5
89143 BLAUBEUREN
GERMANY
Tel. +49 7344 171-0 info@spobu.de
Fax +49 7344 171-99 www.spobu.de

Optoelectronic absolut encoder OGF for controller type VCS0

List 7 / 2014
15/16

This absolut encoder shows a contactless system to be mounted directly to controller type VCS0.
The limit adjustment by trimming potentiometers.

Typ: OGF P20 I
Encoder, current operated ± 0...20 mA (polarisation)

Application:
Analogue output for
* PLC's
* control systems
* converters

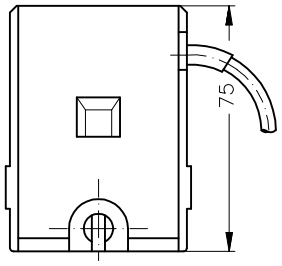

Diagram:

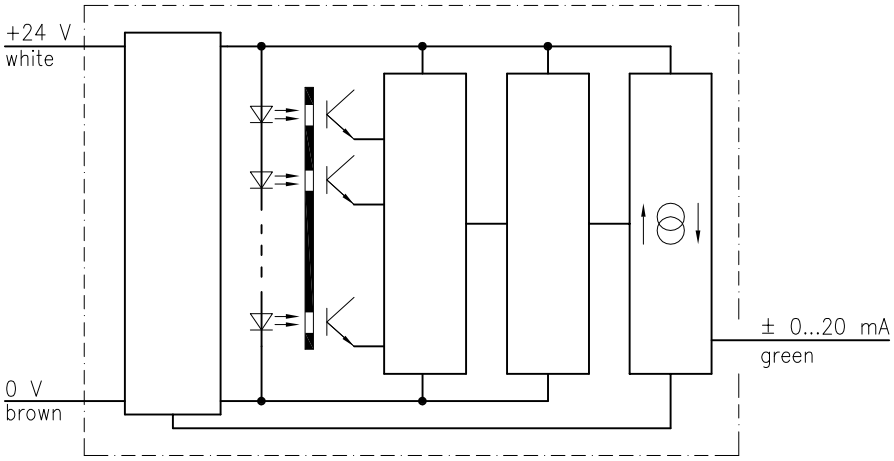

Trimming potentiometer for*:

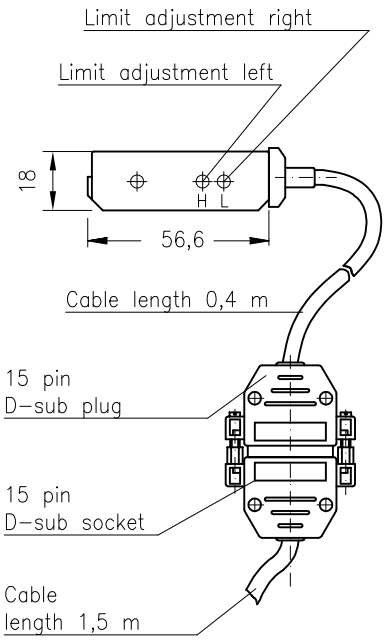

* Remove screws to adjust.

Output signals:

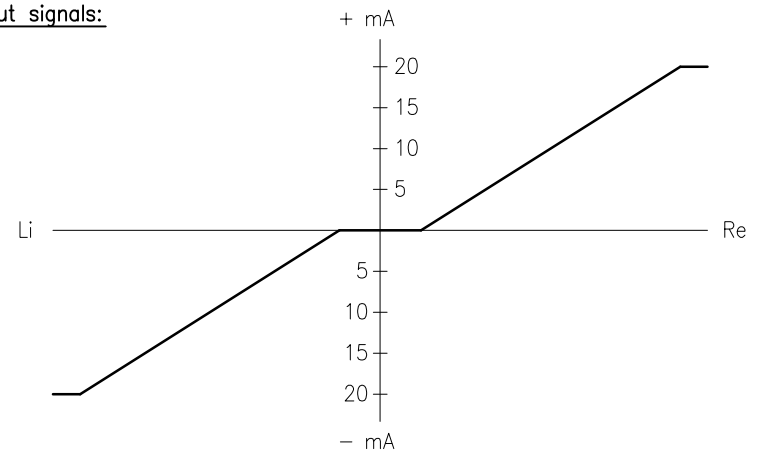

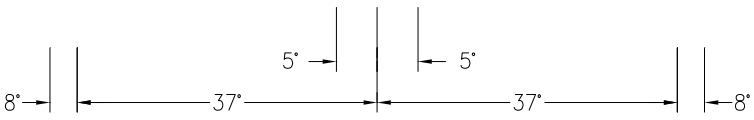

Electrical features:

Supply voltage:	18...36 VDC
Ripple voltage:	< 10%
Supply current:	max. 60 mA
Load:	max. 500 Ohm
Temperature stability:	max. 0,3%
Current each output:	max. ±22 mA short circuit proof
Active angle:	37°–0–37°
Temperature range:	–20 °C...+60 °C
Life time:	typ. 100.000 h

Mechanical features:

Enclosure:	Metallized ABS
Connection:	shielded cable LiYCY 3x0,25 mm ^{2} length 2 m, D-sub-connector
Scanning:	6 bit code + 2 direction signals
Angle:	45°–0–45°
Protection:	IP42
Resolving:	63–0–63 steps
Dead band centre:	5°–0–5°
Dimensions:	75x56,6x17 mm

EMV:

EN 50081–1

pr EN 50082–2

Price: EUR
1 piece

Spohn+Burkhardt
Elektrotechnische Fabrik Blaubeuren

Mauergasse 5
89143 BLAUBEUREN
GERMANY

Tel. +49 7344 171-0 info@spobu.de
Fax +49 7344 171-99 www.spobu.de

The encoder OGP–DP will be connected directly on profibus; specification class 2 is fullfilled and encoder is programmable via profibus–DP.
The PN0–ident–number AAAB (Hex) is provided at PN0. Under file TR05AAAB.GSD is the log file available
Note for operation: Profibus–master must be able to send a parametric telegram.
Furthermore the configuration software of master must be able to display the encoder parameter structure.

Dimensions:

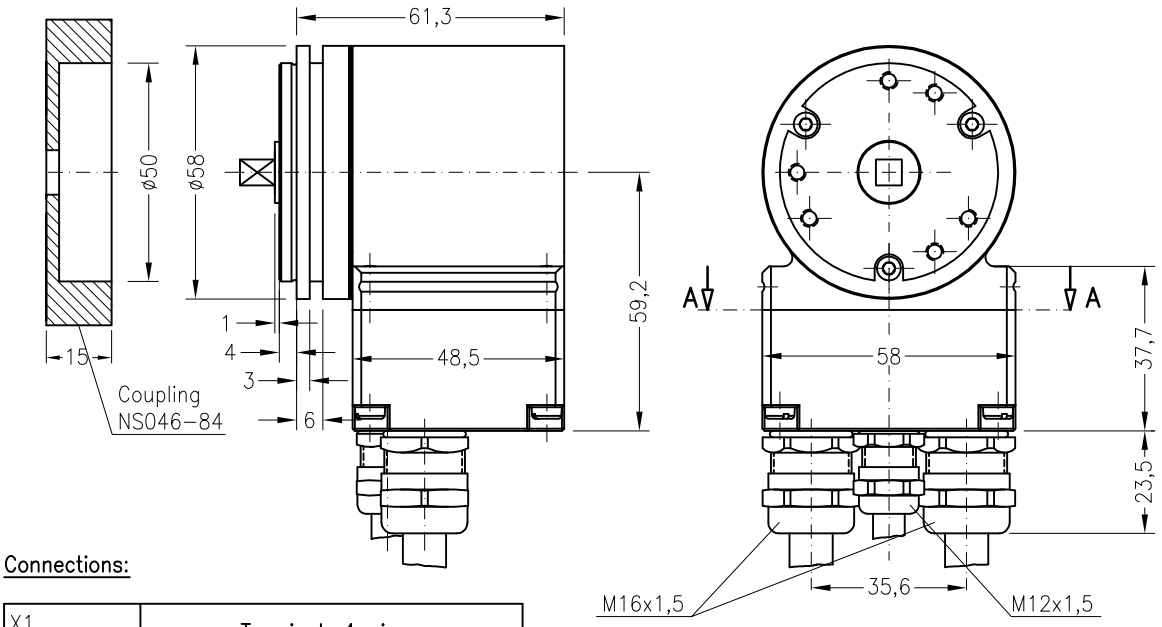

Connections:

X1	Terminal, 4 pins	
Pin 1	Profibus, Data A	Profibus_IN
Pin 2	Profibus, Data B	
Pin 3	US–power supply	
Pin 4	0V–power supply	
X2	**Terminal, 4 pins**	
Pin 1	Profibus, Data A	Profibus_OUT
Pin 2	Profibus, Data B	
Pin 3	US–power supply	
Pin 4	0V–power supply	

A–A

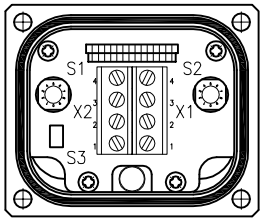

S1/S2: Selector switch for address
S3: Terminal resistance On/Off

Service–display:

Status LEDs	
–BUS RUN=green	● = ON
–BUS FAIL=red	○ = OFF
	⊙ = FLASHING

Technical data:

Step:	8.192
Rotations:	1
Interface:	Profibus DP
Code:	programmable
Supply voltage:	11–27 V
Output level:	RS485
Protection:	IP65
Temperature:	–20 °C...+70 °C
Flange:	ZB50
Axis:	☐ 6x9 mm

GREEN
● : Operational
○ : No subbly voltage, hardware error
⊙ : Parameter– or configuration error
RED
○ : No error, bus in cycle
⊙ : No allocation to a master
● : No recoverable encoder defect

Price: EUR

1 piece **OGP–DP**

Additional:

Coupling NS046–84
for master controller VNS0

Spohn+Burkhardt
Elektrotechnische Fabrik Blaubeuren
Mauergasse 5
89143 BLAUBEUREN
GERMANY
Tel. +49 7344 171-0 info@spobu.de
Fax +49 7344 171-99 www.spobu.de

The encoder OEP–DP will be connected directly on profibus; specification class 2 is fullfilled and encoder is programmable via profibus–DP.
The PN0–ident–number AAAB (Hex) is provided at PN0. Under file TR09AAAD.GSD is the log file available
Note for operation: Profibus–master must be able to send a parametric telegram.
Furthermore the configuration software of master must be able to display the encoder parameter structure.

Dimensions:

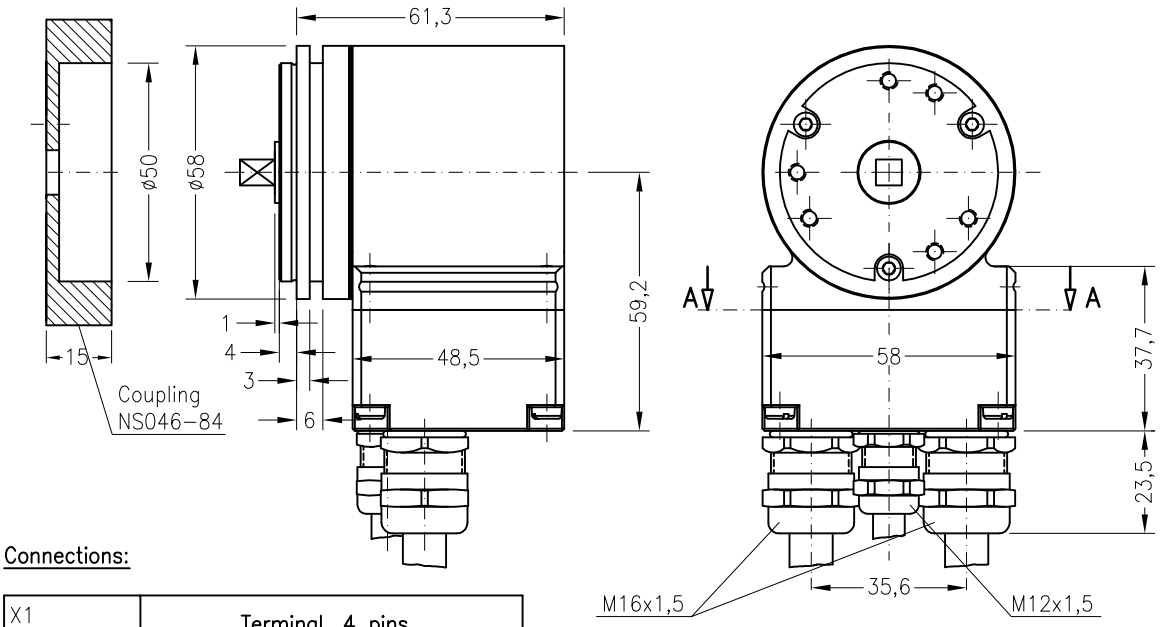

Connections:

X1	Terminal, 4 pins	
Pin 1	Profibus, Data A	Profibus_IN
Pin 2	Profibus, Data B	
Pin 3	US–power supply	
Pin 4	0V–power supply	
X2	**Terminal, 4 pins**	
Pin 1	Profibus, Data A	Profibus_OUT
Pin 2	Profibus, Data B	
Pin 3	US–power supply	
Pin 4	0V–power supply	

A–A

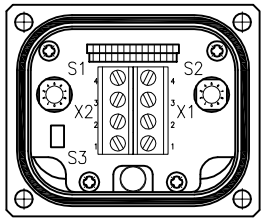

S1/S2: Selector switch for address
S3: Terminal resistance On/Off

Technical data:

Step:	8.192
Rotations:	1
Interface:	Profibus DP
Code:	programmable
Supply voltage:	11–27 V
Output level:	RS485
Protection:	IP65
Temperature:	–20 °C...+70 °C
Flange:	ZB50
Axis:	☐ 6x9 mm

Service–display:

Status LEDs	● = ON
–BUS RUN=green	○ = OFF
–BUS FAIL=red	⊙ = FLASHING

GREEN
● : Operational
○ : No subbly voltage, hardware error
⊙ : Parameter– or configuration error
RED
○ : No error, bus in cycle
⊙ : No allocation to a master
● : No recoverable encoder defect

Price: EUR

1 piece **OEP–DP**

Additional:

Coupling NS046–84
for master controller VNS0

Spohn+Burkhardt
Elektrotechnische Fabrik Blaubeuren
Mauergasse 5
89143 BLAUBEUREN
GERMANY
Tel. +49 7344 171-0 info@spobu.de
Fax +49 7344 171-99 www.spobu.de

Description:



This encoder HS420 uses a contactless hall effect sensor.
It consists of an integrated current amplifier with 20–4–20 mA.
Additional amplifier is not required.

Technical data:

Operational voltage:	U_B	24 VDC ±20%
Periodic deviation:		5%
Current input:	I_V	< 120 mA
Current output:	I_O	4...20 mA
Load:	R_L	<= 500 Ohm
Temperature range:		–40 °C bis +85 °C
EMI:		EN55022 until 1 GHz
Valid for installation		EN61000–4–3
into controller		EN61000–4–6
CS1G, NS3G)		EN61000–4–2

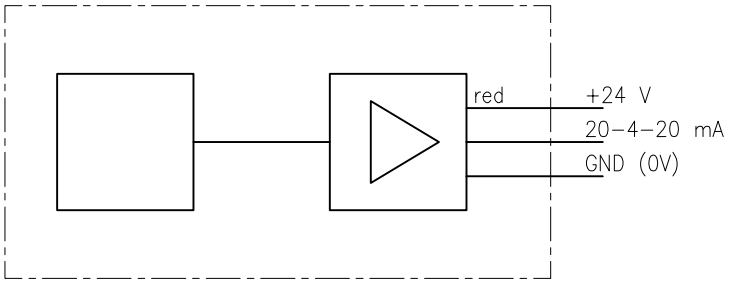

Output curve:

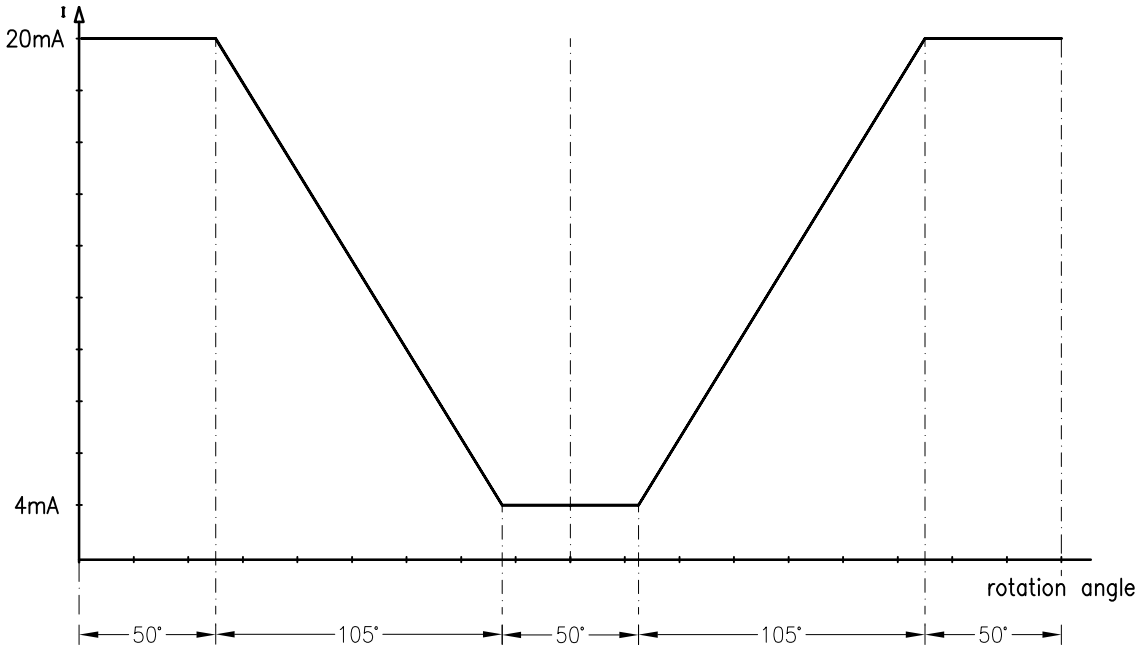

Dimensions:

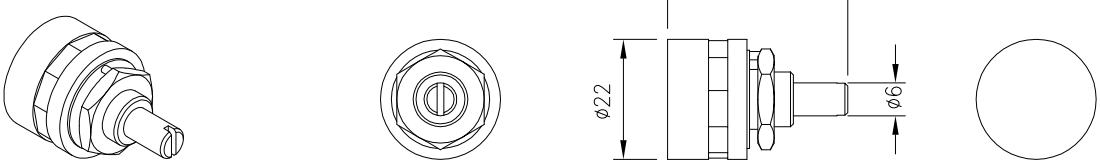

EUR

Spohn+Burkhardt
Elektrotechnische Fabrik Blaubeuren

Mauergasse 5
89143 BLAUBEUREN
GERMANY

Tel. +49 7344 171-0 info@spobu.de
Fax +49 7344 171-99 www.spobu.de

CAN–Bus–interface ESS100 with STW–protokol

List 7 / 2014
16/1

Description:

The controllers CS1, VNS0 and NS3 may be equipped with CAN–Bus interface (STW–protocol).
The electronic card has inputs for 4 potentiometers (4 axis analogue), 4 analogue inputs for potential control at centre tap, as well as digital inputs for direction signals.
Furthermore 8 digital inputs for pushbuttons (e.g. in handle), are available.
This information is transmitted to the CAN–bus via simple protocol.
This electronic may be equipped up to maximum 64 KB Rom, optionally a 62 KB flash as storage is possible.
The flash storage is programmable in device and there fore modifications of software, especially for low series are possible.
Furthermore 2 KB EEprom for parameter and configuration data are available.
The CAN–Bus–electronic processes standard (11–bit) and extended (29–bit) CAN–messages.

Supply voltage + U_B:

Rating voltage:	9,5.. 32 V, non–bounce protection integrated
Maximum operational voltage:	36 V (short circuit protection not granted)
Load–dump protection:	Switch off at + U_B > 40 V
Maximum voltage at$_B$ +U :	60 V
Maximum ripple band:	10%
Current input at U_B = 12 V:	I < 80 mA
Current input at U_B = 24 V:	I < 50 mA

CAN interface:

Physical–layer:	2–wire interface, 5 V level acc. to ISO 11898 Short circuit protection at 24 V operation granted
Maximum bit rate:	1 MBit/sec
Rise time:	Bit rate<125 KBit/sec 12 V/µsec (without bus) Bit rate>125 KBit/sec 24 V/µsec (without bus)
Terminal resistance:	120 Ohm by plug configuration
Connection:	9 pin D–sub plug

Analogue inputs:

Number of inputs:	4 analogue inputs for wiper 4 analogue inputs for centre tap 4x2 digital inputs for direction contacts internal pull–up resistors
Resolution of analogue channels:	10 bit of range 0..5 V_{REF}
Scanning rate per channel:	100 Samples/sec

Digital inputs:

Number of inputs:	8 digital inputs for switches in handle.
Function:	Ground switched iInternal pull–up resistors.

Environmental conditions:

EMC requirements:	Spurious radiation acc. to EN 50081–2
(complete joystick)	Interference rejection acc. to EN 50082–2
Additional:	HF irradiation 20 V/m 80 MHz up to 1 GHz
Operating temperature:	–40 °C... +85 °C (only electronik)
Store temperature:	–55 °C...+105 °C (only electronik)
Dimensions:	See sheet M 7/6

Standard CAN–Bus–PARAMETER:

PDO–type	0 (11–bit–identifier)
PDO ID	0x400 (11bit–identifier)
HOST ID	0x51
Local ID	0x00
baud rate	125 Kbit/sec
start mode	
node guard	0
msg rate	0
msg delay	9
curvature	0

Pin assignment CAN–bus:

D–sub plug 9–pin

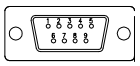

PIN	function
1	NC
2	CAN LOW
3	CAN GND
4	NC
5	Shield
6	GND (UB)
7	CAN HIGH
8	NC
9	+UB

Connection poti via micro–match–socket:

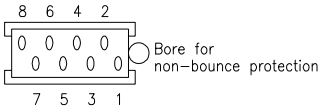

PIN	Assignment
1	Direction forward
2	GND
3	Direction backward
4	Potentiometer wiper
5	Potentiometer +5 V
6	Potentiometer GND
7,8	Potentiometer centre tap (option)

Pin assignment CAN–board SPMSCSE1:

Top side:

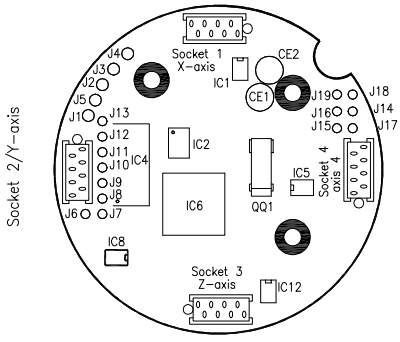

Bottom side:

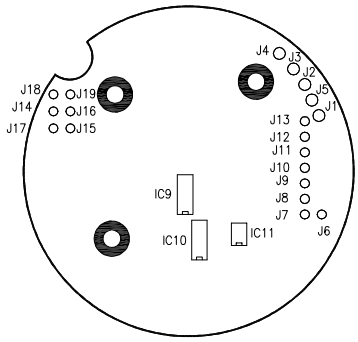

Connections:

J1	+Ub supply
J2	GND supply
J3	CAN+, CAN_H
J4	CAN–, CAN_L
J5	GGND frame chassis ground (optionally)
J6	switch 1
J7	switch 2
J8	switch 3
J9	switch 4
J10	switch 5
J11	switch 6
J12	switch 7
J13	switch 8

Spohn+Burkhardt
Elektrotechnische Fabrik Blaubeuren
Mauergasse 5
89143 BLAUBEUREN
GERMANY
Tel. +49 7344 171-0 info@spobu.de
Fax +49 7344 171-99 www.spobu.de

Description:

The controllers CS1, VNS0 and NS3 may be equipped with CANopen–interface
The electronic card has inputs for 4 potentiometers (4 axis analogue), 4 analogue inputs for potential control at centre tap (e.g. wire failure control), as well as digital inputs for direction signals. Furthermore 8 digital inputs for push buttons (e.g. in handle), 4 digital inputs for CANopen–memory function and 4 outputs for LED are available. This information is transmitted to CAN–bus acc. to draft standard DS301 version 4.0 and DS401 version 2.0 (extension joystick).
Baud rate and CAN–identifier may be adjusted by DIP–switch.
Interface with galvanic isolation between voltage supply and CAN–bus.

Pin assignment CAN–Bus:

D–sub plug 9–pin (optional)

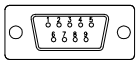

PIN	Function
1	NC
2	CAN LOW
3	CAN GND
4	NC
5	Shield
6	GND (UB)
7	CAN HIGH
8	NC
9	+UB

Connection poti via micro–match–socket:

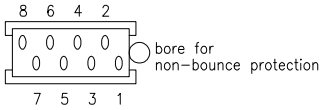

PIN	Assignment
1	Direction forward
2	GND
3	Direction backward
4	Potentiometer wiper
5	Potentiometer +5V
6	Potentiometer GND
7,8	Potentiometer centre tap (option)

Supply voltage + U_B:

Rating voltage:	10.. 36 V, non–bounce protection integrated, filter Low voltage switch off at U < 10 VDC High voltage switch off at U > 36 VDC
Maximum voltage on U_B:	58 VDC (only for short time)
Maximum ripple band:	10%
Current input:	I max. < 200 mA

CANopen interface:

CIA draft standards:	DS301 version 4.0 DS401 version 2.0 with joystick extension
Max. bit rate:	dynamic PDO–mapping variable PDO–Identifier 2 transmit– and 1 receive–PDO
Terminal resistance:	120 Ohm by Dipswitch

Dip switch:

DP1: 1...7 ID0...ID6 Bit0...Bit6 of CAN–Identifier
8...NC

DIP switch SW 1							
Switch no.							Function
7	6	5	4	3	2	1	
ID6	ID5	ID4	ID3	ID2	ID1	ID0	
X	X	X	X	X	X	X	Node ID
OFF	OFF	OFF	OFF	OFF	OFF	OFF	reserved
OFF	OFF	OFF	OFF	OFF	OFF	ON	Node ID=1
OFF	OFF	OFF	OFF	OFF	ON	OFF	Node ID=2
..	..	..	..	..	..	..	..
ON	ON	ON	ON	ON	ON	OFF	Node ID=126
ON	ON	ON	ON	ON	ON	ON	Node ID=127

DP2: 1...3 BD0...BD2 Bit0..Bit2 Baud rate adjustment
4 R bus terminal resistance 120R

DIP switch SW 2				
Switch Nr.				Function
1	2	3	4	
BD0	BD1	ID4		
X		X		Baud rate selection
OFF	OFF	OFF		1 Mbit/sec
ON	OFF	OFF		800 kbit/sec
OFF	ON	OFF		500 kbit/sec
ON	ON	OFF		250 kbit/sec
OFF	OFF	ON		125 kbit/sec
ON	OFF	ON		50 kbit/sec
OFF	ON	ON		20 kbit/sec
ON	ON	ON		10 kbit/sec
			R	Bus–Termination
			ON	Termination 120 Ohm
			OFF	No termination

Analogue input:

4 analogue inputs for wiper
4 analogue inputs for potential surveillance

Resolution: 10 bit of range 0..5 V_{REF}

Digital inputs:

8 digital inputs for switches in handle
4 digital inputs for memory function

Version: Ground switched internal pull–up resistors

Environmental conditions:

EMC:	Spurious radation acc. to EN 50081–2
(complete controller)	Interference rejection acc. to EN 50082–2
Operating temperature:	–40 °C... +75 °C (only electronic)
Store temperature:	–55 °C...+100 °C (only electronic)

Pin assignment:

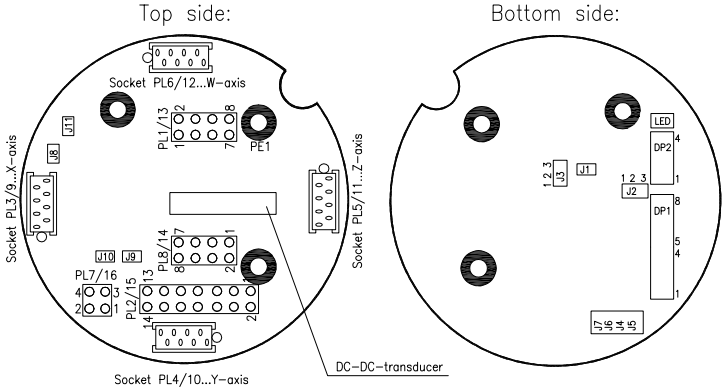

Connections:

PL1/13:	.2... PWR–GND .3...CAN–High .4...PWR .5...CAN–Low .6,8...GND .7...Shield
PL2/15:	.1,14...GND(for switches in grip) .2...9 – Input 0...7 .10...13–memory–input X/Y/Z/W or input 8...11
PL7/16:	Connection of software
PL8/14:	.1,3,5,7 Output 0...3 (Led–cathode) .2,4,6,8 VCC=5 VDC for Led (Rs=1k)
PL3,4,5,6 /9,10,11,12:	Input potentiometer acc. to axis (X,Y,Z,W)

Jumper:

	Type of operation adjustment
J1/3:	CFG0
J4:	CFG1
J5:	CFG2
J6:	CFG3
J7:	

Spohn+Burkhardt
Elektrotechnische Fabrik Blaubeuren

Mauergasse 5
89143 BLAUBEUREN
GERMANY

Tel. +49 7344 171-0 info@spobu.de
Fax +49 7344 171-99 www.spobu.de

Description:

The controllers CS1, VNS0 and NS3 may be equipped with PROFIBUS–DP–interface.
The electronic card has inputs for 4 potentiometers (4 axis analogue), 4 analogue inputs for potential control at centre tap (e.g. wire failure control), as well as digital inputs for direction signals. Furthermore 16 digital inputs for pushbuttons (e.g. in handle) and 8 outputs for LED (5 V, 10 mA) are available.

Supply voltage + U_B:

Operational voltage:	10...30 V, non–bounce protection integrated, filter
Max. operational voltage:	36 V (short circuit protection not granted)
Max. ripple band:	10%
Current input:	U_B = 12 V : I < 110 mA U_B = 24 V : I < 60 mA

Pin assignment profibus:

D–sub plug
9–pin

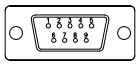

PIN	function
1	NC
2	NC
3	L_B–wire
4	NC
5	NC
6	NC
7	NC
8	L_A–wire
9	NC

PROFIBUS–interface:

Feature:	DP–slave, general profile acc. to DIN 19245 part 3
Max. baud rate:	12 MBaud, automatically detected
Ident no:	AAAB
GSD–file:	TRJoystDP–V2
Terminal resistance:	By sliding switch
Address:	Adjustable from 3...99
Connection:	9 pin D–sub plug

Connection poti via micro–match–socket:

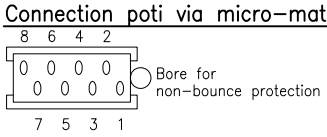

PIN	Assignment
1	Direction forward
2	GND
3	Direction backward
4	Potentiometer wiper
5	Potentiometer +5 V
6	Potentiometer GND
7,8	Potentiometer centre tap (option)

Analogue inputs:

Number of inputs:	4 analogue inputs for wiper 4 analogue inputs for centre tap 4x2 digital inputs for direction contacts Internal pull–up resistors
Resolution of analogue channels:	10 bit of range 0..5 V_{REF}, all 100 µ poled

Digital inputs:

Number of inputs:	16 digital inputs for switches in handle
Function:	Ground switched, internal pull up resistors

Digital outputs:

Number of outputs	8 digital outputs for 10mA at (0,5/4,5) V 4 digital outputs for status–LED

Error messages:

LED	Function	Cause
green	out	no operation
	fast blinking	check parameters
	continuous on	ready for operation
red	out	no failure, bus in cycle
	blinking	no connection to bus
	continuous on	failure

Environmental conditions:

EMC requirements:	Spurions radiation acc. to EN 50081–2
(complete controller)	Interference rejection acc. to EN 50082–2
Operating temperature:	–35 °C...+70 °C (only electronic)
Store temperature:	–40 °C...+80 °C (only electronic)
Dimensions:	See sheet M 7/6

Data:

X–axis:
Y–axis:
Z–axis:
W–axis:

15 14 13 12 11 10 9 8 7 6 5 4 3 2 1 0 Bit

- 9 8 7 6 5 4 3 2 1 0: 10–bit–analogue data
- 11: Lo–limit analogue value
- 12: Hi–limit analogue value
- 13: Wire failure
- 14: Preswitch set
- 15: Revert switch set

Inputs (pushbuttons): 15 14 13 12 11 10 9 8 7 6 5 4 3 2 1 0 Bit

Rotary and sliding switch:

DS1,2: Rotary switch for address
R: Sliding for resistor

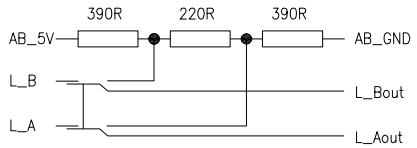

Sliding switch R

With sliding switch R you close L_A respectively L_B or you get connection with next slave.
AB_5 V and AB_GND are electrically isolated of voltage supply.

Pin assignment PROFIBUS–board ESS094:

Top side:

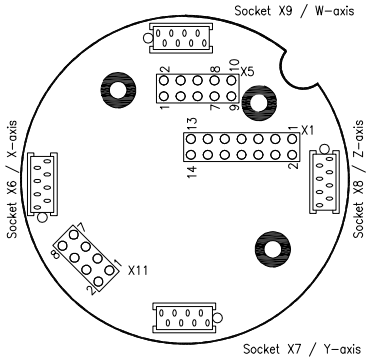

Bottom side

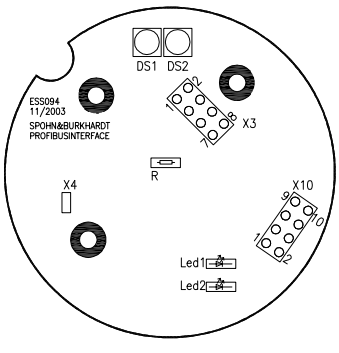

Connections:

X3:	.1,3...GND	.6...L_Aout
	.2...Uss	.7...L_Bout
	.4...PB_A	.8...Housing
	.5...PB_B	
X1:	.1,14...GND (for push buttons)	
	.2...13 – input 1...12	
X11:	.1...4 – input 13–16	
	.5,6...GND	
	.7,8...+5 V	
X5:	.1...8...output 1...8	
	.9..GND	
	.10...+5 V	
X10:	.1,3,5,7...Led–output 1...4	
	.2,4,6,8...+5 VDC	

X6,7,8,9: Input potentiometer acc. to axis (x, y, z, w)

X4: Connection of software

Spohn+Burkhardt
Elektrotechnische Fabrik Blaubeuren

Mauergasse 5
89143 BLAUBEUREN
GERMANY

Tel. +49 7344 171-0 info@spobu.de
Fax +49 7344 171-99 www.spobu.de

Description:

ESS115 is a CANopen interface component with digital in- and outputs, as well as analogue inputs for potentiometers (e.g. axis potentiometers of master controllers/industry joysticks).
In order to calibrate tolerances of the potentiometer the modul is equipped with a teach-in-function.
Thus the average value (zero position of joystick) the maximum deflection and respectively the value for endpoint (full scale) may be set up. Via data-transfer-service you may adjust and store separately for each analogue axis the configuration parameters as dead band, full scale and error trigger.
The analogue inputs are led through convenient ribbon cable for connectors, the digital inputs for spring clamps.
The component is especially suitable for the installation of portable control stations T-011, but also may be installed in other enclosures (operating units, pendants).

Features:

* 4 analogue inputs (0-5 V) for poti 5 Kohm (±20%) switchable separately
* 4 digital inputs (24 V)
* 8 short-circuit-proofed outputs (24 V-50 mA)
* polarity protected supply 10-35 VDC
* range of temperature -20 °C till +70 °C
* point number (Id=1...127) adjustable by DIP switch
* baudrate (up to 1Mbaud) with DIP switch adjustable
* control of broken wire of analogue inputs
* teach-in-function in order to set zero and end values of analogue inputs
* special object register
* resistor R enabled by DIP switch
* LEDs for run, error and status

Assignment:

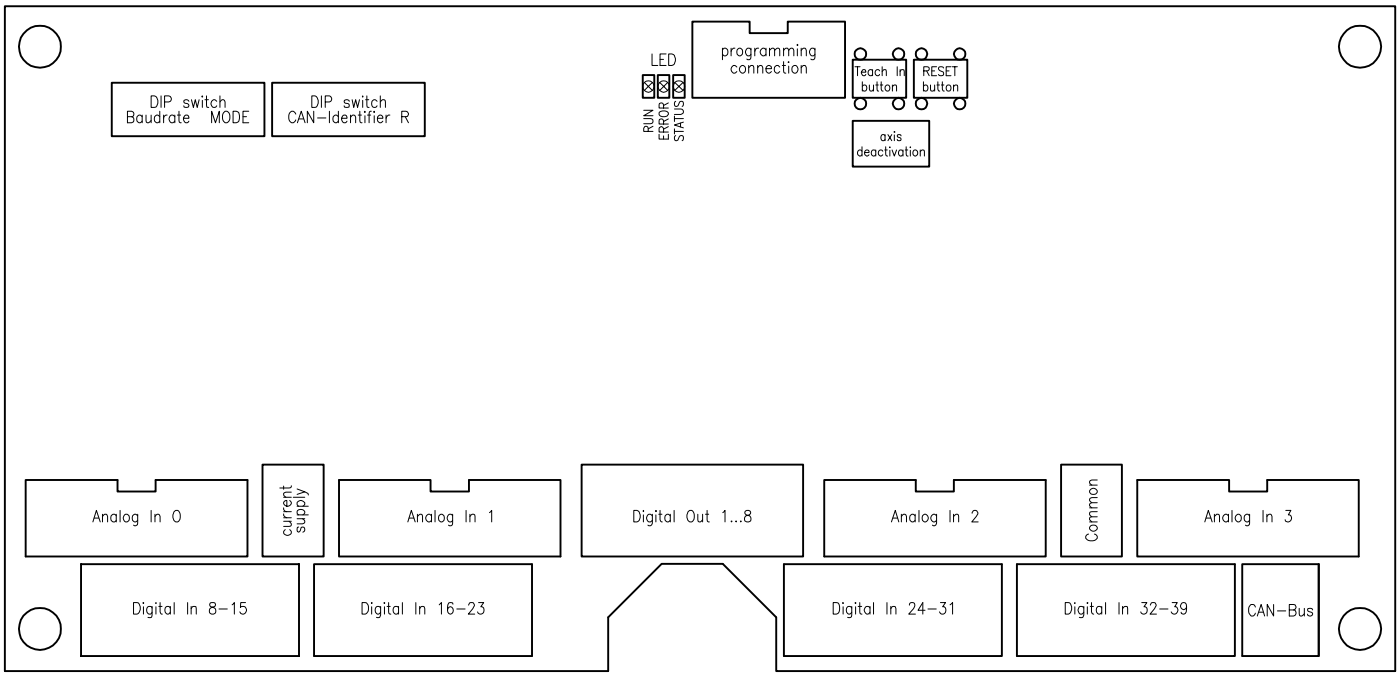

Spohn+Burkhardt
Elektrotechnische Fabrik Blaubeuren

Mauergasse 5
89143 BLAUBEUREN
GERMANY

Tel. +49 7344 171-0 info@spobu.de
Fax +49 7344 171-99 www.spobu.de

Description:

The profinet-interface-component ESS132-1 is equipped with 2 boards electrically coupled and a front plate with M12-connection. This allows to connect a 2-axis joystick CS1G or NS3G onto profinet.
Concerning the analogue conversion of the lever deflection, direction informations of each axis, other devices in joystick handle (e.g. push button, rocker switch,...) the component is equipped with analogue and digital inputs.
Furthermore digital outputs are available in order to activate LED's in the handle.

Supply voltage:

Operational voltage $+U_B$:	12...28 V, non-bounce protection
Max. operational voltage:	30 VDC (short circuit protection not granted)
Max. ripple band:	10%
Current input:	U_B = 12 V : I < 110 mA U_B = 24 V : I < 60 mA
Connection:	round plug, M12, 4 pole, male A-coded

Profinet IO:

	IEC 61158, IEC 61784
Profinet-specification:	V2.2
Software stack:	V3.1
Conformance class:	conformance class B
Physical Layer:	profinet 100Base-TX, fast ethernet, ISO/IEC 8802-3
Output code:	binary
Cycle time:	>= 1 ms (IRT/RT)
Transfer rate:	100 MBit/s, CAT-5 cable shielded (STP), ISO/IEC11801
Address:	per name (given by software), mapping of name-MAC when booting
Integrated switch:	yes
Real-time-class:	RT class 1 frames (RT), RT class 2 frames (RT), RT class 3 frames (IRT)
Support of:	DCP, LLDP, SNMP
GSMDL-file:	DSDML-V2.2-SPOBU-master controller-20110214.xml
Connection port 1 / port 2:	bus-plug M12, 4-pole, female, D-coded
Bus status display:	each port 2 LED

Input/output:

Inputs for the conversion of lever deflection in X-axis:
- 1x analogue input for potentiometer-wiper (resolution max. 12 bits)
- 2x digital input for directions (ground switched, internal pull-up resistors)
- 1x analogue input for controlling wire failure of centre taps
- connection suitable for micro-match-plug

Inputs for the conversion of lever deflection in Y-axis:
- 1x analogue input for potentiometer-wiper (resolution max. 12 bits)
- 2x digital input for directions (ground switched, internal pull-up resistors)
- 1x analogue input for controlling wire failure of centre taps
- connection suitable for micro-match-plug

Digital inputs for internal devices:
- 8x digital input for push buttons (ground switched, internal pull-up resistors)
- connection suitable for Molex plug-case, 12 pole with crimp-contacts

Digital outputs for internal devices:
- 8x digital TTL-output 5 VDC (max. 10 mA)
- connection suitable for Molex plug-case, 12 pole with crimp-contacts

Environmental conditions:

Operating temperature:	-20 °C...+80 °C (only electronic)
Store temperature:	-40 °C...+80 °C (only electronic)
Relative humidity	98% (no condensation)
Protection:	IP00, higher protection is achieved by installation into controller
EMV requirements:	spurious radiation acc. to DIN EN 61000-6-3: 2007
(valid for complete controller)	spurious radiation acc. to DIN EN 61000-6-2: 2006

Front plate:

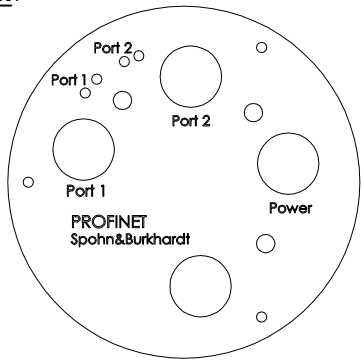

Spohn+Burkhardt
Elektrotechnische Fabrik Blaubeuren

Mauergasse 5
89143 BLAUBEUREN
GERMANY

Tel. +49 7344 171-0 info@spobu.de
Fax +49 7344 171-99 www.spobu.de

Description:

The potentiometer amplifier ESS109 is integrated in enclosure of CS1 and NS3. It's use is to control a proportional valve with maximal 2 A operating current. The input of the amplifier is controlled by potentiometer with centre tap. The subsequent control compares set value with actual value and calculates the pulse wide modulation for the proportional valve. The frequency is approx. 50 Hz. The output estimated by short-circuit is >4 A, furthermore there is an input clearance on board available.

Supply:

Operational supply:	$+U_B$= 10...28 VDC
Maximal current:	<2,5 A
Voltage break:	<9 VDC
Integrated inverse-polarity protection	
ESD protected	

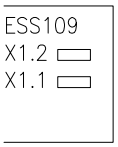

Temperatur range:

Operation:	−25 °C...+65 °C (not condensed)
Stock:	−40 °C...+85 °C

Input:

To be suited for potentiometer with centre tap:	(5-0-5) kOhm
(Limiting dates ohmic values:	2,0...25 kOhm
Supply voltage for potentiometer:	≤5,2 VDC
Connections HF filtrated	

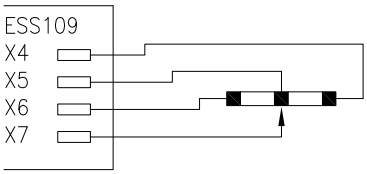

Output:

To be suited for "single coil" and "dual coil" valves only for inductive loads.

Minimal output voltage:	$+U_B$ − 2 V
Pre-current:	0...0,6 A (adjustable with R308)
Maximal current direction A:	0,5...2 A (adjustable with R302)
Maximal current direction B:	0,5...2 A (adjustable with R303)
Frequenzy:	51 Hz (other on request)
Short circuit protected:	>4 A
ESD protected	

Displays:

LED green:	Operational voltage
LED yellow:	Output active

Clearance input:

Only when input is closed the output is activated
Input (X2, X3) is HF-filtrated.

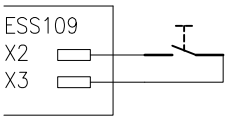

Connections:

According to requirements 1 or 2 micro switches are necessary.

A, "dual coil"

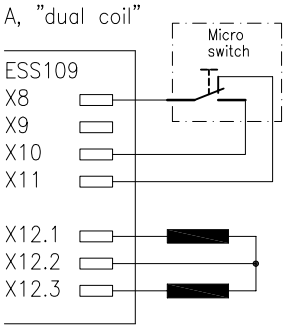

B, "single coil"

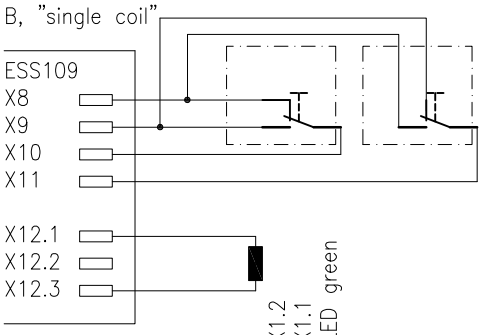

Layout:

Top:

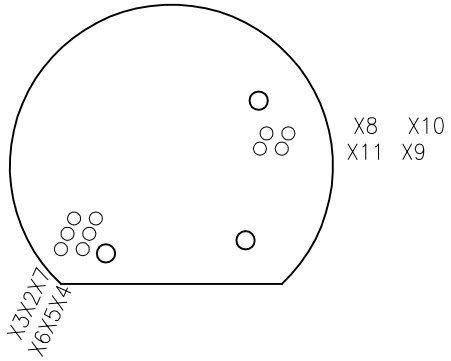

Bottom:

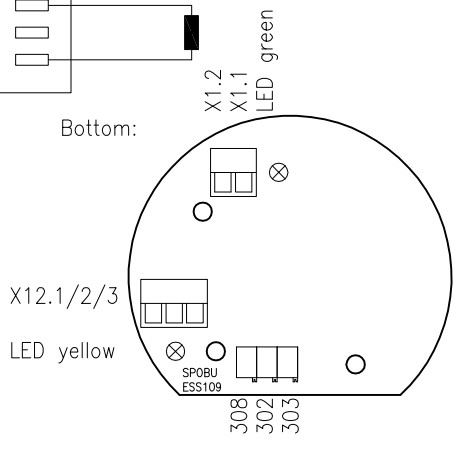

Spohn+Burkhardt
Elektrotechnische Fabrik Blaubeuren

Mauergasse 5
89143 BLAUBEUREN
GERMANY

Tel. +49 7344 171-0 info@spobu.de
Fax +49 7344 171-99 www.spobu.de

Potentiometer amplifier ESS098

List 7 / 2014
16/21

Description:

On the board ESS098 there are two separate amplifiers for potentiometers. Each amplifier converts the ohmic value which is depending on angle, in an output voltage of 6–12–18 V.
The final values (6 V an 18 V) are adjustable by trim potentiometer.
Furthermore it is possible to reverse the characteristic curve by sliding switches.

Output characteristic:

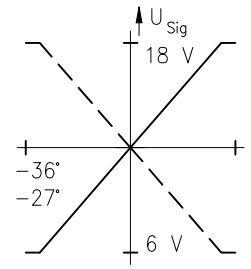

(valid at U_B=24 V)

dashed:
reverse characteristic line
by sliding switch
(S1+S2:X–axis; S3+S4:Y–axis)

Technical data:

Operational voltage:	$+U_B$20...30 VDC Non–bounce protected
Current input:	<100 mA
Operating temperature:	–40 °C to +85 °C
Voltage output:	6(5...7)–18(16...20) VDC
Average voltage:	12 VDC
Signal current:	max. 20 mA (output short circuit protected)
Load resistance:	>10 KOhm
Input potentiometer:	resistance 1...25 KOhm
EMI:	EN 55011:1998 +A1:1999 EN 61000–6–2:2001

Schematic as example for 2 axis joystick:

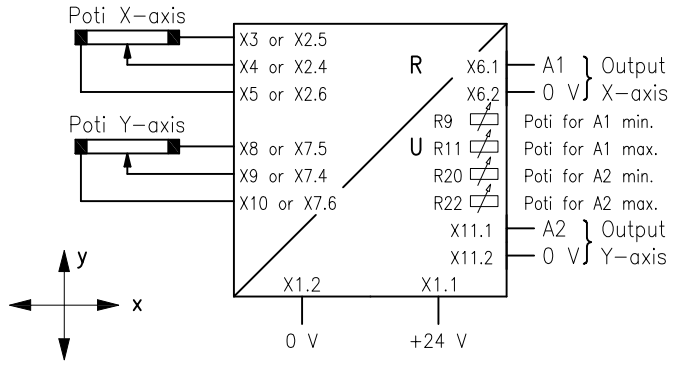

Connections:

Voltage supply:	Screw clamp MKDS1,5/2–5,08
Outputs:	Screw clamp MKDS1,5/2–5,08
Potentiometer:	Micro–match–connector 8 pins or solder pads

Connections:

Component view:

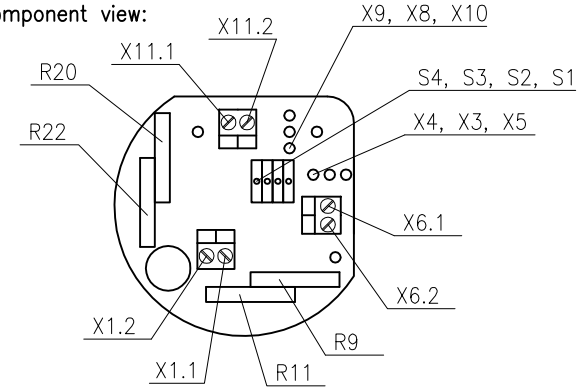

Solder view:

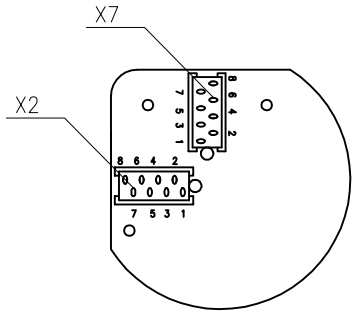

Mounting bores: 3 x ø4,2 mm

Connections X2, X7:

(micro–match 8, firm AMP)

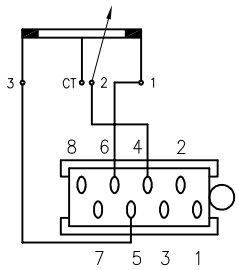

e.g.:
poti G55

Adjustment instruction:

* Connect voltage meter on output 1 or 2
* Adjust potentiometer to maximum value or move lever to maximum
* Adjust maximum voltage (18 V) with R11 or R22
* Adjust potentiometer to minimum value or move lever of joystick to maximum opposite direction
* Adjust minimum voltage (6 V) with R9 or R20
* Note: In case of calibration above mentioned sequence is absolutely

Spohn+Burkhardt
Elektrotechnische Fabrik Blaubeuren

Mauergasse 5
89143 BLAUBEUREN
GERMANY

Tel. +49 7344 171-0 info@spobu.de
Fax +49 7344 171-99 www.spobu.de

Capacitive sensor ESS111 for controller CS1G and NS3G

List 7 / 2014
16/22

Description:

The capacitive system consisting of sensor plate ESS080K and evaluation electronics ESS111 was specially developped for the controllers CS1G and NS3G. The integrated sensor plate may be installed in various handles.
The integrated sensor plate changes its output depending on the distance from hand to sensor.
The sensitivity of evaluation is adjustable by potentiometer.
This specifies the switch point of output (relais and transistor).

Technical data:

Supply voltage:	$+U_B$ 19,2...28,5 VDC
Rated current:	I 0,1 A (without relais)
Relais output:	$I_{max.}$ 1 A U =24 V
Temperature range:	−20 °C...+70 °C

LED display for:

Operating voltage on:	Relais V4: green
Control of sensitivity:	Relais V9: green
Error:	Relais V11: red
Sensor activated:	Relais V18: yellow

Pin assignment ESS111:

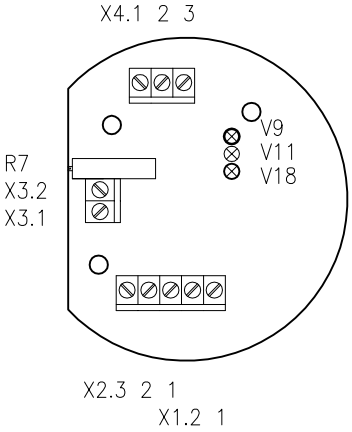

X1 Supply voltage
X1.1 $+U_B$
X1.2 GND (0 V)

X2 Connection to ESS080K
X2.1 Output
X2.2 GND (0 V)
X2.3 Shield (0 V)

X3 Transistor output
X3.1 GND (0 V)
X3.2 open drain

X4 Relais output
X4.1
X4.2
X4.3

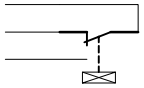

Design:
Sensor
not
activated

X1/X2/X3/X4 = Screw clamp

Transistor output: open drain output

The transistor will get conductive in case of operating sensor.

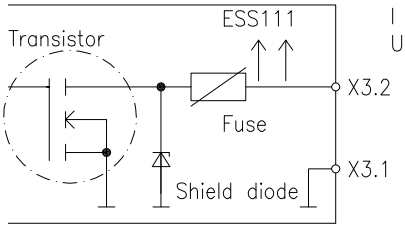

$I_{max.}$ = 500 mA
$U_{max.}$ = 30 V

Pin assignment ESS080K:

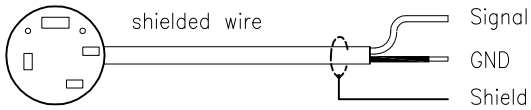

Adjustment instruction:

* Connect ESS111 and ESS080K
* Supply voltage
* Adjust requested sensitivity with potentiometer R7 and at the same time control it with LED V9.
  In case V9 is illuminated at requested sensitivity, adjustment is ok, if not: sensor adjustment is in prohibited range because sensitivity is too high.
  Correction in order to establish certain function: Diminuish with R7 the sensitivity until LED V9 is illuminating.

Spohn+Burkhardt
Elektrotechnische Fabrik Blaubeuren

Mauergasse 5
89143 BLAUBEUREN
GERMANY

Tel. +49 7344 171-0 info@spobu.de
Fax +49 7344 171-99 www.spobu.de

Board ESS089
potentiometer amplifier for controllers CS1G, NS3G

List 7 / 2014
16/23

Description:

On the board ESS098 there are two separate amplifiers with common voltage supply for potentiometers.
Each amplifier converts the ohmic value which is depending on angle in an output current.
The maximal value (=20 mA) and the initial value (=4 mA) are adjustable by trimmers.

Technical data:

Operational voltage:	U_B	24 VDC ±15%
Periodic deviation		5%
Current input:	I_V	< 120 mA
Voltage output:	I_O	4...20 mA
Average voltage:	R_L	<= 600 Ohm
Signal current:	U_K	24 VDC
(by U_B = 24 VDC)	I_{Kmax}	15 mA
Temperature range		−20 °C bis +60 °C
TK:		ca. 0,1% / 10 °C
Potentiometer:	R_{pot}	2k5...5 kOhm
EMI:		EN55022 until 1 GHz
Valid for installation		EN61000−4−3
into controller		EN61000−4−6
CS1G, NS3G)		EN61000−4−2

Characteristic:

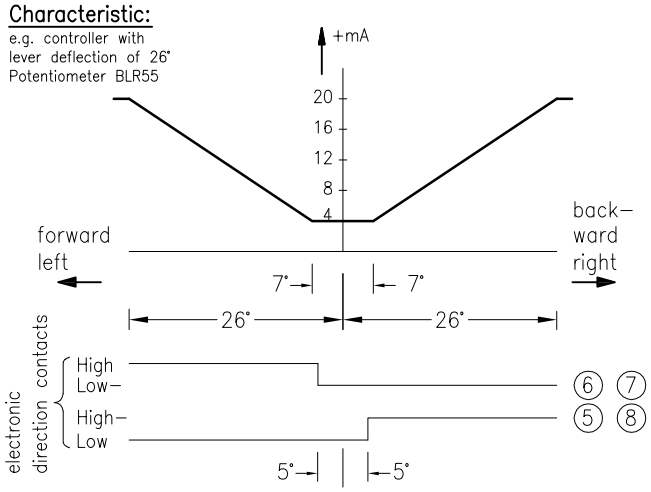

Schematic as example for 2 axis joystick:

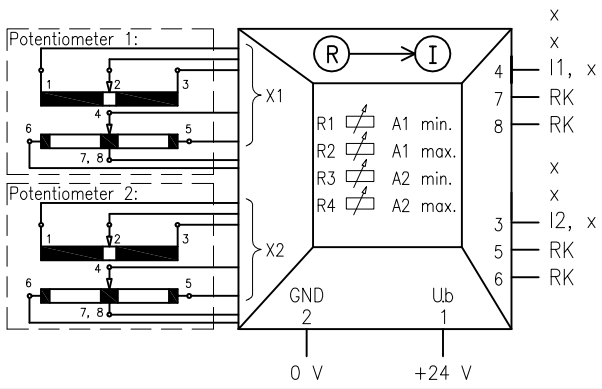

Connections:

Voltage supply: Screw clamp
Outputs: Screw clamp
Potentiometer: Micro−match−connector 8 pins

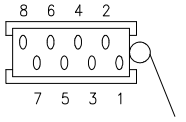

Bores for protection against reverse polarity

1	Direction switch forward/left
2	GND
3	Direction switch backward/right
4	Wiper
5	Poti ending
6	Poti beginning
7,8	Poti centre tap

Connections:

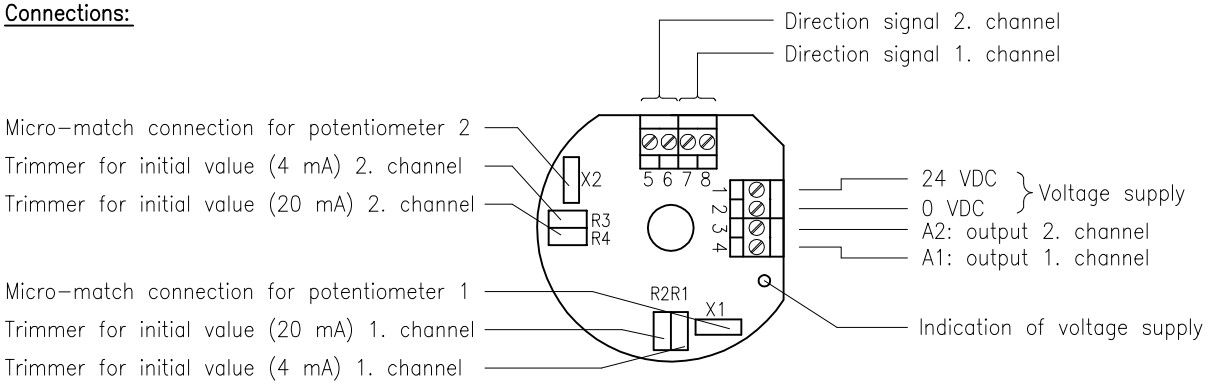

Adjustment instruction:

* Connect voltage meter on output 1 or 2
* Adjust potentiometer to maximum value or move lever to maximum
* Trim final current value with R2 and respectively with R4
* Adjust potentiometer to minimum value or move lever of joystick to centre
* Trim R1 and respectively R3 to initial current value
* Note: In case of calibration above mentioned sequence is absolutely

Spohn+Burkhardt
Elektrotechnische Fabrik Blaubeuren

Mauergasse 5
89143 BLAUBEUREN
GERMANY

Tel. +49 7344 171-0 info@spobu.de
Fax +49 7344 171-99 www.spobu.de

Portable control station T–011, insulated IP65

Dimensions see sheet M 20/1–2

List 7 / 2014
20/2

Fittings:

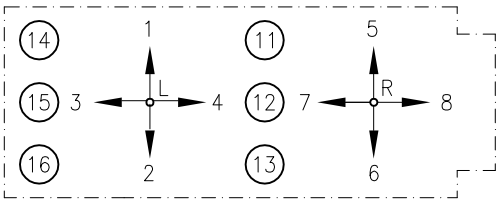

Pos. 1–4, 5–8... controller
Pos. 11–16... control devices ø22,5 mm
or 16 mm programm



Photo with VCS0 controller,
control devices ø22,5 mm,
rotating cable entry

Type		Spobu Id.Nr.	EUR
T–011	Portable control station, yellow – without bores – without inserts – with shoulder straps – roll–over bar – rotating cable entry (M32x1,5 for cable ø13,5–20 mm)	20371	
TC011	Portable control station , yellow – with boresin cover: pos. 1–4 + 5–8 VCS0 controller pos. 11, 12, 14–16 ø22,5 mm pos. 13 ø16,2 mm – without inserts – with shoulder straps – roll–over bar – rotating cable entry (M32x1,5 for cable ø13,5–20 mm)		EUR

Equipments:

Controllers:

M0N	see sheet 4/1.....
VCS0	see sheet 7/1.....
CS1	see sheet 7/5.....
ST0	see sheet 5/2.....

Push buttons, lamps, selector switch see sheet 2/2A + 2/2B

On request completely wired with control cable and plug connection available.

Spohn+Burkhardt
Elektrotechnische Fabrik Blaubeuren

Mauergasse 5
89143 BLAUBEUREN
GERMANY

Tel. +49 7344 171-0 info@spobu.de
Fax +49 7344 171-99 www.spobu.de

Portable control station IDV–CS065, IP65

Dimensions see sheet M 20/4

List 7 / 2014
20/4

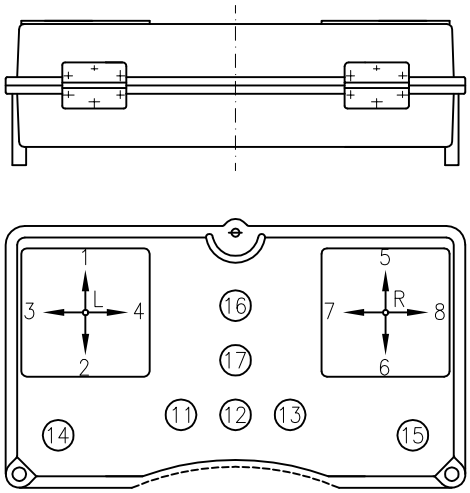



Material: GFK
Available in yellow or version in black surface resistance.

Type	Housing without inserts, without bores with breast plate and shoulder straps	EUR
IDV –CS065	yellow	
IDVS–CS065	black, surface resistance maximum 24 V	
Foot rack		

Equipments:

Controllers

VCS0	see sheet 7/4.....
CS1	see sheet 7/5.....
VNS0	see sheet 9/1.....
NNS0	see sheet 9/N.....

Push buttons, lamps etc. see sheet 2/2A + 2/2B
Cable glands

Note:
The attachment plate for controllers are already integrated within upper part.
If you need a whole plane surface on top you have to erase prepared attachment plate e.g. by milling.

Spohn+Burkhardt
Elektrotechnische Fabrik Blaubeuren

Mauergasse 5
89143 BLAUBEUREN
GERMANY

Tel. +49 7344 171-0 info@spobu.de
Fax +49 7344 171-99 www.spobu.de

Portable control station T–56, IP65

Dimensions see sheet M 20/5

List 7 / 2014
20/5

Features:

- robust compact portable control station with various installation possibilities
- circular gasket between upper– and lower part
- clip of stainless steel

Layout of installation:

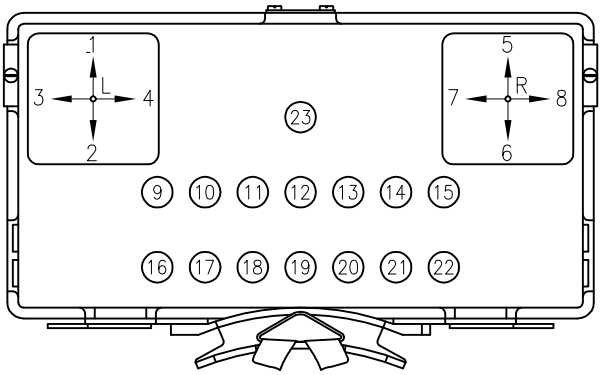



Photo:
TB–56 with controllers VNS0
and control devices ø22,5 mm

Enclosure without inserts With foot rack of stainless steel and strap	EUR	additional with breast plate	EUR
Colour: yellow T –56 grey TG –56 black, antistatic TS –56 supply voltage, maximum 24 V		TB –56 TGB–56 TSB–56	
Additional price for detachable breast plate **BA** Price reduction: delivery without foot rack Cable gland	on request		on request

Equipments:

Controllers:

SM0, GM0	see sheet 4/1.....
ST0	see sheet 5/1.....
VCS0	see sheet 7/1.....
CS1	see sheet 7/5.....
VNS0	see sheet 9/1.....

Push buttons, lamps etc. see sheet 2/2A + 2/2B
Indicators
LCD–displays

Note:
In case of order please give position and size of cable gland.
On request we supply control station with drillings, inserts and wiring according to client's requirement.

Spohn+Burkhardt
Elektrotechnische Fabrik Blaubeuren

Mauergasse 5
89143 BLAUBEUREN
GERMANY

Tel. +49 7344 171-0 info@spobu.de
Fax +49 7344 171-99 www.spobu.de

Portable control station T97A, alu casing IP65

Dimensions see sheet M 20/6

List 7 / 2014
20/6



Powder coating yellow

Casing withshoulder straps without inserts	EUR

Additionals:
Controller VCS0 see sheet 7/1...
Controller VNS0 see sheet 9/1...
Push buttons, lamps etc. acc. to sheet 2/2A + 2/2B

On request:
Socket
Wiring
Different colours
Different sizes

Spohn+Burkhardt
Elektrotechnische Fabrik Blaubeuren

Mauergasse 5
89143 BLAUBEUREN
GERMANY

Tel. +49 7344 171-0 info@spobu.de
Fax +49 7344 171-99 www.spobu.de

Portable control station T–022A, insulated IP65

Dimensions see sheet M 20/8

List 7 / 2014
20/8

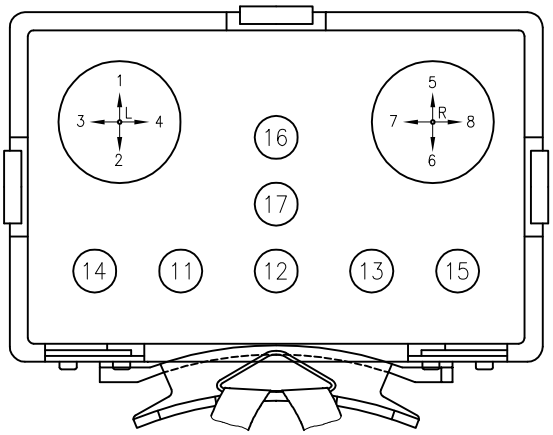

Material PA66



Housing without inserts with shoulder straps and breast plate	for controller M0	EUR	for controller VCS0	EUR
Colour: yellow black–surface resistance for maximum 24 V	TM–022A TSM–022A		TC–022A TSC–022A	
Foot rack				
Equipments: Controller M0N see sheet 4/1.... VCS0 see sheet 7/1.... Push buttons, lamps etc. see sheet 2/2A + 2/2B without breast plate, strap				
Engraving: Symbols for escutcheon plate or text for sign on the button. Each symbol Each word				

Spohn+Burkhardt
Elektrotechnische Fabrik Blaubeuren

Mauergasse 5
89143 BLAUBEUREN
GERMANY

Tel. +49 7344 171-0 info@spobu.de
Fax +49 7344 171-99 www.spobu.de

Portable control station TP022, TP022A, IP65

Dimensions see sheet M 20/9

List 7 / 2014
20/9



Photo:
TP022 with controllers GM0N
and devices ø22,5 mm

Features:

- robust compact portable control station of steel plate or aluminium with various installation possibilities, mounting plate of high-grade steel or aluminium
- circular gasket between mounting plate and upper part
- other sizes on request, version complete in stainless steel available

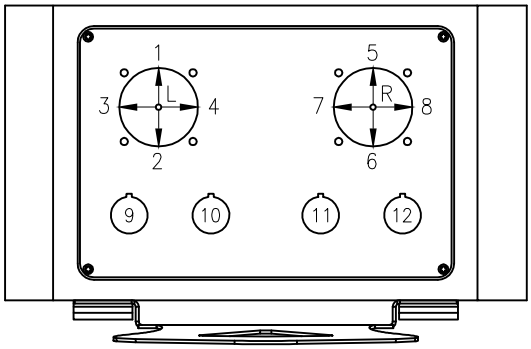

Housing without inserts, with breast plate and shoulder straps	steel	EUR	aluminium	EUR
Colour: yellow	TP022		TP022A	
grey	TPG022		TPG022A	
black	TPS022		TPS022A	

Equipments:

Controllers:

SM0, GM0	see sheet 4/1.....
ST0	see sheet 5/1.....
VCS0	see sheet 7/1.....
CS1	see sheet 7/5.....

Push buttons, lamps etc. see sheet 2/2A + 2/2B

Note:

In case of order please give position and size of cable inlet.
On request we supply control station with bores, installations, engraving and wiring according to client's requirement.

Spohn+Burkhardt
Elektrotechnische Fabrik Blaubeuren

Mauergasse 5
89143 BLAUBEUREN
GERMANY

Tel. +49 7344 171-0 info@spobu.de
Fax +49 7344 171-99 www.spobu.de

Pendant H–011, insulated IP65,

Dimensions see sheet M 21/1

List 7 / 2014
21/2

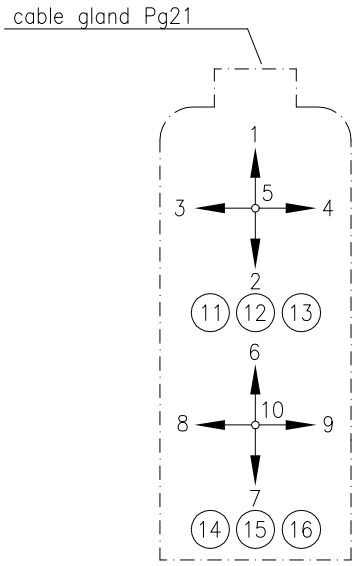





Type		Spobu Id.Nr.	EUR
H–011	Pendant yellow – without bores – without inserts – roll–over–bar – cable gland	24714	
HC011	Pendant yellow – boresin cover: pos. 1–5 + 6–10 for controller VCS096... pos. 11, 12, 14–16 ø22,5 mm pos. 13 ø16,2 mm – without inserts – roll–over–bar – cvable gland	14071	

Equipments:

Controllers:

MON	see sheet 4/1.....
VCS096	see sheet 7/1.....
CS1	see sheet 7/5.....
ST0	see sheet 5/2.....

Push buttons, lamps, selector switch see sheet 2/2A + 2/2B

On request completely wired with control cable and plug connection.

Spohn+Burkhardt
Elektrotechnische Fabrik Blaubeuren

Mauergasse 5
89143 BLAUBEUREN
GERMANY

Tel. +49 7344 171-0 info@spobu.de
Fax +49 7344 171-99 www.spobu.de

Pendant HV, HBV, steel enclosure IP65,

Dimensions see sheet M 21/3

List 7 / 2014
21/3







Pictures are showing pendants with controllers VNS0 and control devices ø22,5 mm.

Steel plate enclosure grey powder-coated	Type	Steel enclosure EUR	
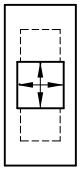	HV29M HV35M HV48M HV60M		
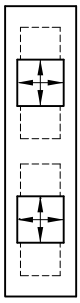	HV35MM HV48MM HV60MM HV70MM		

Steel plate enclosure grey powdered	Type	Steel enclosure EUR	
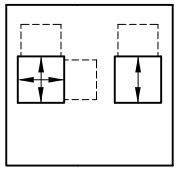	HBV35GV HBV48GV HBV60GV HBV70GV		
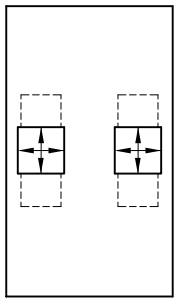	HBV35MM HBV48MM HBV60MM HBV70MM		

Equipments:

Controllers:

VCS0	see sheet 7/4.....
CS1	see sheet 7/5.....
VNS0	see sheet 9/1.....
NNS0	see sheet 9/N.....

Fittings in handle see sheet 2/1....
Control devices see sheet 2/2A + 2/2B
Potentiometer see sheet 14/...

On request:
- special dimensions
- eexd version
- special colour

By order specify cable diameter.

Spohn+Burkhardt
Elektrotechnische Fabrik Blaubeuren

Mauergasse 5
89143 BLAUBEUREN
GERMANY

Tel. +49 7344 171-0 info@spobu.de
Fax +49 7344 171-99 www.spobu.de

Pendant HD, steel enclosure IP65

Dimensions see sheet M 21/5

List 7 / 2014
21/5

Notes:

- Cable entry with stress relief and cable clamp
- Mechanical support brackets
- Carry handle
- Support frame
- Metallic escutcheon plate (without engraving)
- RAL 7032 grey powder coated



Type	Length	Number of pushbuttons ø22,5 mm	EUR
HD19	190 mm	6	
HD29	290 mm	10	
HD35	350 mm	12	
HD48	480 mm	18	
HD60	600 mm	22	

Additionals:

Buttons see sheet 2/2A + 2/2B

2-steps push button RT-MTO-MT97 (Schlegel)

2-steps mechanical locked double pushbutton XES-D 1281 (TE)

Engraving: Each symbol
Each word

On request:

Other size and version

Spohn+Burkhardt
Elektrotechnische Fabrik Blaubeuren

Mauergasse 5
89143 BLAUBEUREN
GERMANY

Tel. +49 7344 171-0 info@spobu.de
Fax +49 7344 171-99 www.spobu.de



Console units NS0PK — without inserts, without arm rest, without collapsible chair

Basic price each console unit EUR

Type NS0PKN NS0PKU
rectangular console units

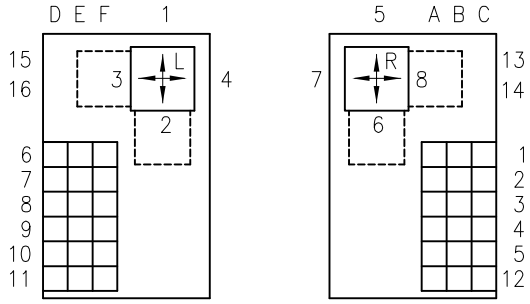

Places 13–16 only available for controllers VCS0, VNS0–G– und VNS0–H–

	Controller without spring return	Controller with return	EUR	+ each double cont. EUR
with operating block VCS0 see sheet 7/4..				
	VCS0E	VCS0ER		
	VCS0V	VCS0VR		
with operating block VNS0/NS0 see sheet 9/2 and 9/5				
	VNS0–FE	VNS0–FER		
	VNS0––FV	VNS0––FVR		
	NS0––FGGV	NS0––FGGVR		

Equipments:

Control devices see sheet 2/2A + 2/2B
Additionals in handle see sheet 2/1...
Standard circuit see sheet S 40/1..
DGO see sheet 13/1
Potentiometer, encoder, terminals and wiring

Additionals: EUR

Engraving: Each symbol
Each word
Cross gate for VCS0 KK
Cross gate for VNS0 KK
Special gate for VCS0 SK
Special gate for VNS0 SK
Each arm rest AS1–18
Collapsible chair KSGF, with spring born, see sheet M 22/8A
Collapsible chair KSHC hydraulic damped and spring born, see sheet M 22/8B
Each steel enclosure console 440x220x120 mm

Spohn+Burkhardt
Elektrotechnische Fabrik Blaubeuren
Mauergasse 5
89143 BLAUBEUREN
GERMANY
Tel. +49 7344 171-0 info@spobu.de
Fax +49 7344 171-99 www.spobu.de

Console stands SV0K, on request IP54

Dimensions see sheet M 22/2

List 7 / 2014
22/2



Console stands SV0K — without inserts, without arm rest, without collapsible chair

Basic price without inserts EUR

	spring return without	spring return with	EUR	+ each double cont. EUR
with operating block VCS0 see sheet 7/4..				
	VCS0E	VCS0ER		
	VCS0V	VCS0VR		
with operating block VNS0 see sheet 9/2 and 9/5				
	VNS0–FE	VNS0–FER		
	VNS0––FV	VNS0––FVR		
	NS0––FGGV	NS0––FGGVR		

Type SV0NK SV0UK
with rectangular console units
colour grey

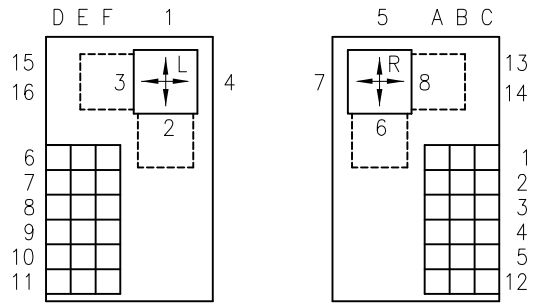

Places 13–16 only available for controllers VCS0, VNS0–G– und VNS0–H–

Odering example: Operator console SV0U
Pos. 1–2 lowering–hoist, circuit 40 controller VNS0–VR
Pos. 3–4 left–right, circuit 30
Pos. A1 push button "I"
Pos. AB23 selection switch 5. steps a.s.o.
Ratings see sheet 1/1
Buttons see sheet 2/2A + 2/2B
Additionals in handle see sheet 2/1...
Standard circuit see sheet S 40/1..
DGO see sheet 13/1
Potentiometer, encoder, terminals and wiring } on request

Additionals:

	Type:	EUR
Engraving: Each symbol		
Each word		
Cross gate for VCS0	KK	
Cross gate for VNS0	KK	
Special gate for VCS0	SK	
Special gate for VNS0	SK	
Each arm rest AS1–18		
Collapsible chair KSGF, with spring born, see sheet M 22/8A		
Collapsible chair KSHC hydraulic damped and spring born, see sheet M 22/8B		
Each steel enclosure console 440x220x120 mm		

Spohn+Burkhardt
Elektrotechnische Fabrik Blaubeuren
Mauergasse 5
89143 BLAUBEUREN
GERMANY
Tel. +49 7344 171-0 info@spobu.de
Fax +49 7344 171-99 www.spobu.de

Unit operating within cabins
in the range of hoistings (cranes, containers...)
as well as for heavy industry



SV0BK



SV0G

Types

- SV0B, SV0BK:
  - standard operator console
  - damped collapsible seat KSG with:
    longitudinal adjustment, stepless height adjustment and backrest adjustment.
    Backrest and seat made of hard-wearing vinyl upholstery foam, seat with felt inserts and air holes
  - powder-coated metal parts (standard)
  - cable entry through base

- SV0G:
  - operator console with collapsible seat KSG... or
  - comfort seat ACTIMO S722:
    long ergonomic backrest with enforced side profiles for optimal sitting position, as well as mechanical suspension with height adjustment,
    various manual adjustments:
    seat height, seat tilt, seat cushion depth,
    longitudinal seat adjustment relative to consoles,
    lumbar support, backrest and weight adjustment,
    armrests adjustable in height and tilt.
  - consoles with steel hinges
    production according to client's requirement in our own sheet metal production
  - powder-coated metal parts (standard)
  - side panels removable
  - cable entry through base

- SV0, SV0K:
  - fibre glass consoles
  - powder-coated metal pillars (standard)
  - cable entry through base
  - separate collapsible chair KSG available

- NS0P:
  - fibre glass console

Options

- installation of controllers, control devices, other instruments
- completely wired on terminals or PLC
- special painiting for metal sheet parts
- stainless steel consoles

- for operator console SV0B, SV0BK:
  hydraulically damped collapsible seat KSHC
  replaceable cushion
  consoles according to client's requirements

- for operator console SV0G:
  console dimensions according to client's requirements
  integrated heating with ventilator
  monitor holder
  keypad holder

- for consoles NS0P:
  steel consoles according to client's requirement

- for seat S722:
  headrest
  2-point belt, 4-point belt
  electrical heating
  pneumatic suspension with compressor
  passive climate system with activated carbon system,
  cushion in genuine leather available

Applications

- further information see list 7 sheet 22/1...,
  dimensions see see M 22/1...

Spohn+Burkhardt
Elektrotechnische Fabrik Blaubeuren

Mauergasse 5
89143 BLAUBEUREN
GERMANY

Tel. +49 7344 171-0 info@spobu.de
Fax +49 7344 171-99 www.spobu.de

Operator console SV0BK, on request IP54

Dimensions see sheet M 22/3

List 7 / 2014
22/3







Operator consoles SV0BK without inserts,
with arm rest AS1–18,
with collapsable chair KSGF

Basic price without attachments **EUR**

Type **SV0BK**
With rectangular console units

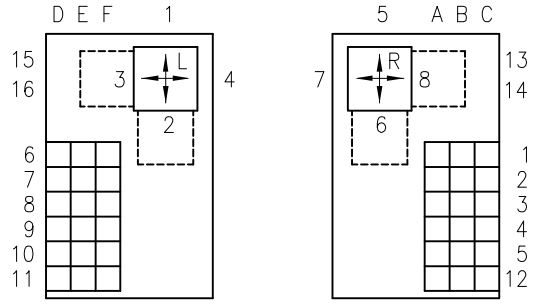

Places 13–16 only available for controllers VCS0,
VNS0–G– und VNS0–H–

	spring return without	spring return with	EUR	+ each double cont. EUR
with operating block VCS0 see sheet 7/4..				
	VCS0E	VCS0ER		
	VCS0V	VCS0VR		
with operating block VNS0/NS0 see sheet 9/2 and 9/5				
	VNS0–FE	VNS0–FER		
	VNS0––FV	VNS0––FVR		
	NS0––FGGV	NS0––FGGVR		

Odering example: Operator console SV0BK
Pos. 1–2 lowering–hoist, circuit 40 controller VNS0–VR
Pos. 3–4 left–right, circuit 30
Pos. A1 push button "I"
Pos. AB23 selection switch 5. steps a.s.o.
Ratings see sheet 1/1
Buttons see sheet 2/2A+B
Additionals in handle see sheet 2/1...
Standard circuit see sheet S 40/1..
DGO see sheet 13/1
Potentiometer, encoder, terminals and wiring } on request

Additionals:	**Type:**	EUR
Engraving: Each symbol		
Each word		
Cross gate for VCS0	KK	
Cross gate for VNS0	KK	
Special gate for VCS0	SK	
Special gate for VNS0	SK	
Collapsable chair hydraulic damped, KSHC see sheet M 22/8B		
Each steel enclosure 440x220x120 mm		

Spohn+Burkhardt
Elektrotechnische Fabrik Blaubeuren

Mauergasse 5
89143 BLAUBEUREN
GERMANY

Tel. +49 7344 171-0 info@spobu.de
Fax +49 7344 171-99 www.spobu.de

Operator console SV0G

Dimensions see sheet M 22/3–1 + M 22/3–2

List 7 / 2014
22/3A







Type	Dimensions	Basic price EUR
SV0G–KSGF	M 22/3–1	
SV0G–KSHC	M 22/3–1	
SV0G–S722C–B–F	M 22/3–2	
SV0G	without chair	

Equipment:	SV0G–KSGF	SV0G–S722C–B–F	SV0G
Arm rest	AS1–18	AS1–18 (on request at the chair)	AS1–18
side panel removable	inside	outside	inside
Chair	collapsible chair	comfort–chair–Actimo	without

Special equipments chair S722 see sheet 22/4F

Spohn+Burkhardt
Elektrotechnische Fabrik Blaubeuren

Mauergasse 5
89143 BLAUBEUREN
GERMANY

Tel. +49 7344 171-0 info@spobu.de
Fax +49 7344 171-99 www.spobu.de

Komfort Schwingsitz S722 ACTIMO

Comfort seat S722 ACTIMO

List 7 / 2014
22/4C

1
Neigungsverstellung der Rückenlehne 10°–80°.
Infinitely variable backrest adjustment 10°–80°.

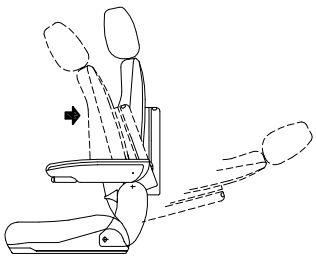



2
Bandscheibenstütze in Höhe und Wölbung verstellbar.
Lumbar adjustment, knob for curvature and vertical position.

3
Sitzlängsverstellung 200 mm
Standard forward and backward adjustment of 200 mm.

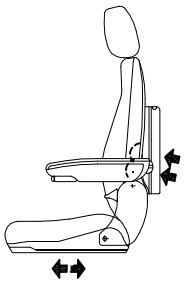

4
Sitzkissen Tiefenverstellung.
Seat cushion depth adjustment.

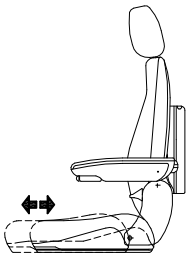

5
Neigungsverstellung der Sitzfläche von 3°–11°.
Infinite seat cushion angle adjustment from 3°–11°.

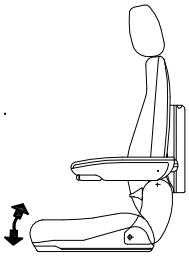

6
Mechanische Federung mit zwei Zugfedern und hydraulischem Stoßdämpfer, abgedeckt mit Faltenbalg, um Staubdichtigkeit und Unfallschutz zu gewährleisten.
Inklusive integrierter Höhenverstellung von 60 bzw. 80 mm in 3 bzw. 4 Stufen und Gewichtseinstellung von 50–150 kg.
Mechanical suspension with double coil springs and hydraulic shock absorber. Covered with rubber gaiter in order to guarantee closeness of dust and protection.
Integrated height adjustment of 60 till 80 mm in 3 or 4 steps and weight adjustment of 50–150 kg.

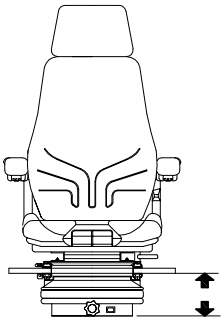

7
Ergonomisch gestaltete Kompaktpolster mit Kunstleder– oder Stoffbezug. (Sitzbezug wird unter Vakuum geformt und mit Polyurethanschaum ausgeschäumt).
Die Polsterteile sind jederzeit leicht austauschbar.
Polster: Velour blau meliert, Velour schwarz oder Kunstleder schwarz.
Ergonomically shaped cushion is of vacuum formed and poured–in–place foam material, in either PVC or cloth textured surface.
Cushion can be easily replaced.
Upholstery: Velour blue mottled, velour black or vinyl black.

Optional:

8
Höhen– und neigungsverstellbare Kopfstütze.
Headrest height and tilt adjustable.

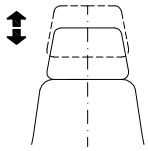

9
Passives Klima–System.
Feuchtigkeit, die beim Schwitzen entsteht, wird aus dem Bezugsmaterial in die darunterliegende Aktivkohleschicht geleitet dort gespeichert und erst wieder nach Verlassen des Sitzes an die Umgebungsluft abgegeben.
Passive climate system.
Humidity due to transpiration is led from upholstery to below placed active cool layer.
There it is stored and after leaving the seat it will be given back to ambiance.

10
Pneumatische Federung mit Kompressor inclusive automatischer Gewichtsanpassung.
Pneumatic suspension with compressor inclusive automatic weight adjustment.

11
Höhen– und neigungsverstellbare Armstütze.
Armrest with height and tilt adjustment.

12
Becken– oder 4–Punkt Gurt.
Lap belt or 4–point seat belt.

Spohn+Burkhardt
Elektrotechnische Fabrik Blaubeuren

Mauergasse 5
89143 BLAUBEUREN
GERMANY

Tel. +49 7344 171-0 info@spobu.de
Fax +49 7344 171-99 www.spobu.de

Comfort seat ACTIMO S722

List 7 / 2014
22/4F

Cushion exchangeable *)

Horizontal adjustment
150 mm *)

Seat cushion adjustment
60 mm *)

Seat tilt 3–11° *)

Mechanical suspension
with weight adjustment
approx. 50–150 kg with
height adjustment 0–30–60–80 mm
by lifting seat or
height adjustment 70 mm and
±14° tilting



Option: headrest
height adjustment 100 mm
tilt 38°

Case at back *)

Mechanical
lumbar support *)

Backrest adjustment
10°–0–80° *)

*) Standard equipment

		Type	EUR	
Upper part with seat cushion tilt, seat cushion depth adjustment mechanical lumbar, support case	for operator chair FSAD with 2 sets of horizontal adjustment and rod FSA012F with 90 mm u–attachment	S722AD		Basic price
	for operator chair FSRD with 2 sets of horizontal adjustment and rod PT02	S722RD		
	for operator chair SV1C with 1 set of horizontal adjustment	S722C		
Upholstery	cotton black	S		Without additional price
	cotton blue/grey melange	B		
	vinyl black	KLS		
	upholstery with passive climate system based on activated carbon, dark/grey melange		on request	Additional price
Heating in seat and backrest, only with upholstery cotton blue/grey melange	12 VDC 7 A 80 W	H12		
	24 VDC 3,4 A 80 W	H24		
Adjustable headrest	same upholstery as seat and backrest cushion	K		
Lap belt **Lap belt**	2 point, static 2 point with automatic roll up	G AG		
Belt harness		HG		
Pair of armrests standard 2) **Pair of armrests narrow** 2) **Pair of armrests short** 2)	80x380 mm 54x380 mm 80x320 mm } adjustable height and tilt	A AS AK		
Suspension with weight adjustment	mechanical incl. height adjustment 80 mm 4–steps (142481)	F		
	mechanical, tilting and height adjustment (±14° or 70 mm height adjustment, only with SV1C possible)	HFN		
	pneumatic with compressor and autom. weight adjustment as well as height adjustment 12 VDC 9 A 108 W	P12		
	pneumatic with compressor and autom. weight adjustment as well as height adjustment 24 VDC 7,5 A 180 W	P24		
Seat adjustment motor driven 1)	without suspension, horizontal, horizontal, height and tilt adjustment 12 VDC 25 A	M		
Manual tilting system 1)	without suspension, ±14° tilting, or 80 mm height adjustment, additional height 70 mm	HN		
Seat contact	1 NO, maximal contact load: 5 V–300 mA/24 V–80 mA	SK0		

1) May also be delivered with additional suspension.
Seat height will be 70 mm more, therefore footrest may be necessary.
2) Usually armrests AS1–30 used on consoles.
Armrests at backrest is not possible for all units.

Ordering example: S722C–B–K–F

Spohn+Burkhardt
Elektrotechnische Fabrik Blaubeuren

Mauergasse 5
89143 BLAUBEUREN
GERMANY

Tel. +49 7344 171-0 info@spobu.de
Fax +49 7344 171-99 www.spobu.de

Option: detensor active lamellae

Horizontal adjustment
150 mm *)

Seat cushion adjustment
60 mm *)

Mechanical suspension
with weight adjustment
ca. 50–130 kg with
height adjustment 0–30–60–80 mm
by lifting seat or
height adjustment 70 mm,
±14° tilting



Option: headrest
height adjustment 100 mm
tilt 38°

Mechanical
lumbar support *)

Backrest adjustment
10°–0–80° *)

*) Standard equipment

		Type	EUR	
Upper part with Y cut out adjustment mechanical lumbar	for operator chair FSAD with 2x horizontal adjustment and rod FSA012F with 90 mm u–attachment	S210YAD		Basic price
	without rod for SV1C	S210YC		
Detensor active lamellae	orthopetics, permanent relieve of spinal column and intervertebral disk	RD		Additional price
Upholstery	outside vinyl anthracite, inside cotton anthracite	S		
	leather black without detensor active lamellae	RNL		
	leather black with detensor active lamellae	RNLRD		
Electrical backrest adjustment	12 VDC	LE		
Heating in seat and backrest	12 VDC without option "RD" 12 VDC with option "RD"	H HRD		
Dual adjustable backrest	Cervical tilt adjustment, adjustable backrest side support and detensor active lamellae	HWS/V+ SV+RD		
Adjustable headrest		K		
2 point seatbelt		G		
4 point seatbelt		HG		
Pair of armrest 2)		A		
Suspension with weight adjustment	mechanical height adjustment incl. 80 mm (4–steps) 142481	F		
	mechanical tilting and height adjustment (±14° or 70 mm)	HFN		
	(only with SV1C possible)			
	pneumatic with compressor autom. weight adjustment as well as height adjustment	12 VDC 9 A 108 W 24 VDC 7,5 A 180 W	P12 P24	
Seat adjustment motor driven 1)	12 VDC 25 A without suspension	M		
Manual tilting system	without suspension, ±14° tilting, 80 mm height adjustment, additional height 70 mm	HN		
Seat contact	evaluation electronics 24 V	SKO		

1) May also be delivered with additional suspension. Seat height will be 70 mm more, therefore footrest may be necessary.
Usually armrests AS1–30 used on consoles.

2) Armrests at backrest is not possible for all units.

Ordering example: S210YC–K–F

Spohn+Burkhardt
Elektrotechnische Fabrik Blaubeuren

Mauergasse 5
89143 BLAUBEUREN
GERMANY

Tel. +49 7344 171-0 info@spobu.de
Fax +49 7344 171-99 www.spobu.de

Universal operating units in the range of hoistings and industry approved with new and innovative design



FSAD



FSRD

Types

- FSA, FSAD: driver seat for various applications
- FSR, FSRD: driver seat for extended possibilities of adjustments and new design
- FSM, FSMD: driver seat with electrical seat adjustments for demanding customers
- FSK, FSKD: driver seat with plastic top cover
- FSAL,FSALD: narrow driver seat for small cabins

Features

- designed according to ergonomic aspects for relaxed work
- comfort seat with long well-formed backrest and reinforced side contour for optimal seating position, as well as mechanical suspension with height adjustment
- optimal working position for each body size (DIN 33402) due to various adjustments: seat height, seat tilt, seat cushion depth, combined longitudinal adjustment of consoles and seat, adjustable lumbar support, backrest adjustment, weight adjustment, armrests adjustable in height and tilt
- consoles with hinges made of steel plate, production according to client's requirement in our own sheet metal production
- robust steel base with collapsible cover under seat for easy access to terminals. For rotary units, terminals are integrated in base console
- powder-coated metal parts
- rotary motion without backlash, stepless lock via excentric brake or lock by notches, ranging from 180° right to 90° left

Options

- dimensions and forms according to client's requirement
- consoles with sloped covers
- optimal view on control devices and instruments

- stainless steel consoles
- removable side panels (for FSR...)
- special painting
- additional mechanical adjustment for consoles in longitudinal and vertical direction (for FSR...)
- consoles swivelling outwards (for FSR...)
- installation of controllers, control devices, other instruments..
- completely wired on terminals or PLC
- motorized rotary motion

- monitor holder
- keypad holder

- integrated heating with ventilator (for FSR...)

- two part footrest made of aluminium or single footrest with grid

- headrest
- 2- point seat belt, 4-point seat belt
- electrical seat adjustment
- V-cut
- electrical heating
- pneumatic suspension with compressor 12 or 24 VDC
- passive climate system with activated carbon system
- detensor active lamellae for permanent relief of spine

- upholstery in genuine leather

- sliding system for complete unit

- further information see list 7 sheet 22/5..., dimension sheets see M22/5...

Spohn+Burkhardt
Elektrotechnische Fabrik Blaubeuren

Mauergasse 5
89143 BLAUBEUREN
GERMANY

Tel. +49 7344 171-0 info@spobu.de
Fax +49 7344 171-99 www.spobu.de

Operator consoles FSA, FSAD

Dimensions see sheet M 22/5A + M 22/5B

List 7 / 2014
22/5

Hydraulic damped and suspended operating unit with lateral consoles for the installation of controllers, control devices, digital and indicating instruments. Various adjustments manually in order to get optimal seat position.

Seat and backrest cushion easy to replace

Lumbar support

In order to have easy access to the terminals in base you have to tilt back seat

Standard: black powder coated



Head rest on request

Height adjustable and tiltable armrests AS1–30 on console or armrest at backrest

Consoles with hinged covers inclinable and tiltable upwards with staying device

Flexible hoses for wires M40 or M50

For FSAD:
ball bearing rotating system with friction or notching disc in the range from 180° on right to 90° on left side

Version	Version	Dimensions	Basic price without inserts EUR	Additional price EUR
FSA	Stationary:	M 22/5A		
	Integrated cabin heating: 2 KW 4 KW			
FSAD	Rotating:	M 22/5B		
	Footplate (2 pieces)			
	height– and tiltable feet plate	FS02–16B + FS02–16–2A		

On request:
- installation of controllers
- installation of control devices Ø22,5 mm see sheet 2/2A...
- wiring onto terminals
- consoles dimensions according to client's requirement
- options refering to seat S722 see sheet 22/4F
- seat S210Y with Y–cut see sheet 22/4G
- special painting
- precision turntable for higher demands

Spohn+Burkhardt
Elektrotechnische Fabrik Blaubeuren

Mauergasse 5
89143 BLAUBEUREN
GERMANY

Tel. +49 7344 171-0 info@spobu.de
Fax +49 7344 171-99 www.spobu.de

Hydraulic damped seat with spring type S722 see sheet 22/4F

Adjustments: Weight
Height 3 steps 60 mm
Forward–backward–whole unit
Forward–backward–only seat
Backrest inclination +10°–80°
Lumbar support
Seat cushion inclination
Seat cushion horizontal adjustable 60 mm

Seat cushions can be replaced
Head rest on request





Type	Model	Dimensions	Basic price ohne Einbauten EUR	Additional price EUR
FSK	Stationary Integrated cabin heating. 2 KW 4 KW	M 22/5i		
FSKD	Rotating Footplate Height– and tiltable feet plate	M 22/5iA		

Controllers, push buttons see list 7
Seat additional equipment see sheet 22/4F

Spohn+Burkhardt
Elektrotechnische Fabrik Blaubeuren

Mauergasse 5
89143 BLAUBEUREN
GERMANY

Tel. +49 7344 171-0 info@spobu.de
Fax +49 7344 171-99 www.spobu.de

Operator consoles FSRH, FSRHD

Dimensions see sheet M 22/5R-1

List 7 / 2014
22/5R-1

Hydraulic damped and spring loaded suspension seat S210Y according to 22/4G

Rotary version with various functions for console base
- top side with hinged cover and suspension fixing
- bottom side with ball bearing fixing
- integrated rotary locking device
- cable slide
- possible to install terminals, transformer...
- inner space accessible by tilting chair backwards



Illustration showing:
with 2 splited foot rest with folding footrest (tube)
wider and reinforced pneumatic suspension
cervical tilt adjustment, adjustable backrest side support, detensor active lamella, rotary type

Headrest

Armrest on console

Consoles horizontal turnable outwards, tiltable and collapsible upwards

Seat tilt adjustable

Both longitudinal slides with double lock

Rotation (FSRHD) with ball bearing. Excentric brake stepless or spring loaded pin with stop positions, rotation range of −90°...+180°

Type	Version	Basic price without additionals EUR	Additional price EUR
FSRH	Stationary:		
	Integrated cabin heating. 2 kW 4 kW		
FSRHD	Rotating:		
	Footrest special footrest adjustable		

Additionals seat S210Y:

P12/P24	pneumatic suspension (P12 = 12 VDC, P24 = 24 VDC)	
PF12/PF24	wider and reinforced pneumatic suspension (PF12 = 12 VDC, P24 = 24 VDC)	
RD	detensor active lamella	
HWS/V+SV+RD	cervical tilt adjustment, adjustable backrest side support and detensor active lamella	

Other options: sheet 22/4G

Controllers, push buttons see list 7
On request: wiring onto terminals, PLC−components

Spohn+Burkhardt
Elektrotechnische Fabrik Blaubeuren

Mauergasse 5
89143 BLAUBEUREN
GERMANY

Tel. +49 7344 171-0 info@spobu.de
Fax +49 7344 171-99 www.spobu.de

Operator consoles FSRH–G, FSRHD–G

Dimensions see sheet M 22/5R–2

List 7 / 2014
22/5R-2



Hydraulic damped and suspended seat
according to 22/4F + 22/4G
Seat (without consoles) adjustable in tilting ±14°

Headrest

Leather–armrests tiltable with 6 steps up to 30°

Angle adjustment of seat cushion inclination
3°–11° (only S722)

Rotation of FSRHD–G with ball bearing and
excentric brake for stepless positioning or spring
loaded pin for fixed position in the
range of –90°...+180°

Longitudinal seat adjustment
forward–backward ±75 mm
Longitudinal adjustment for seat+consoles
combined forward–backward ±75 mm

Consoles:
–stepless tilting –20° (down) to +50° (up)
–consoles manually horizontal turnable from
5° inner to 25° outer position
–longitudinal console adjustment ±50 mm



Photo:
two part footrest with folding footrest (tube)
with rotatable version and seat S210Y
Reinforced pneumatic suspension
Cervical tilt adjustment, adjustable backrest
side support and detensor active lamellae,
authentic leather

Type	Model	Basic price without additionals EUR	Additional price EUR
FSRH–G–S722	Stationary with seat S722		
FSRH–G–S210Y	Stationary with seat S210Y (with Y–cut)		
FSRHD–G–S722	Rotary with seat S722		
FSRHD–G–S210Y	Rotary with seat S210Y (with Y–cut)		
	2–part footrest, adjustable 2–part footrest adjustable 2–part footrest, hinged side wards		
Additional: P12/P24	pneumatic suspension (P12 = 12 VDC, P24 = 24 VDC)		
PF12/PF24	wider and reinforced pneumatic suspension (PF12 = 12 VDC, P24 = 24 VDC)		

Hand rest pad with leather
Adjustable armrests

Further options: sheet 22/4F + 22/4G
Installation of controller and control devices according to list 7
Wiring on terminals

Spohn+Burkhardt
Elektrotechnische Fabrik Blaubeuren

Mauergasse 5
89143 BLAUBEUREN
GERMANY

Tel. +49 7344 171-0 info@spobu.de
Fax +49 7344 171-99 www.spobu.de

Operator consoles FSRH2-G, FSRHD2-G

Dimensions see sheet M 22/5R-3

List 7 / 2014
22/5R-3



Photo:

Hydraulic damped and suspended seat according to 22/4F + 22/4G

Seat (without consoles) adjustable in tilting ±14°

Headrest

Leather-armrests tiltable with 6 steps up to 30°

Angle adjustment of seat cushion inclination 3°-11° (only S722)

Rotation of FSRHD-2G with ball bearing:
-Excentric brake for stepless positioning
or spring loaded pin for fixed position in the range of -90°...+180°

Longitudinal seat adjustment
forward-backward ±75 mm
Longitudinal adjustment for seat+consoles
combined forward-backward ±75 mm

Consoles:
-stepless tilting -20° (down) to +50° (up)
-consoles manually horizontal turnable from 5° inner to 25° outer position

Type	Model	Basic price without additionals EUR	Additional price EUR
FSRH-2G-S722	Stationary with seat S722		
FSRH-2G-S210Y	Stationary with seat S210Y (with Y-cut)		
FSRHD-G-S722	Rotary with seat S722		
FSRHD-G-S210Y	Rotary with seat S210Y (with Y-cut)		
	Footrest: 2-part footrest, adjustable 2-part footrest adjustable 2-part footrest, hinged side wards		
Additional: P12/P24	pneumatic suspension (P12 = 12 VDC, P24 = 24 VDC)		
PF12/PF24	wider and reinforced pneumatic suspension (PF12 = 12 VDC, P24 = 24 VDC)		
Hand rest pad with leather			
Additional sideconsole			

Further options: sheet 22/4F + 22/4G
Installation of controller and control devices according to list 7
Wiring on terminals
Client logo attached at head rest
Special coating of seat S210

Spohn+Burkhardt
Elektrotechnische Fabrik Blaubeuren

Mauergasse 5
89143 BLAUBEUREN
GERMANY

Tel. +49 7344 171-0 info@spobu.de
Fax +49 7344 171-99 www.spobu.de

Operator consoles FSR, FSRD

Dimensions see sheet M 22/5RA + M 22/5RB

List 7 / 2014
22/5R

Hydraulic damped and suspended operating unit with lateral consoles for the installation of controllers, control devices, digital and indicating instruments. Various adjustments manually in order to get optimal seat position.

Seat and backrest cushion easy to replace

Lumbar support

In order to have easy access to the terminals in base you have to tilt back seat



Illustration showing: with hinged foot rest

Head rest on request.

Adjustable armrest at seat.

Consoles turnable outwards, tilt and hinged.

Flexible hoses for wires M40 or M50

For FSRD:
ball bearing rotating system with friction or notching disc in the range from 180° on right to 90° on left side

Version	Version	Dimensions	Basic price without inserts EUR	Additional price EUR
FSR	Stationary:	M 22/5RA		
	Integrated cabin heating: 2 KW 4 KW			
FSRD	Rotating:	M 22/5RB		
	Foot rest (2 pieces) hinged foot rest FA03			

On request:
- installation of controllers
- installation of control devices ø22,5 mm see sheet 2/2A...
- wiring onto terminals
- consoles dimensions according to client's requirement
- options refering to seat S722 see sheet 22/4F
- seat S210Y with Y-cut see sheet 22/4G
- special painting
- precision turntable for higher demands

Spohn+Burkhardt
Elektrotechnische Fabrik Blaubeuren

Mauergasse 5
89143 BLAUBEUREN
GERMANY

Tel. +49 7344 171-0 info@spobu.de
Fax +49 7344 171-99 www.spobu.de



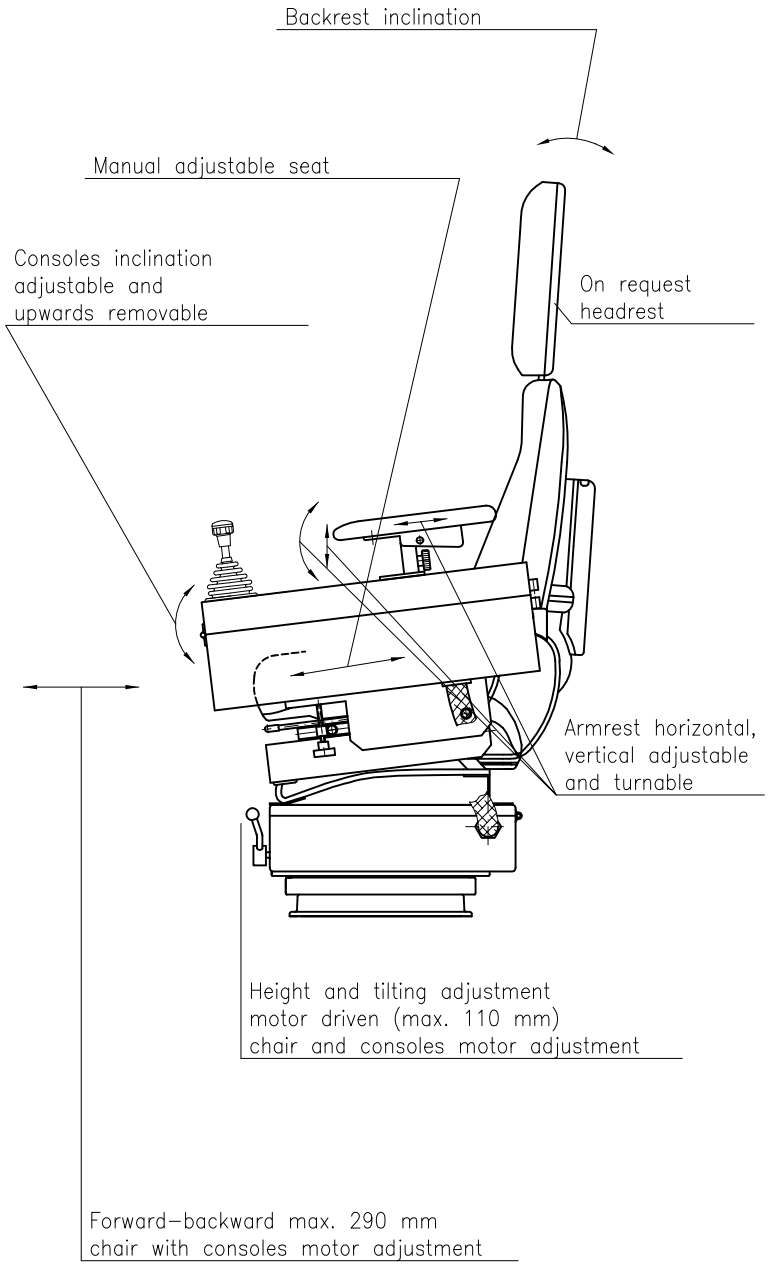

Motorized adjustment 12 VDC
ca. 25 A

Type	Model	Dimensions	Basic price without additionals EUR
FSMD	without suspension	M 22/6	
FSMDPF24	with suspension and foot rest	M 22/6A	

Controllers, push buttons see list 7
other dimensions, painting on request.

Seat additional equipment
see sheet 22/4F

Spohn+Burkhardt
Elektrotechnische Fabrik Blaubeuren

Mauergasse 5
89143 BLAUBEUREN
GERMANY

Tel. +49 7344 171-0 info@spobu.de
Fax +49 7344 171-99 www.spobu.de

SV1C



SV1CJF



Features

- designed according to ergonomic aspects for relaxed work to meet the standards for seat and adjustment comfort
- comfort seat with long well-formed backrest and reinforced side contour for optimal seating postition as well as mechanical suspension with height adjustment
- optimal working position for each body size (DIN 33402) due to various adjustments:
  seat height, seat tilt, seat cushion depth, longitudinal seat adjustment relative to consoles, lumbar support, adjustable backrest, weight adjustment, armrests adjustable in height and tilt
- consoles with hinges made of steel plate production according to clients's requirement in our own sheet metal production
- robust steel base with collapsible cover under seat for easy access to terminals
- powder-coated metal parts RAL7032 (pepple grey), special painting on request
- rotary motion without backlash, steppless lock via excentric brake or lock by notches, in the range from 180° right to 90° left

Applications

- Application for lifts, control rooms anywhere where many devices must be controlled

Options

- consoles sizes and forms according to clients's requirement
- consoles with sloped covers for optimal view on control devices and instruments
- stainless steel consoles
- removable side panels
- additional mechanical adjustment for consoles in longitudinal and vertical direction
- installation of controllers, control devices, other instruments...
- completely wired on terminals or PLC
- motorized rotary motion
- monitor holder
- keypad holder
- integrated heating with ventilator
- rotary two-part footrest made of aluminium or single foot rest with grid
- headrest
- 4-point seat belt
- electrical seat adjustment
- V-cut
- seat heating
- pneumatic suspension with compressor, 12 or 24 VDC

- further informations see sheet 22/7...,
  dimensions M22/7...

Spohn+Burkhardt
Elektrotechnische Fabrik Blaubeuren

Mauergasse 5
89143 BLAUBEUREN
GERMANY

Tel. +49 7344 171-0 info@spobu.de
Fax +49 7344 171-99 www.spobu.de

Operator consoles rotatable SV1C

Dimensions see sheet M 22/7A + M 22/7B

List 7 / 2014
22/7

Rotating with stepless brake,
ball bearing, cable entry in centre
Hydraulic spring damped.
Seat S722 with cotton or vinyl cover,
adjustable in all directions see sheet 22/4C.
Cushions easy to exchange, steel enclosure.
Arm rest optionaly, at seat or on console





With comfortable seat, no controllers.

Type	With foot rest	Dimensions	Basic price without additionals EUR
SV1C--		M 22/7A	
	SV1C--F		
SV1CJ--		M 22/7B	
	SV1CJ--F		

Wiring
Other dimensions
Manual adjusted consoles
Electrical
Electrical rotation
Special finish
Other seat
Head rest

— on request



Controllers and push buttons see list 7

Seat additional equipment
see sheet 22/4F

Spohn+Burkhardt
Elektrotechnische Fabrik Blaubeuren

Mauergasse 5
89143 BLAUBEUREN
GERMANY

Tel. +49 7344 171-0 info@spobu.de
Fax +49 7344 171-99 www.spobu.de

Collapsible chair **KSGF / KSPGF**
* folding of backrest and seat
* height stepless adjustable (135 mm)
* upper seat part longitudinal adjustable
* backrest adjustable
* suspension


KSGF


KSGF

Version	Seat cover	EUR
KSGF	Back seat covered in hard wearing vinyl with internal foam padding With suspension	
KSPGF	Seat with removeable cotton cover with suspension, seat with felt insert for comfort.	

Collapsible chair **KSHC / KSHCP**
* folding of backrest and seat
* upper seat part longitudinal adjustable
* backrest adjustable
* hydraulic suspension


KSHC

Version	Seat cover	EUR
KSHC	Back seat covered in hard wearing vinyl with internal foam padding With suspension	
KSHCP	Seat with removeable cotton cover with suspension, seat with felt insert for comfort.	

Spohn+Burkhardt
Elektrotechnische Fabrik Blaubeuren

Mauergasse 5
89143 BLAUBEUREN
GERMANY

Tel. +49 7344 171-0 info@spobu.de
Fax +49 7344 171-99 www.spobu.de

Operator console FSMMD–SHN, FSMMDER–SHN

Dimensions see sheet M 22/9–1A + M 22/9–1B

List 7 / 2014
22/9-1

Designed according to ergonomic aspect in order to work easy and tireless.
To install large range of standard equipments as well as electrical and manual adjustments is possible.
Version FSMMDER–SHN allows to operate while sitting or standing.
Memory control on request available.

Motorized console adjustment up–down

Motorized console adjustment forward–backward

Motorized console adjustment tilt

Consoles manually horizontal turnable

Motorized seat adjustment forward–backward up–down tilt

Footrest manually adjustable forward–backward (for FSMMDER–SHN also rotatable)



Headrest adjustable height and tilting

Adjustable backrest 10°–0–80°

Lumbar support

Seat tilt 3°–11°

Seat cushion adjustable forward–backward

Pneumatic suspension with automatic weight and seat height adjustment

Operating unit	Dimensions	Adjustments consoles			Without inserts EUR
		up–down	forward–backward	tilt	
FSMMD–SHN	M 22/9–1A	200 mm	150 mm	5°–0–10°	
FSMMDER–SHN	M 22/9–1A	300 mm	250 mm	5°–0–10°	

Memory control (12 positions)
Motorized rotation
Control enclosure backside

Additional prices:

On request:
- Comfort seat S210Y with y–cut (photo) see sheet 22/4G
- Comfort seat ACTIMO S722 see sheet 22/4F
- installation of controllers and control devices
- wiring on terminals /PLC
- other console dimensions
- consoles with stainless steel or powder coated, colour according to requirements

Spohn+Burkhardt
Elektrotechnische Fabrik Blaubeuren

Mauergasse 5
89143 BLAUBEUREN
GERMANY

Tel. +49 7344 171-0 info@spobu.de
Fax +49 7344 171-99 www.spobu.de

Operator consoles FSALV... with controller housing

Dimensions see sheet M 22/10A

List 7 / 2014
22/10A

Narrow, compact operating unit especially designed for space constraints.
Version FSALV... for the installation of VCS0..., CS1... master controller and up to 5 control devices ø22,5 mm.

Seat and backrest cushion
to replace

Armrests with attached boxes (max 2 kg),
tilt and longitudinal adjustment
as well as turnable sidewards.

Stationary or rotary

Standard: black powdered



Photo:
Sonderausführung mit Anbaugehäuse

Head rest on request

Lumbar support

Seat cushion depth adjustment

Infinite seat cushion angle
adjustment

Flexible hoses for wires

Type	Version		Basic price without additionals EUR
FSALV	Stationary		
FSALVDS	Rotary with turning disc		
FSALVD	Rotary with ball bearing		

On request:
- installation of controller see sheet 4/1, 7/4, 7/5
- installation of control devices ø22,5 mm see sheet 2/2A...
- wiring onto terminals
- options refering to seat S722 see sheet 22/4F
- seat S210Y with Y-cut see sheet 22/4G
- special painting

Spohn+Burkhardt
Elektrotechnische Fabrik Blaubeuren

Mauergasse 5
89143 BLAUBEUREN
GERMANY

Tel. +49 7344 171-0 info@spobu.de
Fax +49 7344 171-99 www.spobu.de

Sliding system with wheels:

EUR

acc. to SM 13008–7
mechanical interlock by hand (lever)

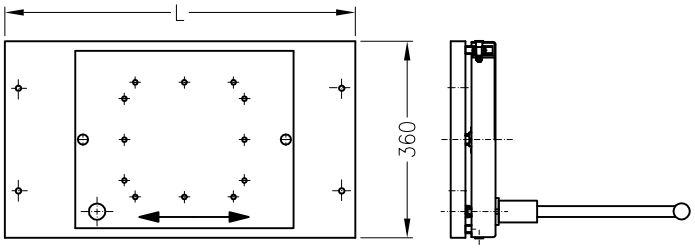

L = total length
travel F = L – 420

L <1500
1500 ≤ L <2000
2000 ≤ L <2500

Sliding system with rails:

acc. to SM13008–8
mechanical interlock by hand (lever)

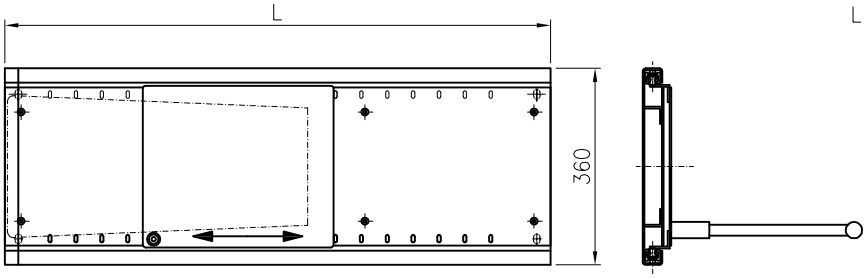

L = total length	F = travel
L = 900	F ≈ 440
L = 1000	F ≈ 520
L = 1100	F ≈ 600
L = 1200	F ≈ 760
L = 1300	F ≈ 860
L = 1400	F ≈ 930
L = 1500	F ≈ 1080

Sliding system with rails:

acc. to SM 13008–5
mechanical interlock by foot (pedal)

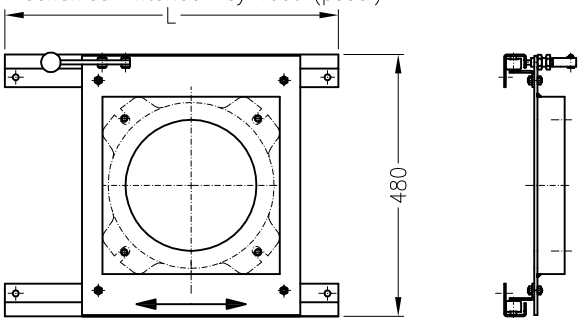

L = total length	F = travel
L = 900	F ≈ 440
L = 1000	F ≈ 520
L = 1100	F ≈ 600
L = 1200	F ≈ 760
L = 1300	F ≈ 860
L = 1400	F ≈ 930
L = 1500	F ≈ 1080

Additional price:

Option: sliding system with electromagnetic interlock
acc. to SM 13008–6

Motorized sliding system with rails:

acc. to SM13008–9

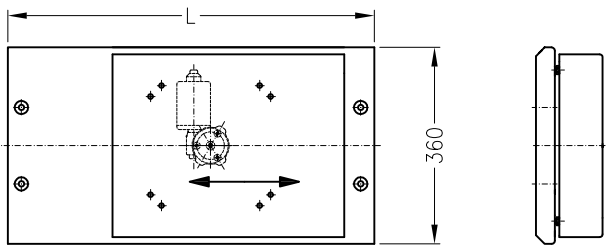

L = total length	F = travel
L = 900	F ≈ 440
L = 1000	F ≈ 520
L = 1100	F ≈ 600
L = 1200	F ≈ 760
L = 1300	F ≈ 860
L = 1400	F ≈ 930
L = 1500	F ≈ 1080

Spohn + Burkhardt
Elektrotechnische Fabrik Blaubeuren

Mauergasse 5
89143 BLAUBEUREN
GERMANY

Tel. +49 7344 171-0 info@spobu.de
Fax +49 7344 171-99 www.spobu.de

Operator consoles FSB, FSBD

Dimensions see sheet M 22/12A

List 7 / 2014
22/12



Illustration showing:
with 2 splited foot rest,
rotary type and seat S722.

Hydraulic damped and
spring loaded suspension seat
according to 22/4F + 22/4G

Headrest

Armrest on console

Seat tilt adjustable 3°–11° (S722 only)

Rotation (FSBD) with ball bearing.
Excentric brake stepless or
spring loaded pin with stop positions,
rotation range of –90°...+180°.

Consoles:
–height adjustable ±45 mm
–inclinable downward and upward } ±22°
–tilting around longitudinal axis
–tilting inward and outward
–swivel range 180°
–longitudinal travelling 350 mm



Type	Version	Basic price without additionals EUR	Additional price EUR
FSB–A	Stationary with S722		
FSB–K	Stationary with S210Y with Y–cut		
FSBD–A	Rotating with S722		
FSBD–K	Rotating with S210Y (with Y–cut)		
	2 splited foot rest, special footrest adjustable		

Additionals seat S722:

Tilt adjustment manually
Longitudinal seat adjustment with double lock slides

Other options: sheet 22/4F + 22/4G

Controllers, push buttons, see list 7
On request: wiring onto terminals

Spohn+Burkhardt
Elektrotechnische Fabrik Blaubeuren

Mauergasse 5
89143 BLAUBEUREN
GERMANY

Tel. +49 7344 171-0 info@spobu.de
Fax +49 7344 171-99 www.spobu.de

SF

IP42

250 V~ 5 A

30 V= 2 A



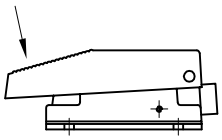

SF-OD

IP56

250 V~ 5 A

30 V= 2 A



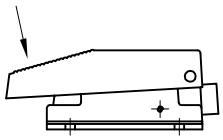

Ordering example	Basic price EUR	Additional price for circuit EUR		
		1 step:	1 step:	2 steps:
SF 1 OD 2 Type — 22 Circuit diagram — Degree of protection —	SF SF-OD	1	2	22

Circuit diagram

1:

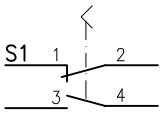

2:

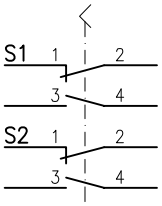

22:

S1: 1-2
S1: 3-4
S2: 1-2
S2: 3-4

0	1	2
	x	x
x		
x	x	
		x

x=closed

S1:

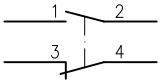

S2:

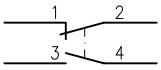

FTO

IP54

R

250 V~ 10 A

30 V= 2 A



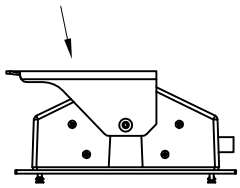

Ordering example	Basic price EUR	Additional price for circuit diagram EUR		Additional price for attached potentiometer EUR
		1 step	potentiometer	
FTO 10 18P PW0045-... Type — Circuit diagram — Potentiometer —	FTO	10	18P	PW0045-5K-90°

Circuit diagram

10:

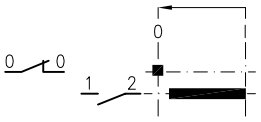

18P:

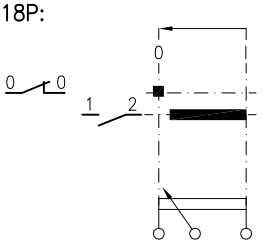

Potentiometer:

Potentiometer PW0045..: wire wound, 1.5 Watt, max. 24 V=

Spohn+Burkhardt
Elektrotechnische Fabrik Blaubeuren

Mauergasse 5
89143 BLAUBEUREN
GERMANY

Tel. +49 7344 171-0 info@spobu.de
Fax +49 7344 171-99 www.spobu.de

FST | IP54 | R | 250 V~ 5 A | 30 V= 2 A



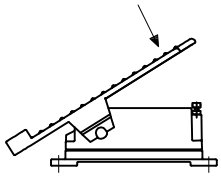

FSTS | IP54 | R | 250 V~ 5 A | 30 V= 2 A



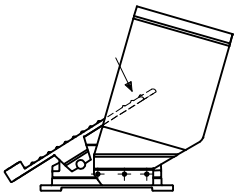

Ordering example	Basic price EUR	Additional price for circuit diagram EUR		Additional price for attached potentiometer EUR	
Type: FST / FSTS Circuit diagram: 18P / 18PE Potentiometer: R... / PW0045–...	FST FSTS	18P	18PE	R1K R5K R10K	PW0045–1K PW0045–5K PW0045–10K

Circuit diagram

18P:

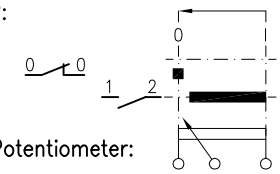

Potentiometer:

18PE:

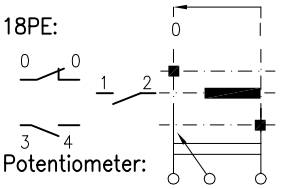

Potentiometer:

Potentiometer: R...: cermet, 2 Watt, max. 24 V=
PW0045..: wire wound, 1.5 Watt, max. 24 V=

FPS
FPSS | IP42 | 250 V~ 16 A | 30 V= 1 A



Photo:
FPS,
FPW

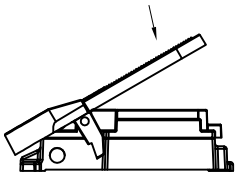

FPW
FPWS | IP42 | R | 250 V~ 5 A | 30 V= 3 A



Photo:
FPSS,
FPWS

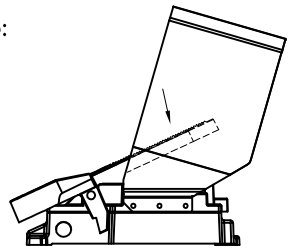

Ordering example	Basic price EUR	Additional price for circuit diagram EUR		Additional price for attached potentiometer EUR
Type: FPS / FPSS Circuit diagram: F...	FPS FPSS	F30	F40	–
Type: FPW / FPWS Circuit diagram: A / E / AE Potentiometer: PW70d–...	FPW FPWS	A E	AE	PW70d–1K PW70d–5K PW70d–10K PW70d–100K

Circuit diagram

F30:

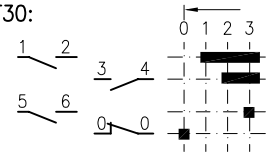

F40:

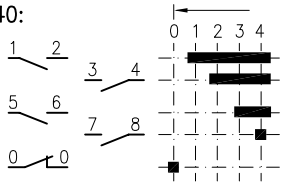

A:

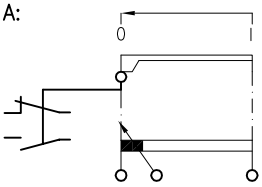

E:

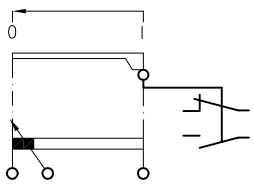

Spohn + Burkhardt
Elektrotechnische Fabrik Blaubeuren

Mauergasse 5
89143 BLAUBEUREN
GERMANY

Tel. +49 7344 171-0 info@spobu.de
Fax +49 7344 171-99 www.spobu.de

Foot rocker FW

Degree of protection IP42 Electrical data: 250 VAC 5 A
30 VDC 3 A



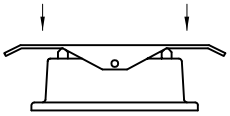

EUR

FW 1
1 step

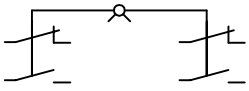

FW 2
2 steps

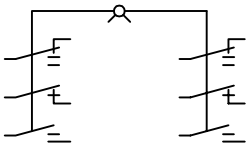

Foot rocker FWO

Degree of protection IP54 Electrical data: 250 VAC 10 A
30 VDC 2 A



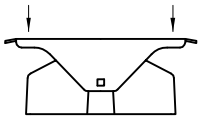

EUR

FWO 10

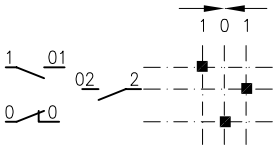

FWO 9P1

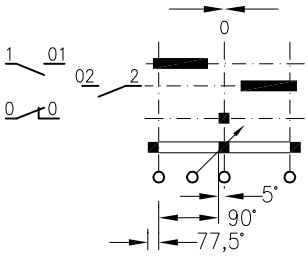

Potentiometer, wire wound, 2 W
PW0045 5–0–5 KΩ – SM 7206–24
on request other ohmic values
potentiometer see sheet 14/1B

Foot rocker FWU

Degree of protection IP42 Electrical data: see sheet 1/1 by type VNS0

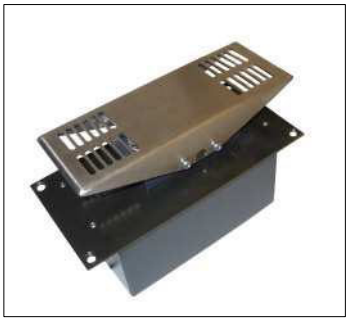

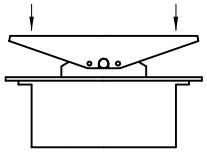

EUR

FWU 30

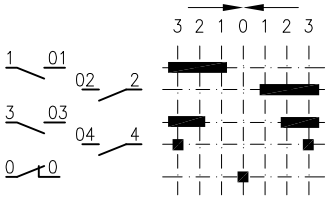

FWU 40

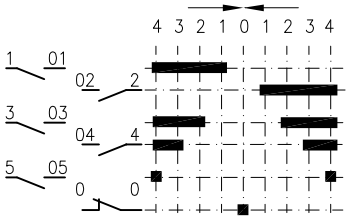

FWU 10P

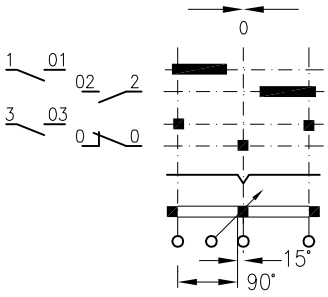

Potentiometer, wire wound, 3 W
PW55 5–0–5 KΩ – SM 7206–05
on request other ohmic values

Spohn + Burkhardt
Elektrotechnische Fabrik Blaubeuren

Mauergasse 5
89143 BLAUBEUREN
GERMANY

Tel. +49 7344 171-0 info@spobu.de
Fax +49 7344 171-99 www.spobu.de

Devices for inland water and sea





Applications

- devices for ships
  e.g. on upper deck for operating the winch
- design for rough conditions: rain, snow...

- surveillance and control devices for outdoor conditions

Classification

- German Lloyd

Common features

- protection IP56 (DIN EN 60529)
- all non-coated parts made of stainless steel or electrogalvanized
- closed compact design

Technical data of controller

- rating insulation voltage Ui 400 V
- conventional thermal current Ith 16 A
- rating operational voltage – rating operational current
  - AC12: Ue = 230 V-50/60 Hz – Ie = 16 A
  - AC15: Ue = 230 V-50/60 Hz – Ie = 6 A
  - DC12: Ue = 24 VDC – Ie = 1,7 A
  - DC13: Ue = 24 VDC – Ie = 1,1 A
- mechanical life 10 mio. cycles
- surrounding temperature –40...+60 °C
- Regulations
  - IEC60947-1, DIN EN 60947-1, VDE 0660 part 100
  - IEC60947-5-1, DIN EN 60947-5-1, VDE 0660 part 200

Types

on deck controller Od2
- case made of sea water resistant aluminium
- available with flat cover or with upper part of instruments
- robust lever on left and right side of case
- controller with max. 4-0-4 steps
- attachment of potentiometer or encoder possible
- grey powder coat

on deck controller Od22
- case made of sea water resistant aluminium
- available with flat cover or with upper part of instruments
- robust lever on left and right side of case
- controller with max. 4-0-4 steps
- attachment of potentiometer or encoder possible
- grey powder coat

on deck controller OdS
- case made of coated sheet metal or stainless steel
- dimensions of case according to client's requirement
- installation of NSO-SFA controllers

Options

- installation of additional control devices:
  emergency stop, lamps, other instruments
- client-specific design
- special painting (e.g. Munsell...)
- wiring on terminals
- pillar with circle or rectangular flanche
- controller with mechanical interlock
- electrical standby heating
- EExd-type

- further information see list 7 sheet 25/1,
  dimension sheets see M25/1A + M25/1B

Spohn+Burkhardt
Elektrotechnische Fabrik Blaubeuren

Mauergasse 5
89143 BLAUBEUREN
GERMANY

Tel. +49 7344 171-0 info@spobu.de
Fax +49 7344 171-99 www.spobu.de

On deck controller Od2, Od22, OdS, IP56

Dimensions see sheet M 25/1A + M 25/1B

List 7 / 2014
25/1

Od2



Od22



On deck operator consoles OdS





Approbations
- Germanischer Lloyd

Basic version with controller without pillar RAL 7032 powder coated		Flat cover cable entry on the side	Flat cover cable entry base mounting	EUR	With measure instruments cable entry ont the side	With measure instruments cable entry base mounting	EUR
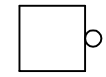	Without spring return	Od2	Od2B		Od2J	Od2BJ	
	With spring return	Od2R	Od2RB		Od2RJ	Od2RBJ	
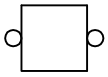	Without spring return		Od22			Od22J	
	With spring return		Od22R			Od22RJ	

EUR + each double contact

EUR + each double contact

Version **OdS** in steel or stainless steel with collapsible protective cover, pillar or enclosure complete with controllers and control devices available.

On request:
- completely wired
- dimension of enclosure according to client's requirement, on Od-version.

Additionals:	EUR
Emergency off button	
Lamps up to 130 V	
Lamps with transformer	
Heating type **Z** (please give voltage in clear text)	
Switch **NS00-FOD**	
+ each double contact	
Pillar	
Mechanical interlock at controller Od2...	
Special painting	on request

	EUR
Potentiometer according as SM 7206-31	
PD550 1K-0-1K S495	
PD550 5K-0-5K S495	
PD550 10K-0-10K S495	
Additional price for coupling	

Ordering example:

Od22 RJ 3D0.3D0

Top part with two instruments
Cable entry on the side
Circuit see sheet S 40/1

Spohn+Burkhardt
Elektrotechnische Fabrik Blaubeuren

Mauergasse 5
89143 BLAUBEUREN
GERMANY

Tel. +49 7344 171-0 info@spobu.de
Fax +49 7344 171-99 www.spobu.de

01.01.2014

Spohn+Burkhardt
Elektrotechnische Fabrik Blaubeuren

List 7 / 2014
Table of contents

		Description see	Dimensions see
Technical data		1/1	
In handle		2/1...	
Control devices	Control devices ø22,5 mm	2/2...	
Symbols	Symbols	2/3	
Handles	UG..., G..., B...	3/1...	M 3/3...
Controllers	SM0, GM0, M0	4/0...	M 4/1
	ST0	5/0 , 5/2...	M 5/2
	ST1	5/0 , 5/4	M 5/8
	ST2	5/5	M 5/5
	ST3	5/6	M 5/6
	VCS0	7/1...	M 7/4...
	CS1	7/5...	M 7/5...
	NS3	8/1...	M 8/2
	VNS0	9/0 , 9/2...	M 9/2...
	NNS0	9/0 , 9/2N...	M 9/2N...
	VNS2, VNSB2	10/1...	M 10/2...
Drive brake controller	FBS	11/1	M 11/1...
Synchrotransmitter	DG0, DDG0	13/1...	
Potentiometer, amplifier	PD550, PW70, B..., G..., PA...	14/1...	
Encoders	OER, OGF, OGP-DP	15/11...	
Electronic interfaces	CAN, Profibus, ESS...	16/1...	
Portable control stations	T-011, T-022, T-056	20/2...	
Pendants	H-011, HD, HV, HBV	21/2...	M 21/1...
Operator control units	SV0, FSA, FSR, SV1C, FSMMD	22/1...	M 22/1...
Pedals, foot switches	SF, FST, FPS, FWO, FWU	24/1...	M 24/1...
On deck controller	Od2, Od22, OdS	25/0...	M 25/1...
Standard circuits controllers		S40/1...	
Forms of special circuits			
Dimensions: controllers, operator control units,...			

List prices are in Euro and conditonally, ex works, without packing.
Tax on sales/purchases are not included.

Representations: Germany, worldwide

01.01.2014

Einzel–Meisterschalter Antrieb A

Controller
Drive A

Tag: Day:	Kunde: Customer:
Name: Name:	Zeichnungs–Nr.: Drawing–Nr.:

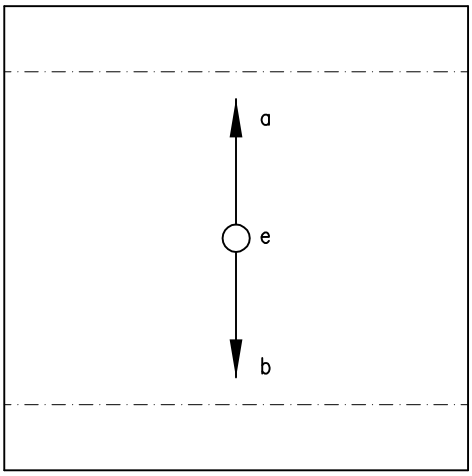

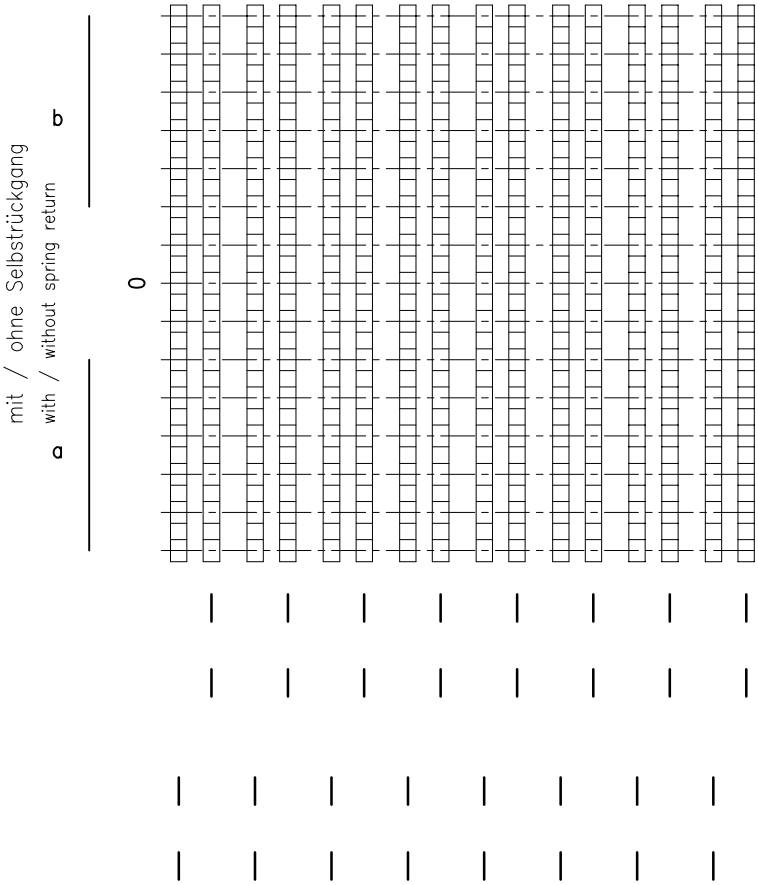

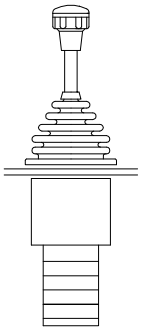

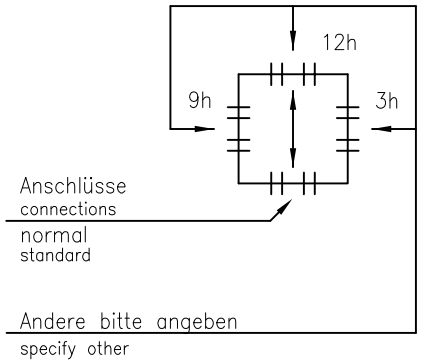

Typ:

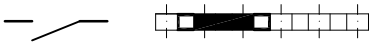

Kontaktüberlappung (Überschneidung)
contact overlapping



Schwarzes Feld = Kontakt geschlossen
black field = contact closed

Spohn + Burkhardt
Elektrotechnische Fabrik Blaubeuren

Mauergasse 5
89143 BLAUBEUREN
GERMANY

Tel. +49 7344 171-0 info@spobu.de
Fax +49 7344 171-99 www.spobu.de

01.01.2014

Verbund–Meisterschalter Antrieb AA — Controller Drive AA	Tag: Day:	Kunde: Customer:
	Name: Name:	Zeichnungs–Nr.: Drawing–Nr.:

mit / ohne Selbstrückgang
with / without spring return

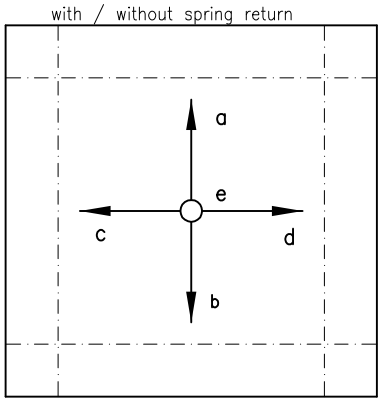

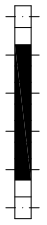

Schwarzes Feld = Kontakt geschlossen
black field = contact closed

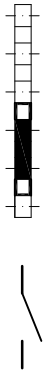

Kontaktüberlappung (Überschneidung)
contact overlapping

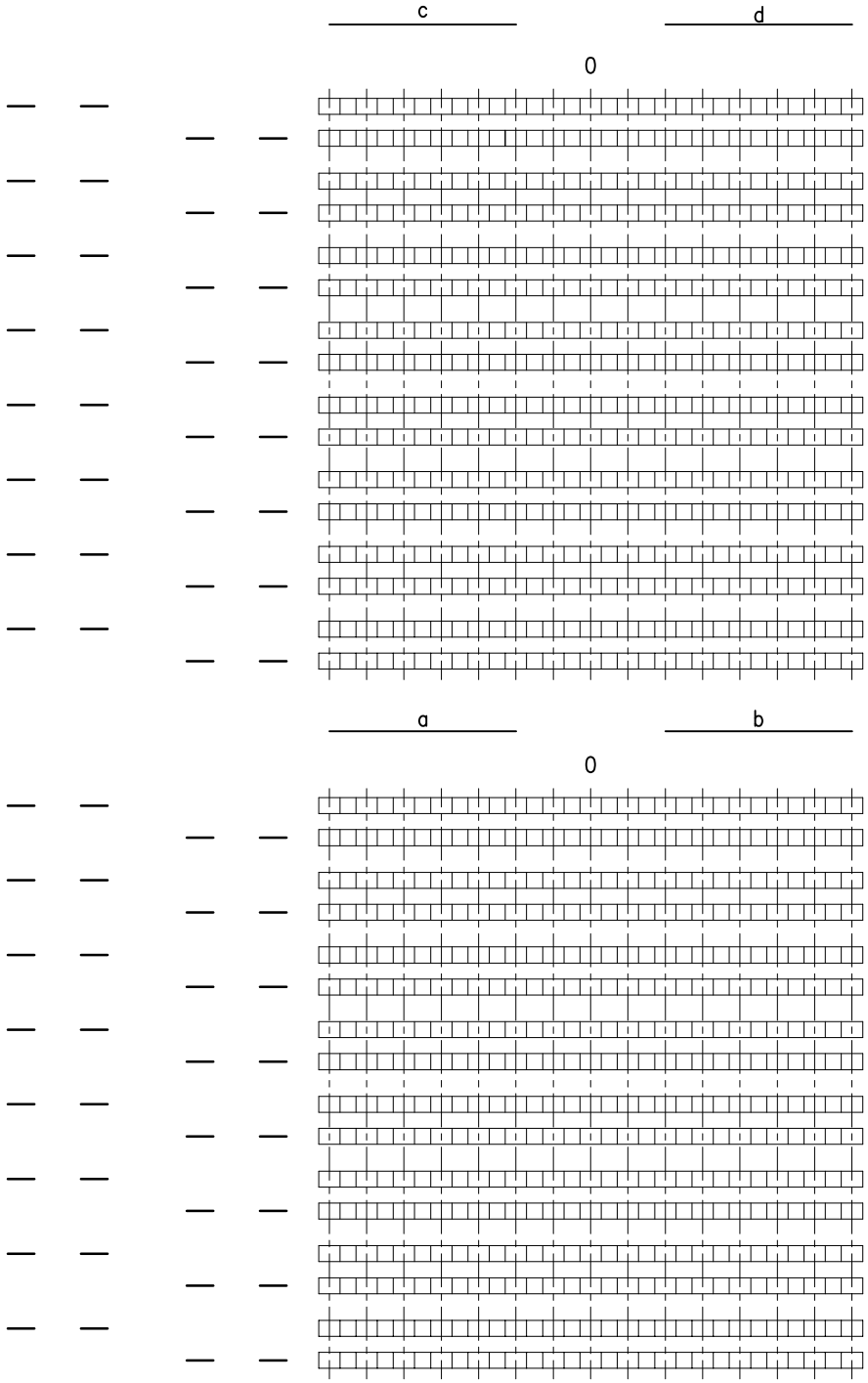

Typ:

Spohn + Burkhardt
Elektrotechnische Fabrik Blaubeuren

Mauergasse 5
89143 BLAUBEUREN
GERMANY

Tel. +49 7344 171-0 info@spobu.de
Fax +49 7344 171-99 www.spobu.de

01.01.2014

Verbund–Meisterschalter Antrieb EA

Controller Drive EA

Tag: Day:	Kunde: Customer:
Name: Name:	Zeichnungs–Nr.: Drawing–Nr.:

mit / ohne Selbstrückgang
with / without spring return

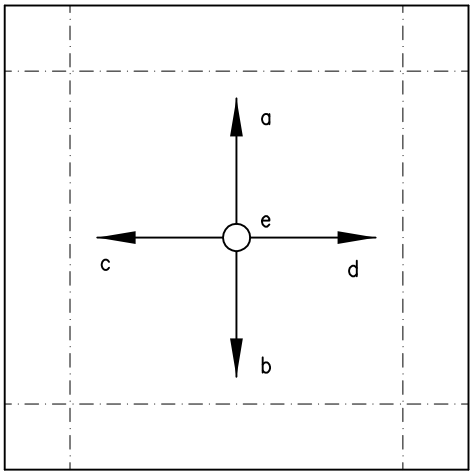

mit / ohne Selbstrückgang
with / without spring return

b

a

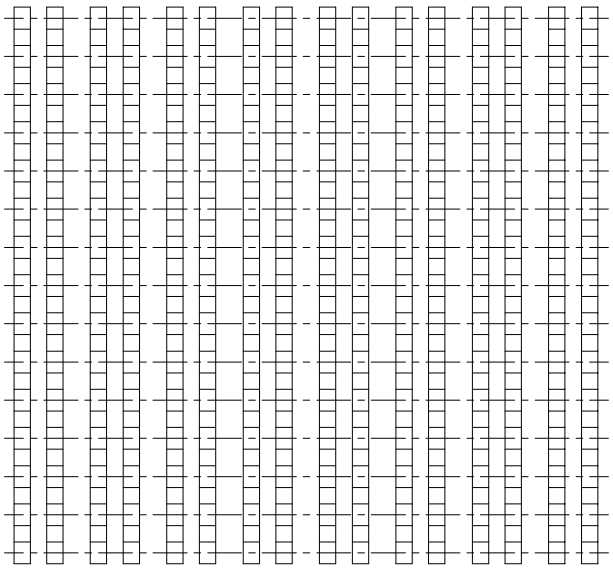

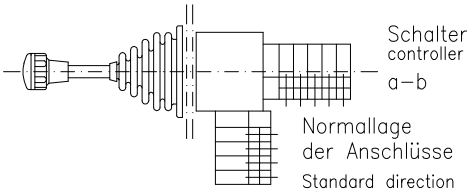

Schalter
controller
a–b

Normallage
der Anschlüsse
Standard direction
of connections

Schalter c–d
controller c–d

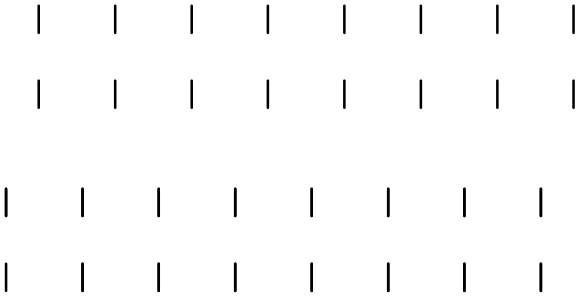

c

d

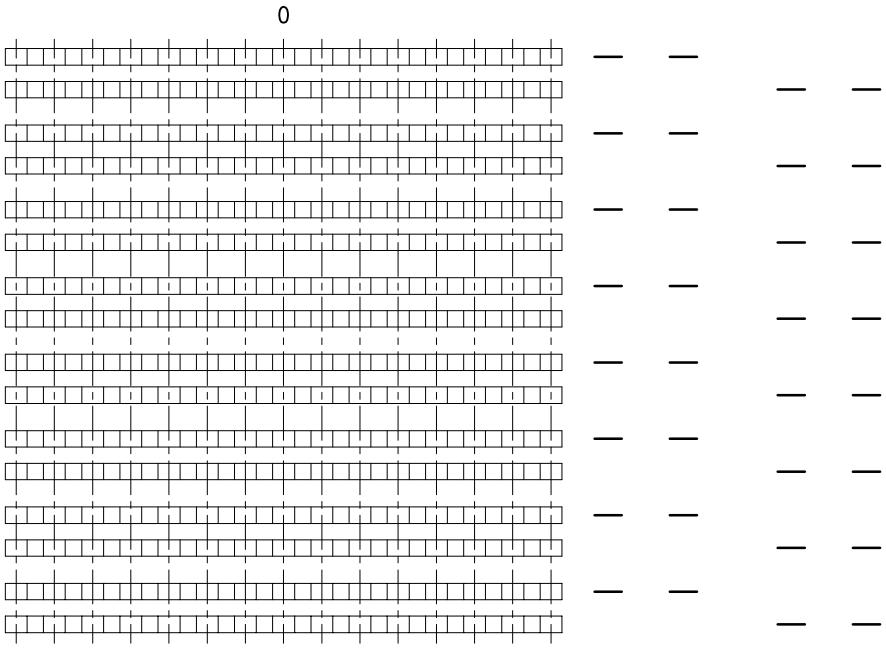

Bei Rosettengravur angeben.
Betätigung mit der
Specify for engraving

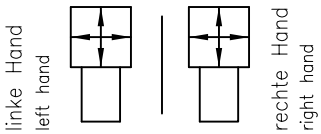

Typ:

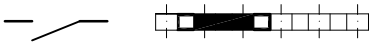

Kontaktüberlappung (Überschneidung)
contact overlapping



Schwarzes Feld = Kontakt geschlossen
black field = contact closed

Spohn + Burkhardt
Elektrotechnische Fabrik Blaubeuren

Mauergasse 5
89143 BLAUBEUREN
GERMANY

Tel. +49 7344 171-0 info@spobu.de
Fax +49 7344 171-99 www.spobu.de

01.01.2014

Einzel–Meisterschalter Antrieb E, Anordnung N — Controller Drive E, Arrangement N	Tag: Day:	Kunde: Customer:
	Name: Name:	Zeichnungs–Nr.: Drawing–Nr.:

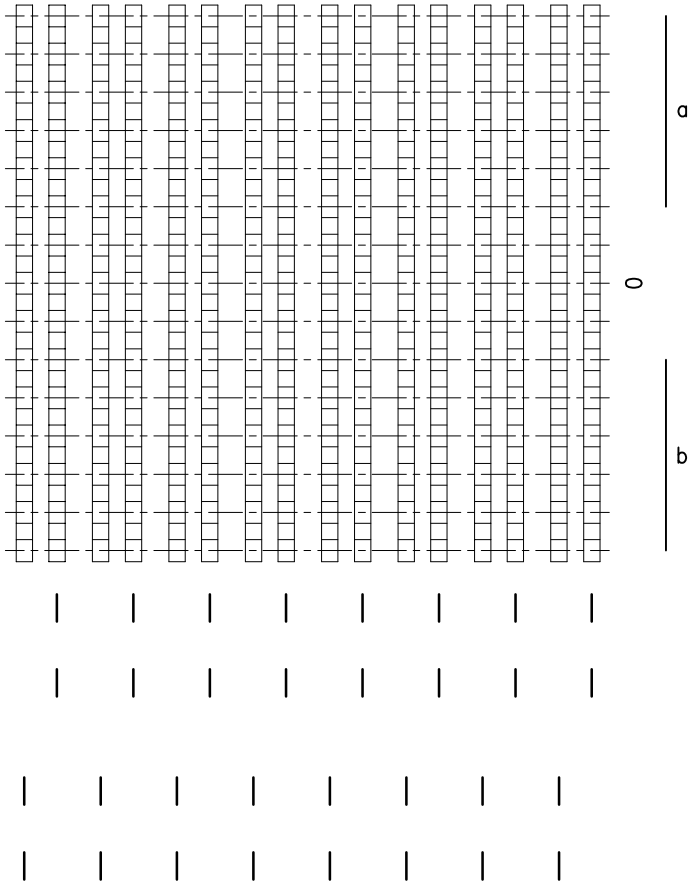

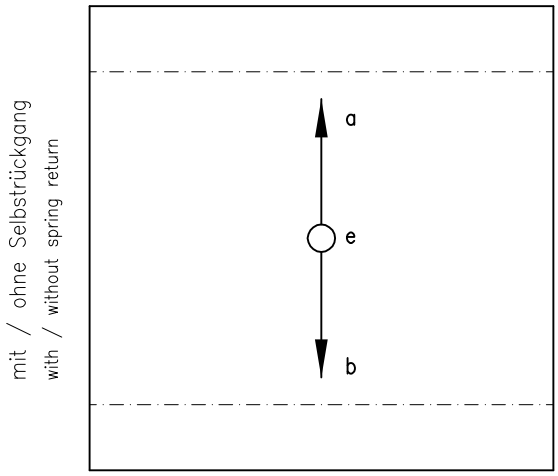

Typ:



Kontaktüberlappung (Überschneidung)
contact overlapping



Schwarzes Feld = Kontakt geschlossen
black field = contact closed

Spohn + Burkhardt
Elektrotechnische Fabrik Blaubeuren

Mauergasse 5
89143 BLAUBEUREN
GERMANY

Tel. +49 7344 171-0 info@spobu.de
Fax +49 7344 171-99 www.spobu.de

01.01.2014

Einzel–Meisterschalter Antrieb E, Anordnung U	Controller Drive E Arrangement U	Tag: Day:	Kunde: Customer:
		Name: Name:	Zeichnungs–Nr.: Drawing–Nr.:

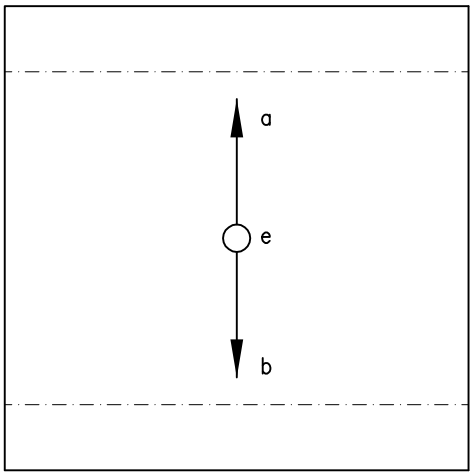

mit / ohne Selbstrückgang
with / without spring return

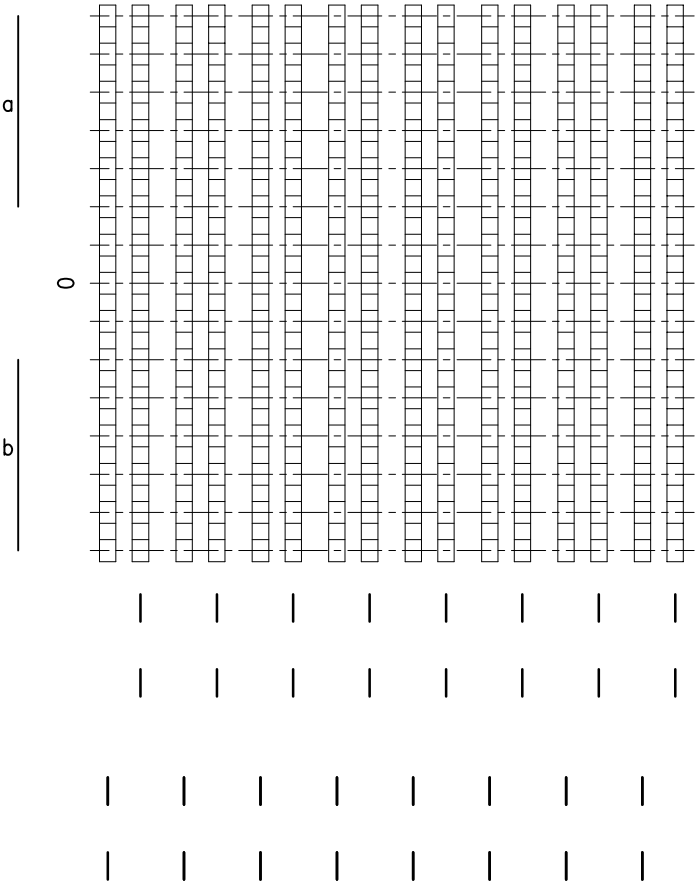

Typ:



Kontaktüberlappung (Überschneidung)
contact overlapping

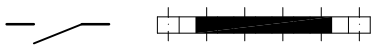

Schwarzes Feld = Kontakt geschlossen
black field = contact closed

Spohn+Burkhardt
Elektrotechnische Fabrik Blaubeuren

Mauergasse 5
89143 BLAUBEUREN
GERMANY

Tel. +49 7344 171-0 info@spobu.de
Fax +49 7344 171-99 www.spobu.de

01.01.2014

Einzel–Meisterschalter Antrieb G	Controller Drive G	Tag: Day:	Kunde: Customer:
		Name: Name:	Zeichnungs–Nr.: Drawing–Nr.:

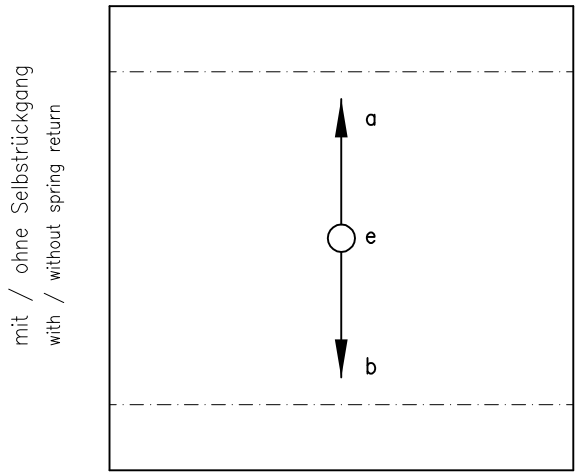

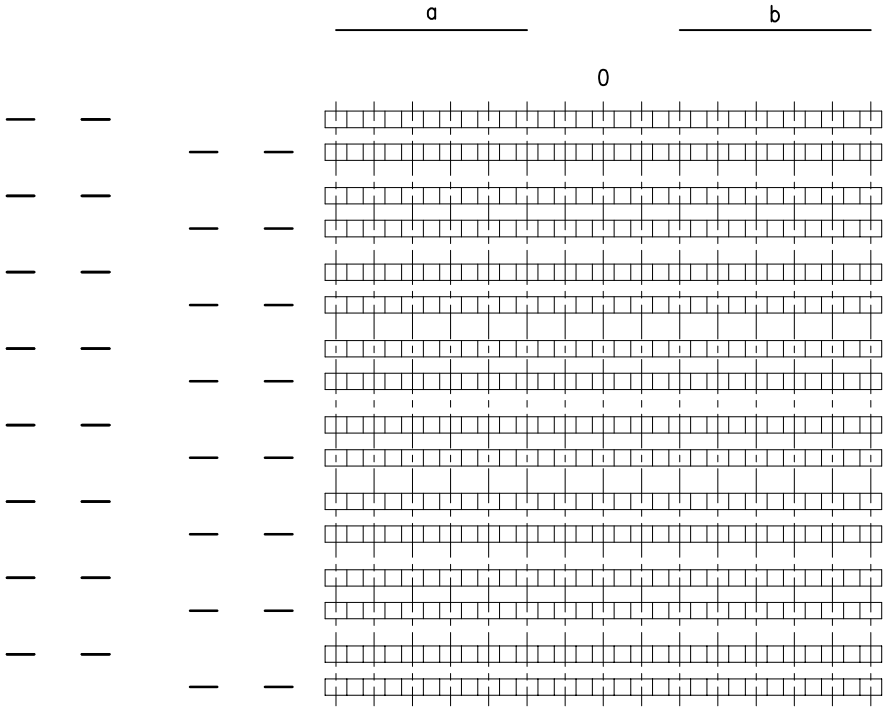

Typ:

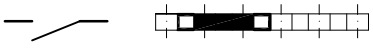

Kontaktüberlappung (Überschneidung)
contact overlapping



Schwarzes Feld = Kontakt geschlossen
black field = contact closed

Spohn+Burkhardt
Elektrotechnische Fabrik Blaubeuren
Mauergasse 5
89143 BLAUBEUREN
GERMANY
Tel. +49 7344 171-0 info@spobu.de
Fax +49 7344 171-99 www.spobu.de

01.01.2014

Verbund–Meisterschalter Antrieb GGEA

Controller Drive GGEA

Tag: Day:	Kunde: Customer:
Name: Name:	Zeichnungs–Nr.: Drawing–Nr.:

mit / ohne Selbstrückgang
with / without spring return

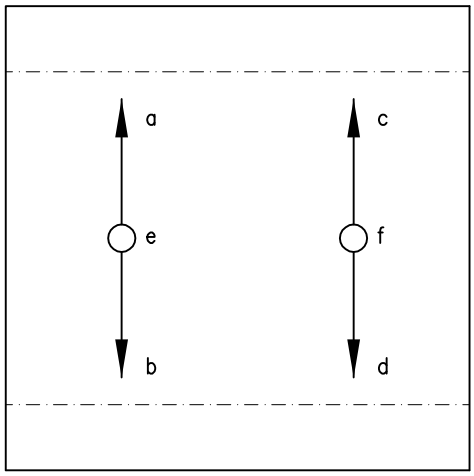

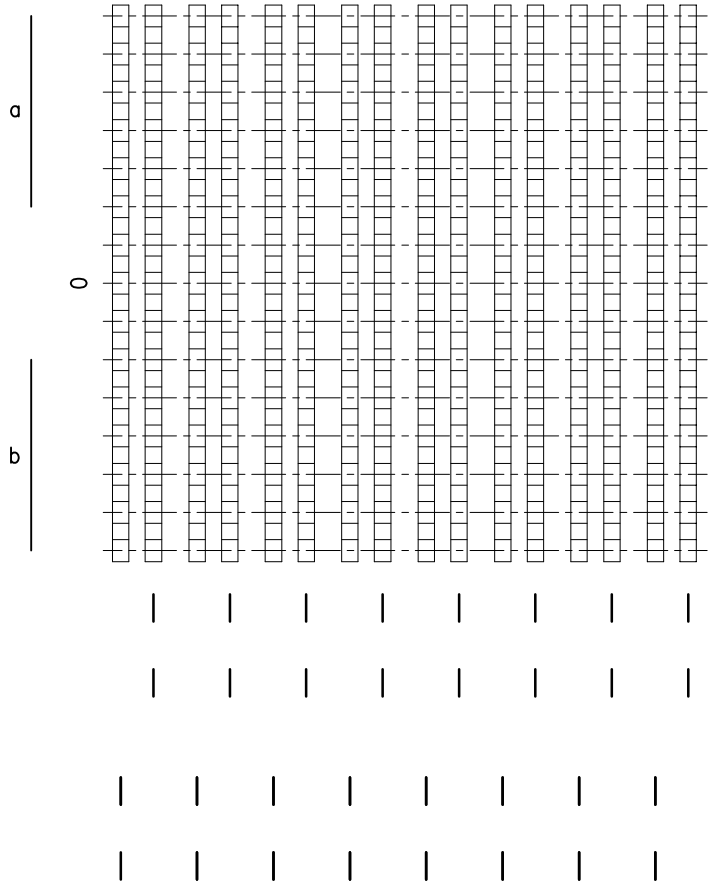

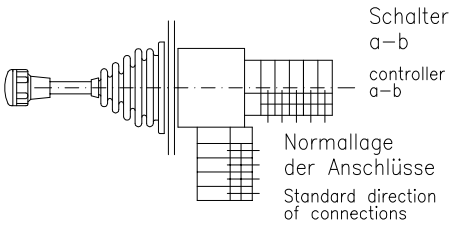

Schalter c–d
controller c–d

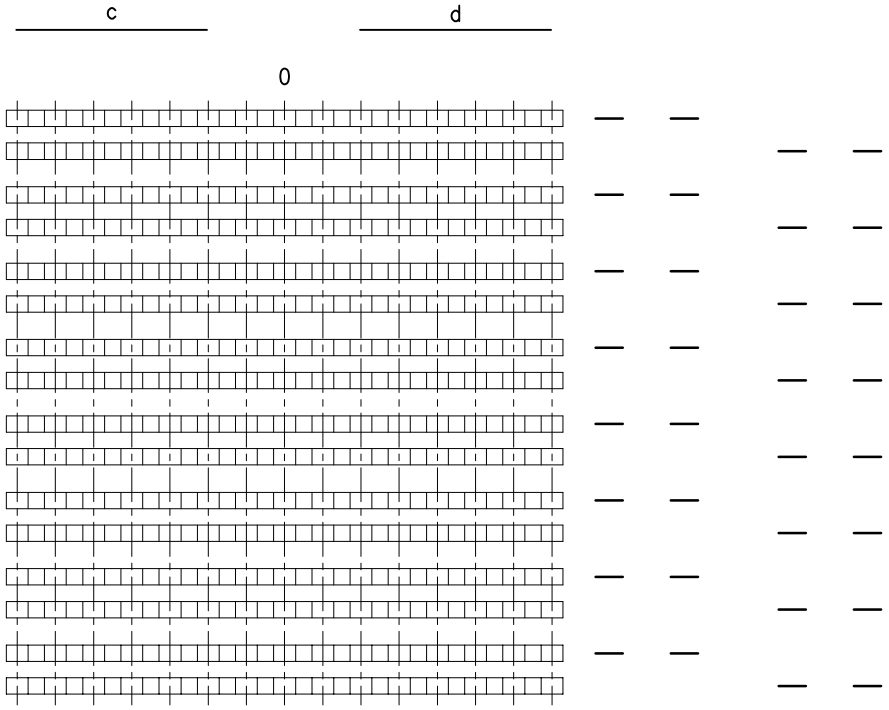

Typ:

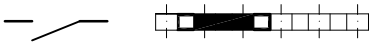

Kontaktüberlappung (Überschneidung)
contact overlapping



Schwarzes Feld = Kontakt geschlossen
black field = contact closed

Spohn + Burkhardt
Elektrotechnische Fabrik Blaubeuren

Mauergasse 5
89143 BLAUBEUREN
GERMANY

Tel. +49 7344 171-0 info@spobu.de
Fax +49 7344 171-99 www.spobu.de

01.01.2014

Verbund–Meisterschalter Antrieb GGH/GGAA*	Controller Drive GGH/GGAA*	Tag: Day:	Kunde: Customer:
		Name: Name:	Zeichnungs–Nr.: Drawing–Nr.:

mit / ohne Selbstrückgang
with / without spring return

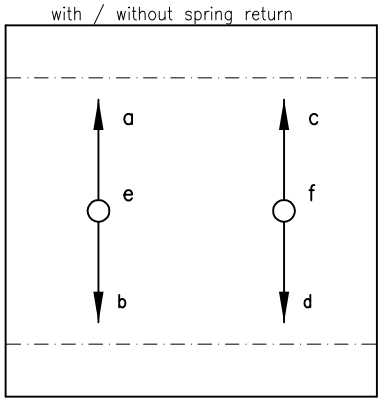

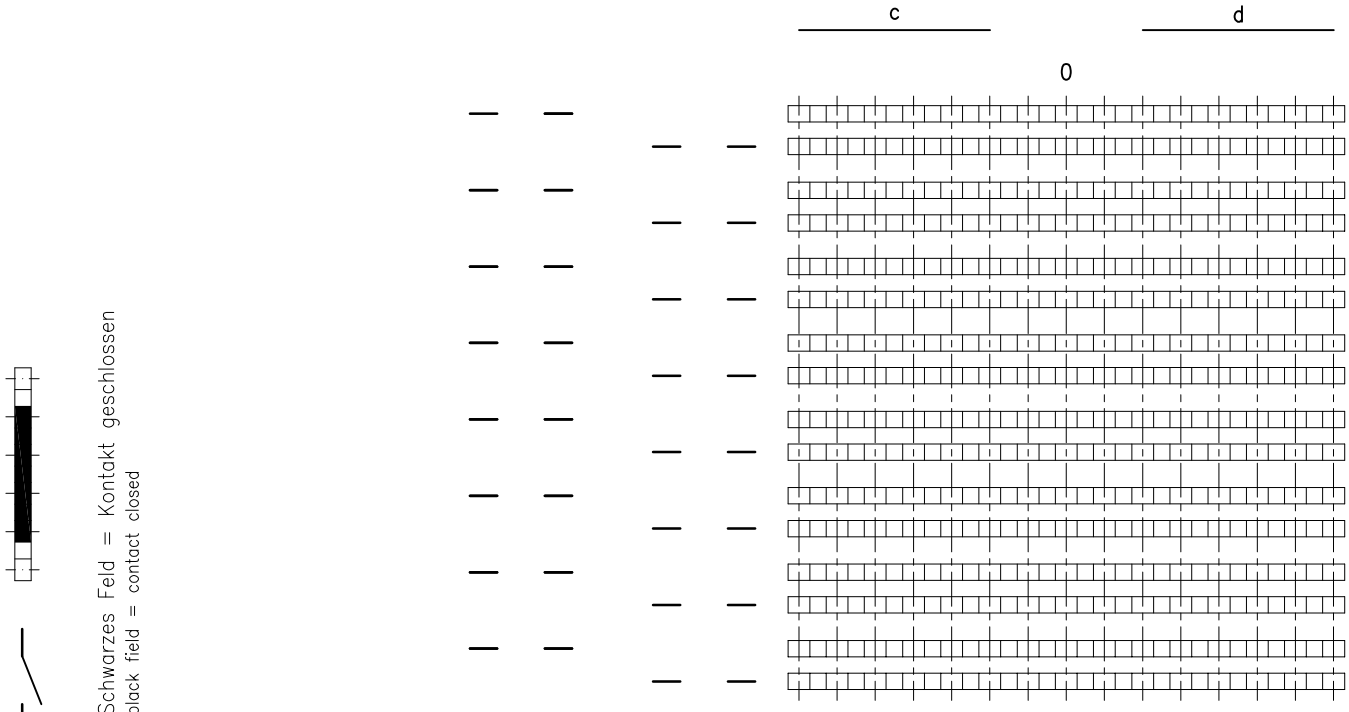

Schwarzes Feld = Kontakt geschlossen
black field = contact closed

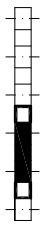

Kontaktüberlappung (Überschneidung)
contact overlapping

Typ:

Spohn+Burkhardt
Elektrotechnische Fabrik Blaubeuren

Mauergasse 5
89143 BLAUBEUREN
GERMANY

Tel. +49 7344 171-0 info@spobu.de
Fax +49 7344 171-99 www.spobu.de

01.01.2014

Verbund–Meisterschalter Antrieb GGNV, Anordnung N

Controller Drive GGNV, Arrangement N

Tag: Day:	Kunde: Customer:
Name: Name:	Zeichnungs–Nr.: Drawing–Nr.:

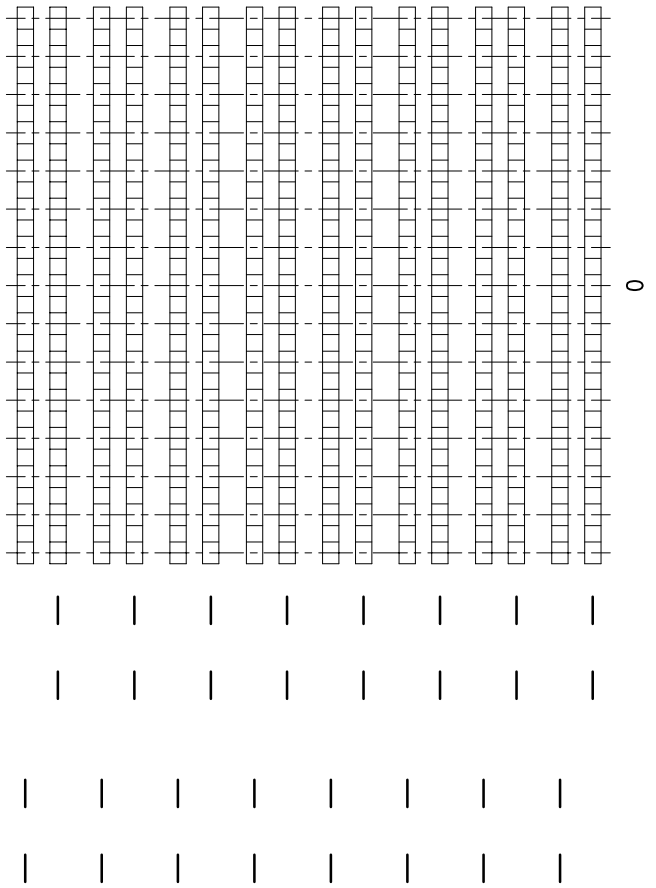

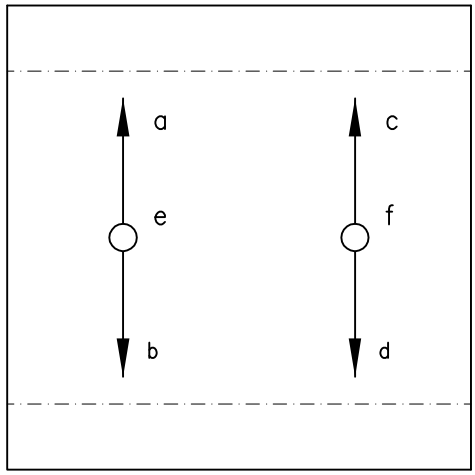

mit / ohne Selbstrückgang
with / without spring return

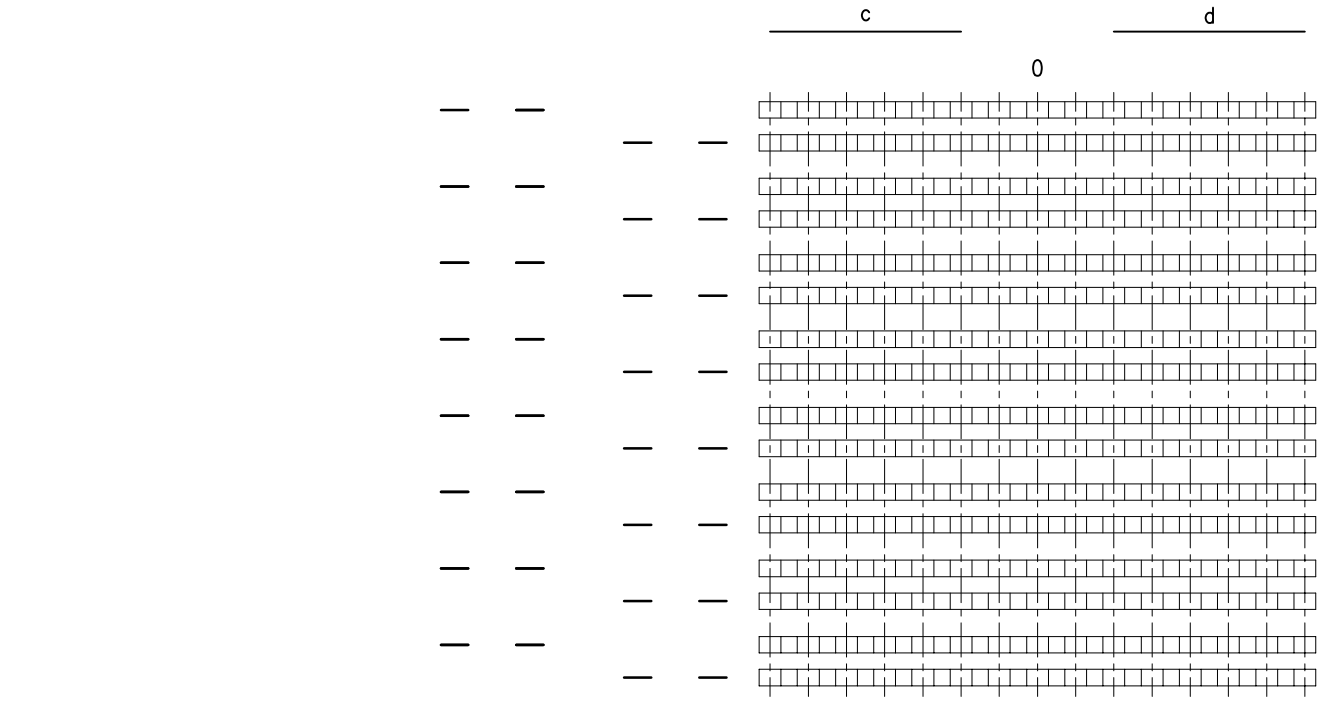

Typ:

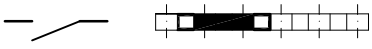

Kontaktüberlappung (Überschneidung)
contact overlapping



Schwarzes Feld = Kontakt geschlossen
black field = contact closed

Spohn + Burkhardt
Elektrotechnische Fabrik Blaubeuren

Mauergasse 5
89143 BLAUBEUREN
GERMANY

Tel. +49 7344 171-0 info@spobu.de
Fax +49 7344 171-99 www.spobu.de

01.01.2014

Verbund–Meisterschalter Antrieb GGUV, Anordnung U — Controller Drive GGUV Arrangement U	Tag: Day:	Kunde: Customer:
	Name: Name:	Zeichnungs–Nr.: Drawing–Nr.:

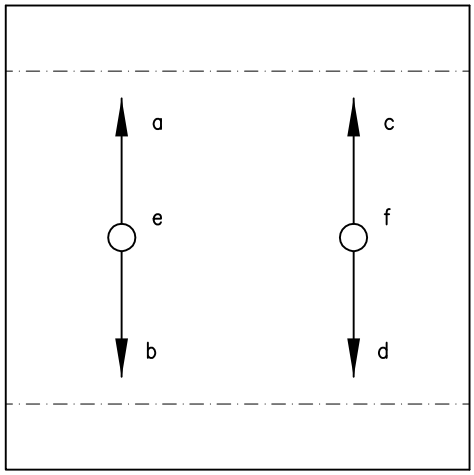

mit / ohne Selbstrückgang
with / without spring return

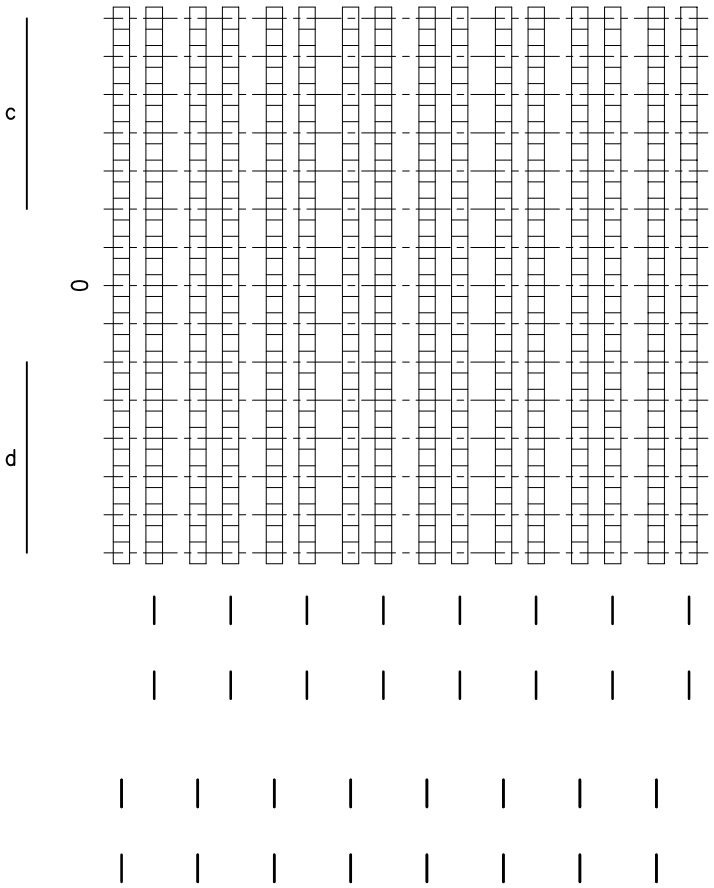

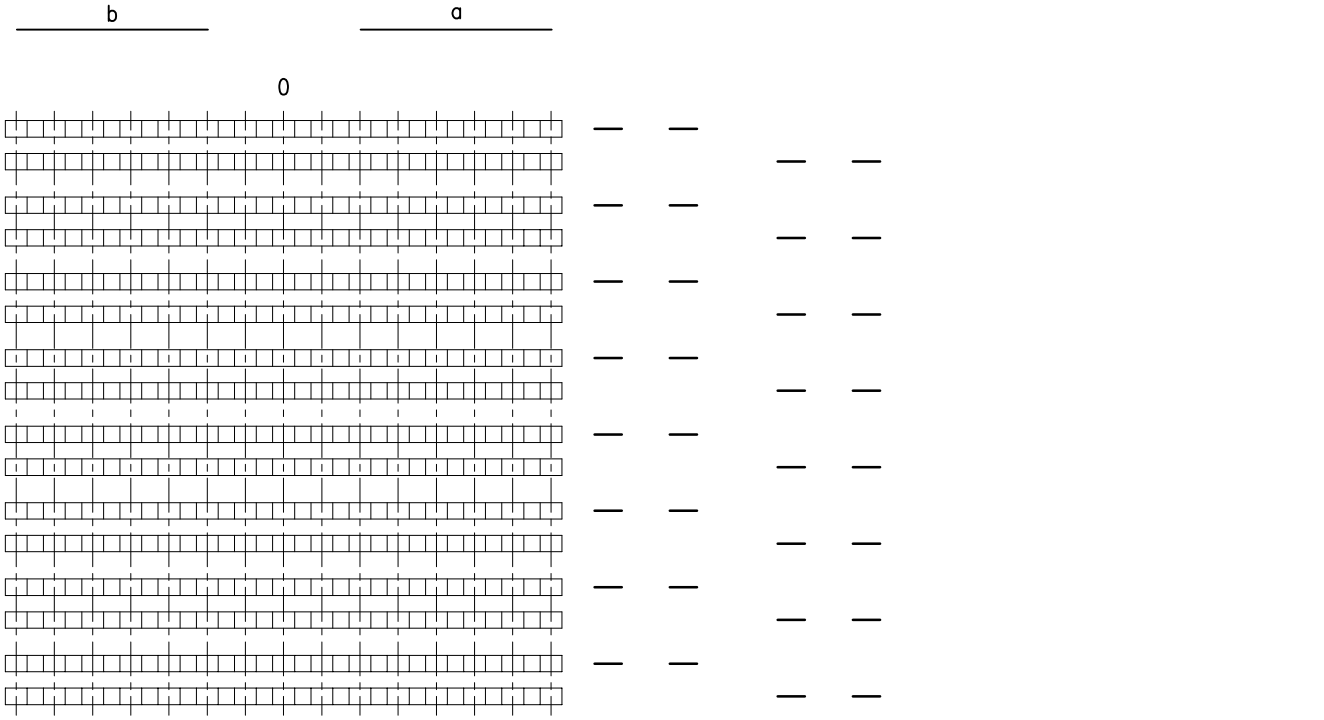

Typ:



Kontaktüberlappung (Überschneidung)
contact overlapping



Schwarzes Feld = Kontakt geschlossen
black field = contact closed

Spohn + Burkhardt
Elektrotechnische Fabrik Blaubeuren

Mauergasse 5
89143 BLAUBEUREN
GERMANY

Tel. +49 7344 171-0 info@spobu.de
Fax +49 7344 171-99 www.spobu.de

01.01.2014

Verbund–Meisterschalter Antrieb H

Controller Drive H

Tag: Day:	Kunde: Customer:
Name: Name:	Zeichnungs–Nr.: Drawing–Nr.:

Bei Rosettengravur angeben.
Specify for engraving

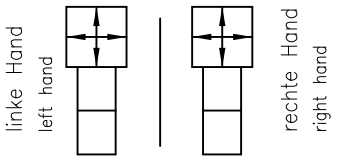

mit / ohne Selbstrückgang
with / without spring return

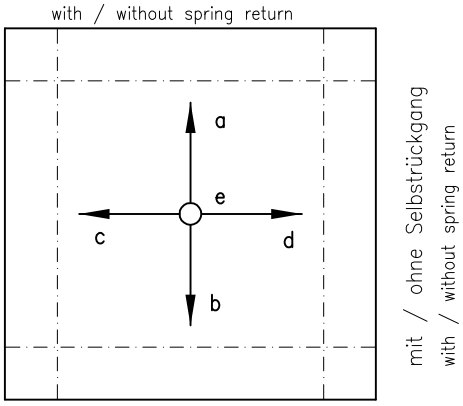

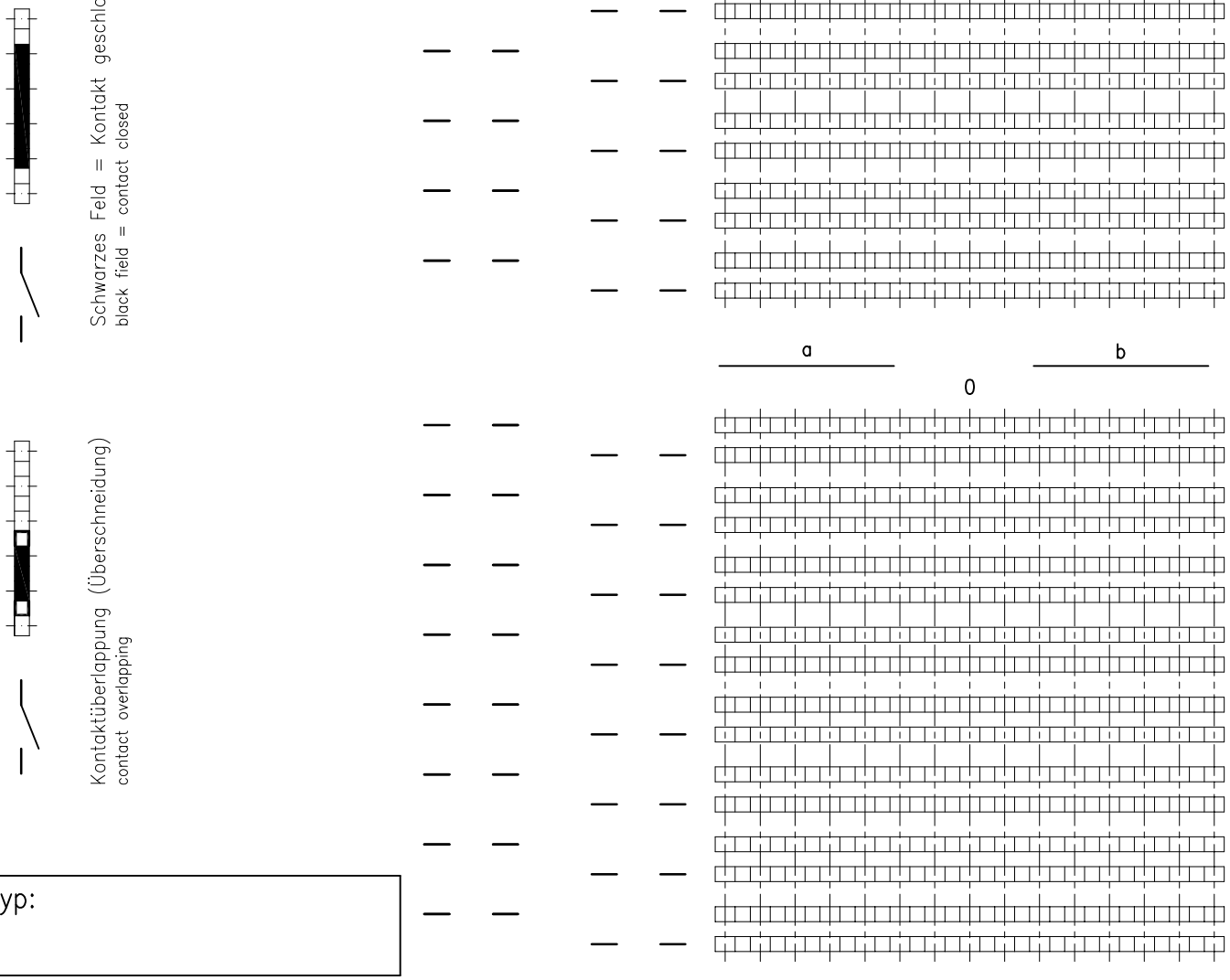

Schwarzes Feld = Kontakt geschlossen
black field = contact closed

Kontaktüberlappung (Überschneidung)
contact overlapping

Typ:

Spohn + Burkhardt
Elektrotechnische Fabrik Blaubeuren

Mauergasse 5
89143 BLAUBEUREN
GERMANY

Tel. +49 7344 171-0 info@spobu.de
Fax +49 7344 171-99 www.spobu.de

01.01.2014

Verbund–Meisterschalter Antrieb M — Controller Drive M	Tag: Day:	Kunde: Customer:
	Name: Name:	Zeichnungs–Nr.: Drawing–Nr.:

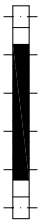

Schwarzes Feld = Kontakt geschlossen
black field = contact closed

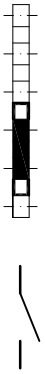

Kontaktüberlappung (Überschneidung)
contact overlapping

Bei Rosettengravur angeben.
Specify for engraving

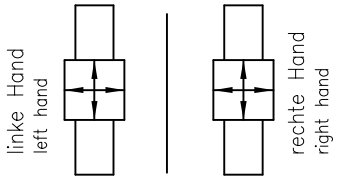

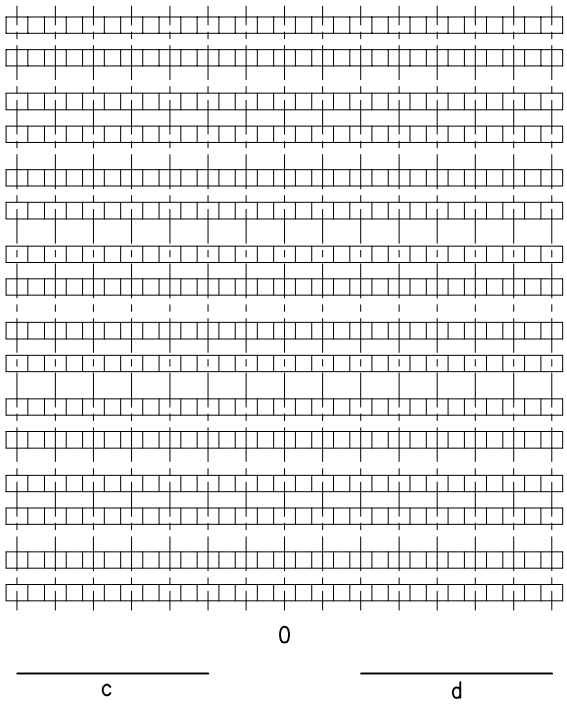

mit / ohne Selbstrückgang
with / without spring return

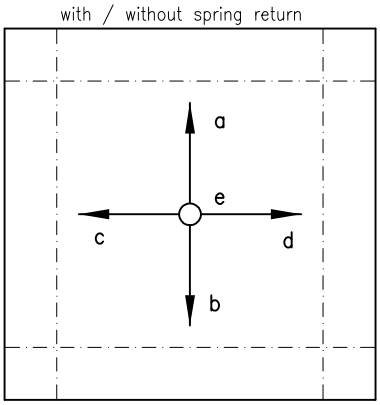

mit / ohne Selbstrückgang
with / without spring return

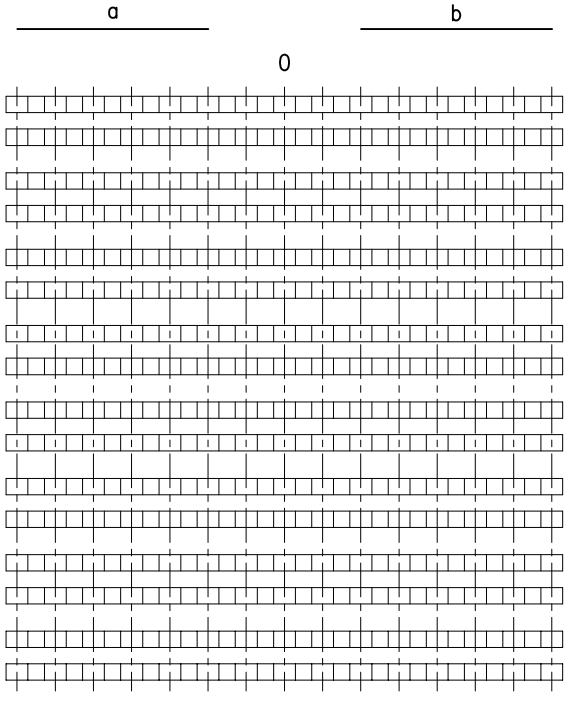

Typ:

Spohn + Burkhardt
Elektrotechnische Fabrik Blaubeuren

Mauergasse 5
89143 BLAUBEUREN
GERMANY

Tel. +49 7344 171-0 info@spobu.de
Fax +49 7344 171-99 www.spobu.de

01.01.2014

Verbund–Meisterschalter Antrieb N–EA

Controller Drive N–EA

Tag: Day:	Kunde: Customer:
Name: Name:	Zeichnungs–Nr.: Drawing–Nr.:

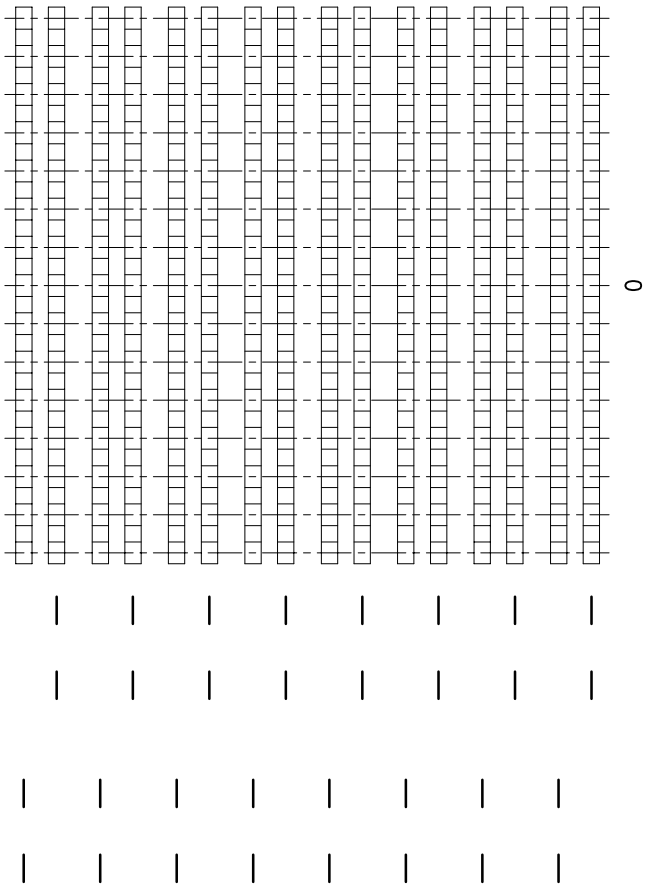

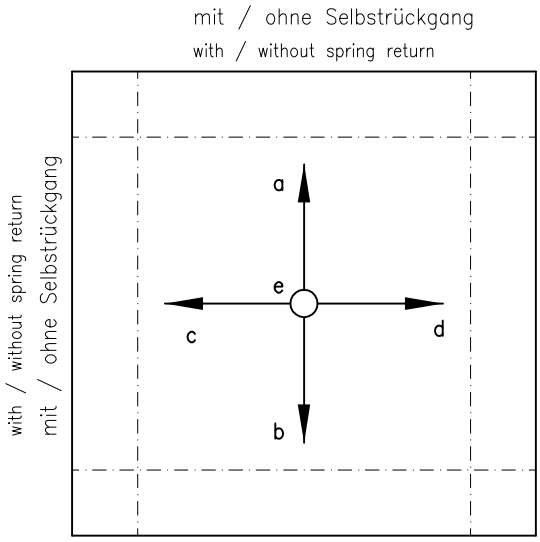

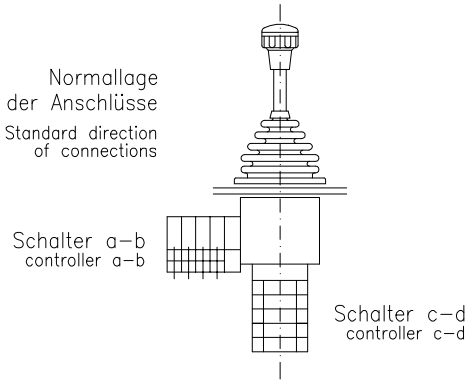

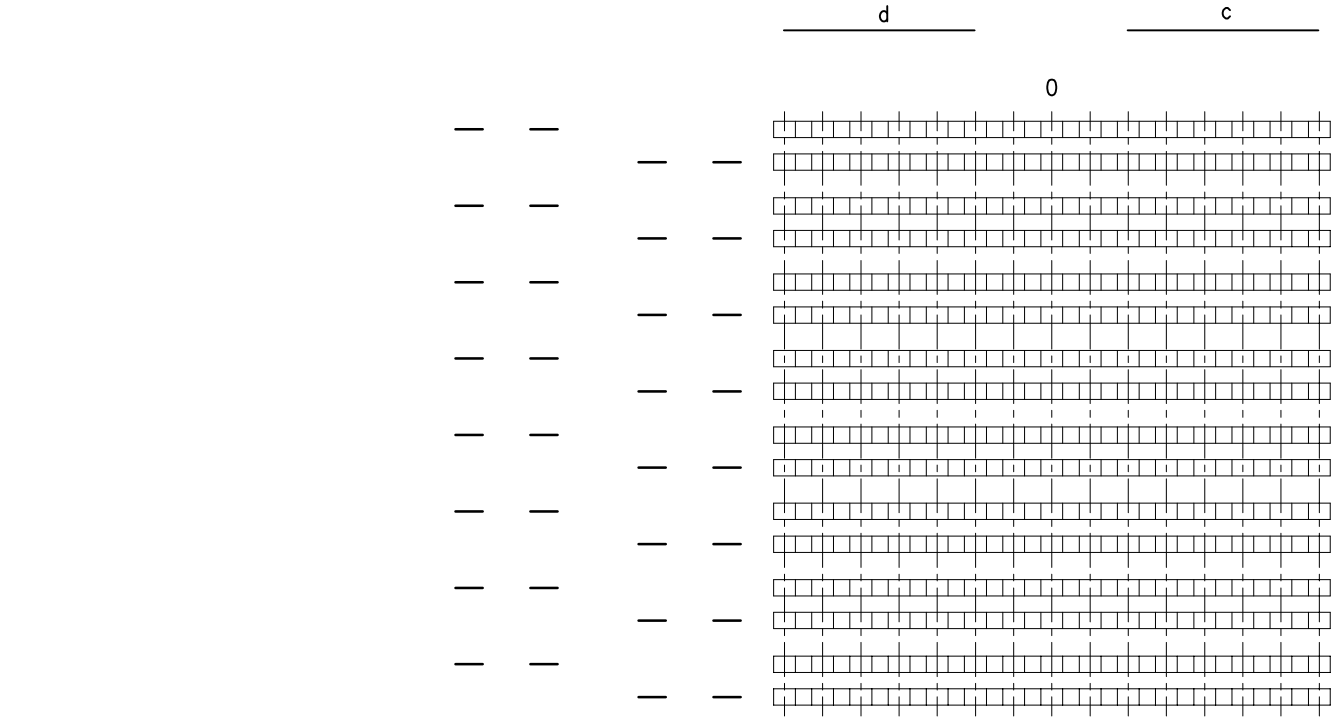

Typ:



Kontaktüberlappung (Überschneidung)
contact overlapping

Schwarzes Feld = Kontakt geschlossen
black field = contact closed

Spohn + Burkhardt
Elektrotechnische Fabrik Blaubeuren

Mauergasse 5
89143 BLAUBEUREN
GERMANY

Tel. +49 7344 171-0 info@spobu.de
Fax +49 7344 171-99 www.spobu.de

01.01.2014

Meisterschalter NS00	Controller NS00	Tag: Day:	Kunde: Customer:
		Name: Name:	Zeichnungs–Nr.: Drawing–Nr.:

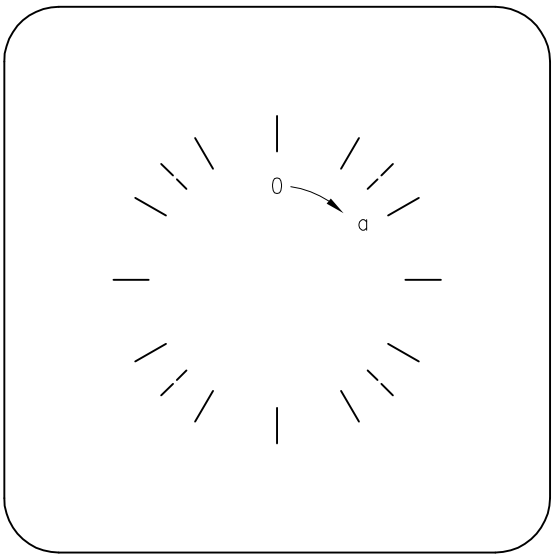

Meisterschalter NS00–nach M 9/8
(Nichtzutreffendes bitte streichen)
Rosette 72x72 mm, 96x96 mm
Knebelgriff NW053
Kugelgriff Edelstahl mit Anzeigespitze
Drehknopf GN 762.2 mit Rosette 72x72 mm
Drehknopf GN 526.1 mit Rosette 96x96 mm
Schaltwinkel 30°, 45°, 60°, 90°
mit/ohne Selbstrückgang

Controller NS00 according M 9/8
(please mark)
escutcheon plate 72x72 mm, 96x96 mm
toggle handle NW053
stainless steel handle
knob GN 762.2 with escutcheon plate 72x72 mm
knob GN 526.1 with escutcheon plate 96x96 mm
switching angles 30°, 45°, 60°, 90°
with / without spring return

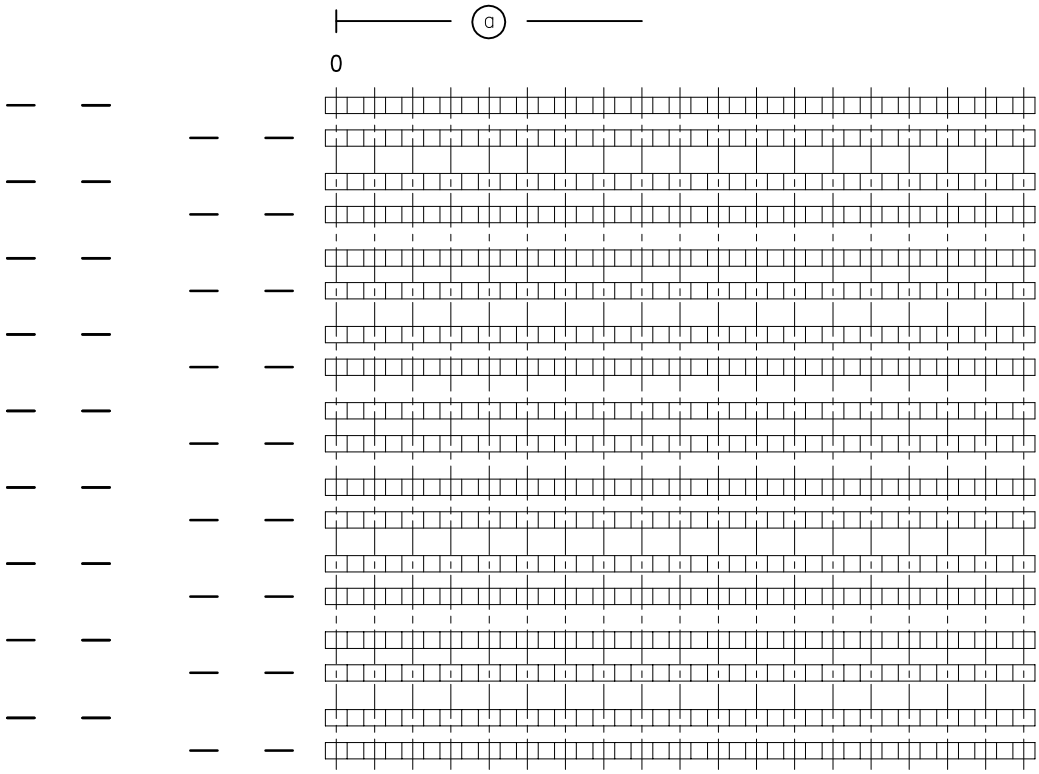

Typ:



Kontaktüberlappung (Überschneidung)
contact overlapping

Schwarzes Feld = Kontakt geschlossen
black field = contact closed

Spohn+Burkhardt
Elektrotechnische Fabrik Blaubeuren

Mauergasse 5
89143 BLAUBEUREN
GERMANY

Tel. +49 7344 171-0 info@spobu.de
Fax +49 7344 171-99 www.spobu.de

01.01.2014

Meisterschalter NS00	Controller NS00	Tag: Day:	Kunde: Customer:
		Name: Name:	Zeichnungs–Nr.: Drawing–Nr.:

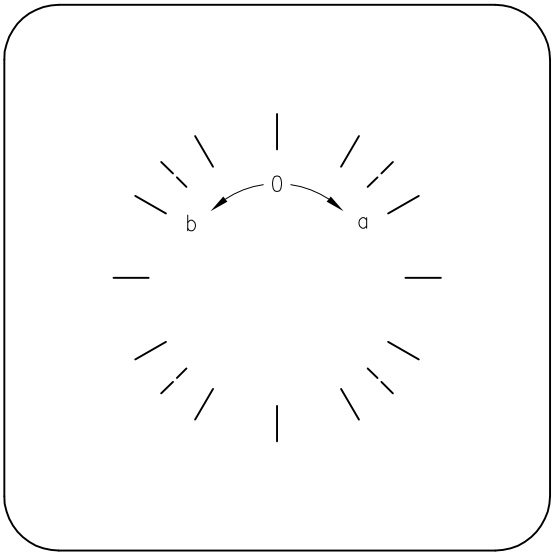

Meisterschalter NS00 nach M 9/8
(Nichtzutreffendes bitte streichen)
Rosette 72x72 mm, 96x96 mm
Knebelgriff NW053
Kugelgriff Edelstahl mit Anzeigespitze
Drehknopf GN 762.2 mit Rosette 72x72 mm
Drehknopf GN 526.1 mit Rosette 96x96 mm
Schaltwinkel 30°, 45°, 60°, 90°
mit/ohne Selbstrückgang

Controller NS00 according M 9/8
(please mark)
escutcheon plate 72x72 mm, 96x96 mm
toggle handle NW053
stainless steel handle
knob GN 762.2 with escutcheon plate 72x72 mm
knob GN 526.1 with escutcheon plate 96x96 mm
switching angles 30°, 45°, 60°, 90°
with/without spring return

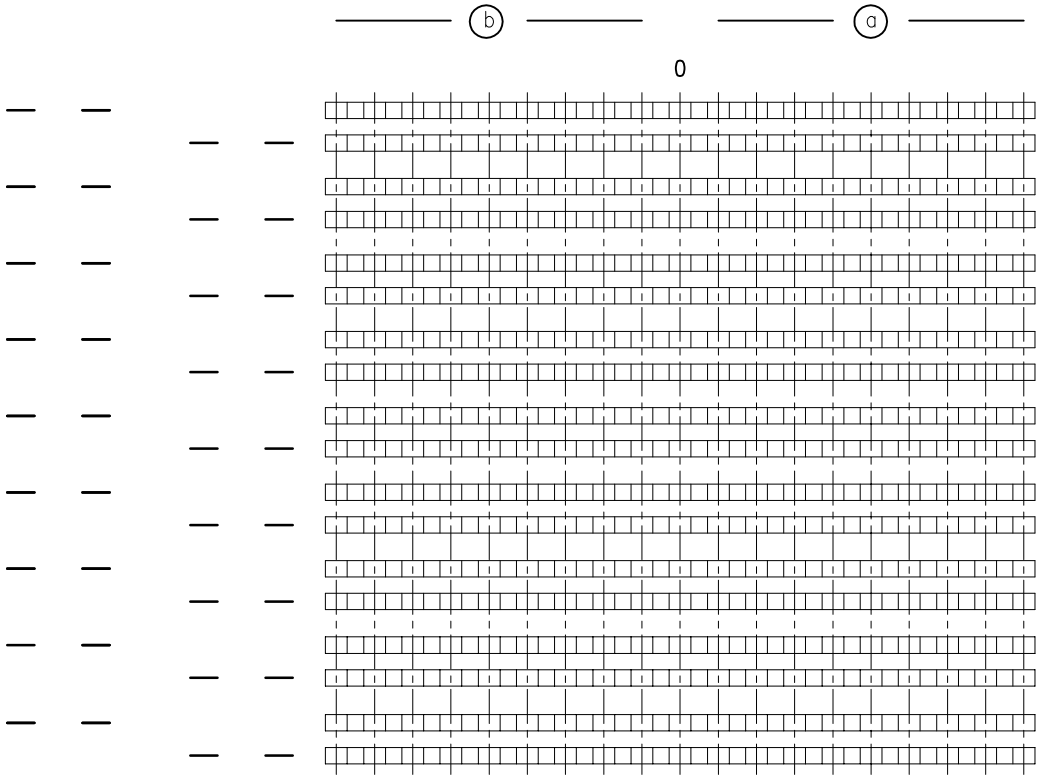

Typ:

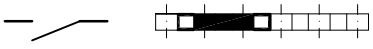

Kontaktüberlappung (Überschneidung)
contact overlapping



Schwarzes Feld = Kontakt geschlossen
black field = contact closed

Spohn+Burkhardt
Elektrotechnische Fabrik Blaubeuren

Mauergasse 5
89143 BLAUBEUREN
GERMANY

Tel. +49 7344 171-0 info@spobu.de
Fax +49 7344 171-99 www.spobu.de

01.01.2014

Meisterschalter SFA
Anordnung N

Controller SFA
Arrangement N

Tag: Day:	Kunde: Customer:
Name: Name:	Zeichnungs–Nr.: Drawing–Nr.:

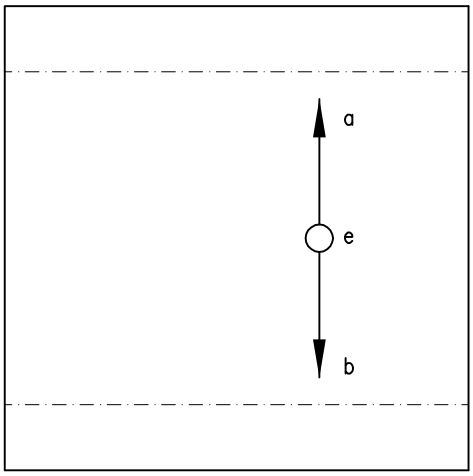

mit / ohne Selbstrückgang
with / without spring return

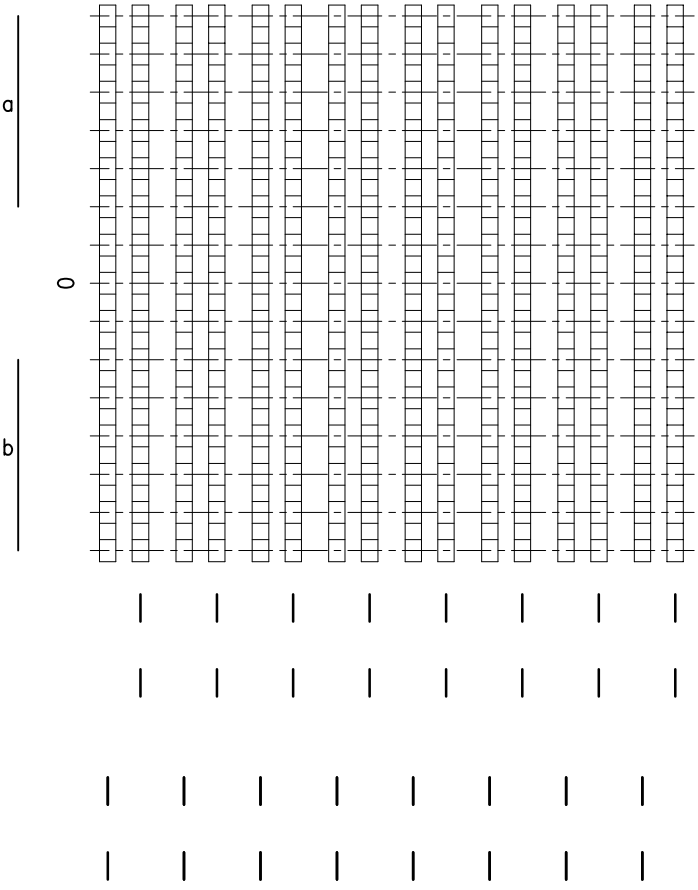

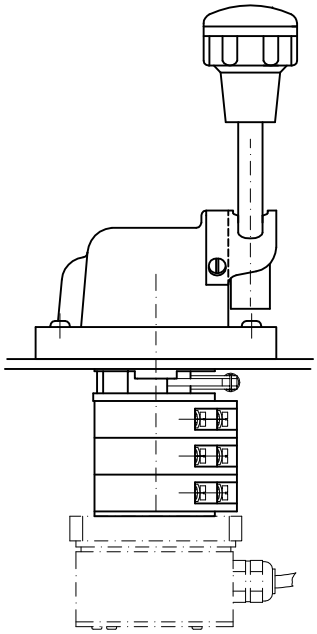

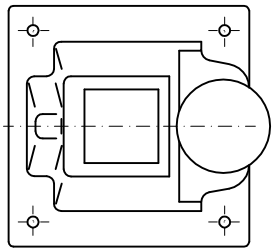

Typ:

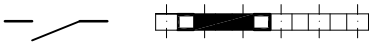

Kontaktüberlappung (Überschneidung)
contact overlapping



Schwarzes Feld = Kontakt geschlossen
black field = contact closed

Spohn+Burkhardt
Elektrotechnische Fabrik Blaubeuren

Mauergasse 5
89143 BLAUBEUREN
GERMANY

Tel. +49 7344 171-0 info@spobu.de
Fax +49 7344 171-99 www.spobu.de

01.01.2014

Meisterschalter SFA Anordnung U	Controller SFA Arrangement U	Tag: Day:	Kunde: Customer:
		Name: Name:	Zeichnungs–Nr.: Drawing–Nr.:

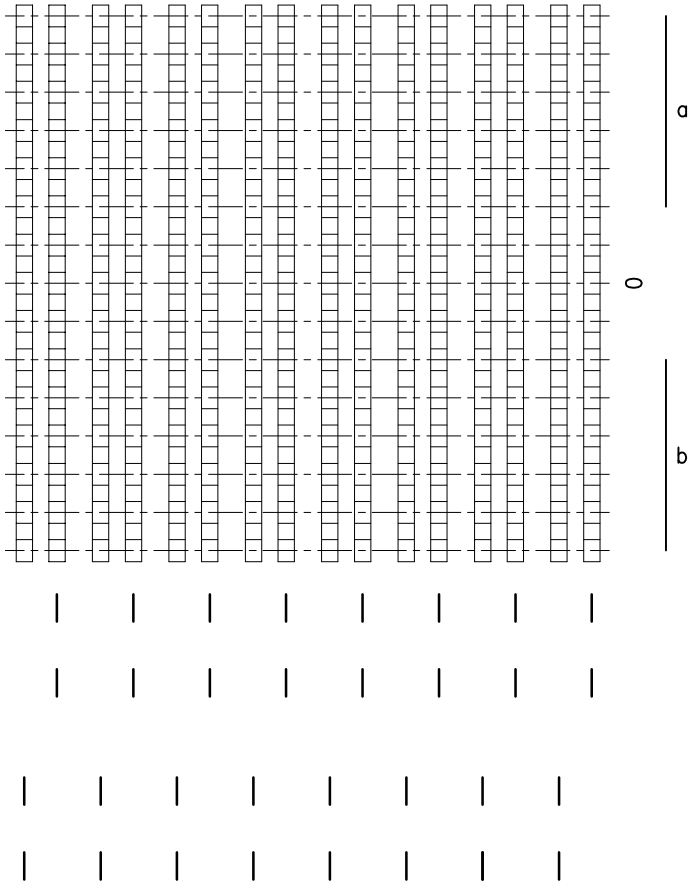

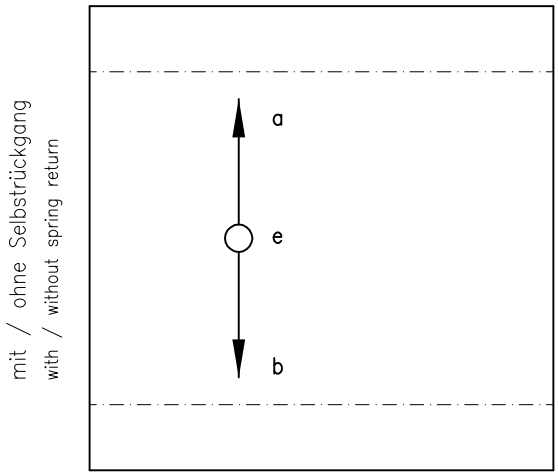

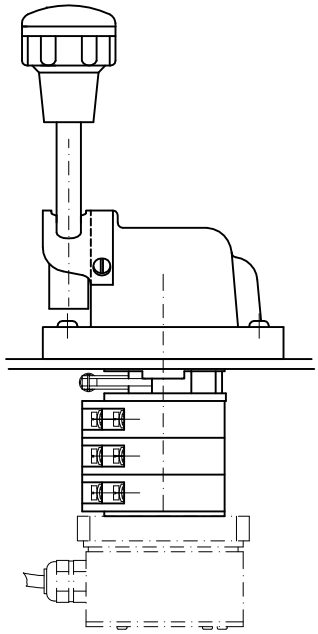

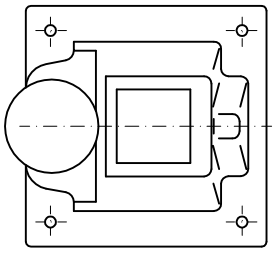

Typ:



Kontaktüberlappung (Überschneidung)
contact overlapping



Schwarzes Feld = Kontakt geschlossen
black field = contact closed

Spohn+Burkhardt
Elektrotechnische Fabrik Blaubeuren

Mauergasse 5
89143 BLAUBEUREN
GERMANY

Tel. +49 7344 171-0 info@spobu.de
Fax +49 7344 171-99 www.spobu.de

01.01.2014

Verbund–Meisterschalter Antrieb U–EA

Controller Drive U–EA

Tag: Day:	Kunde: Customer:
Name: Name:	Zeichnungs–Nr.: Drawing–Nr.:

mit / ohne Selbstrückgang
with / without spring return

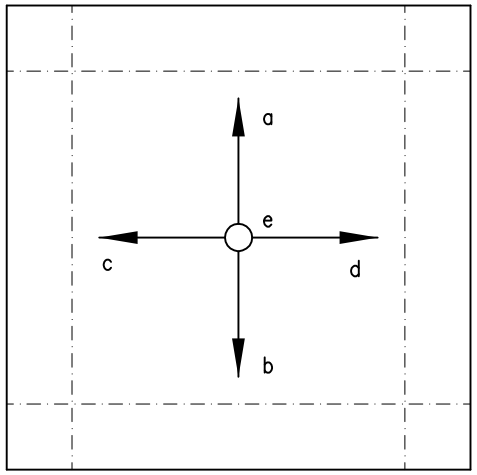

mit / ohne Selbstrückgang
with / without spring return

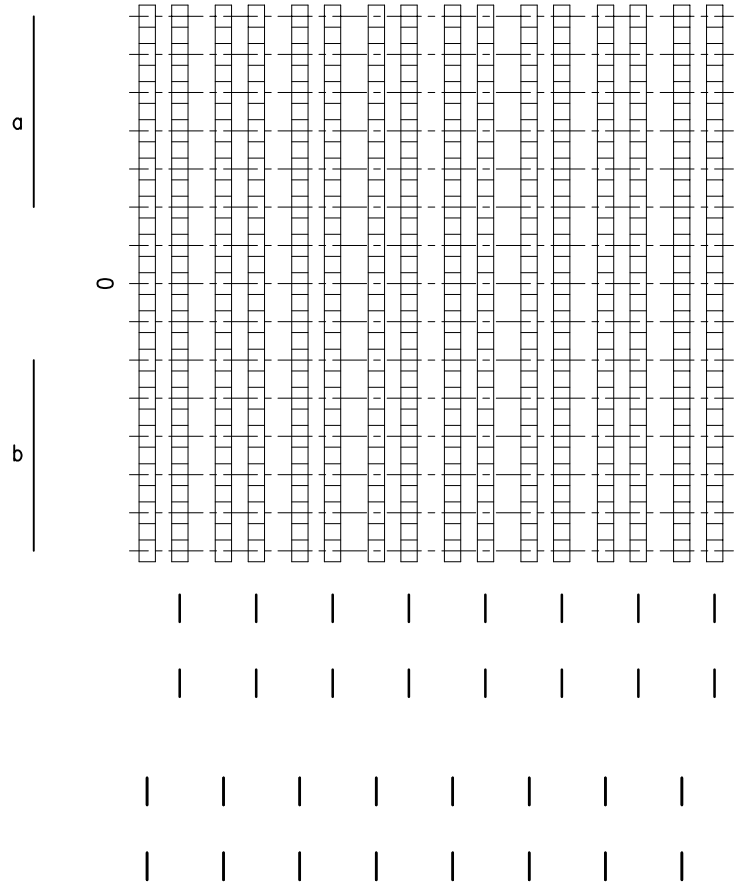

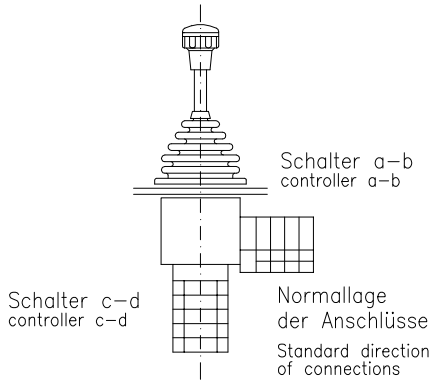

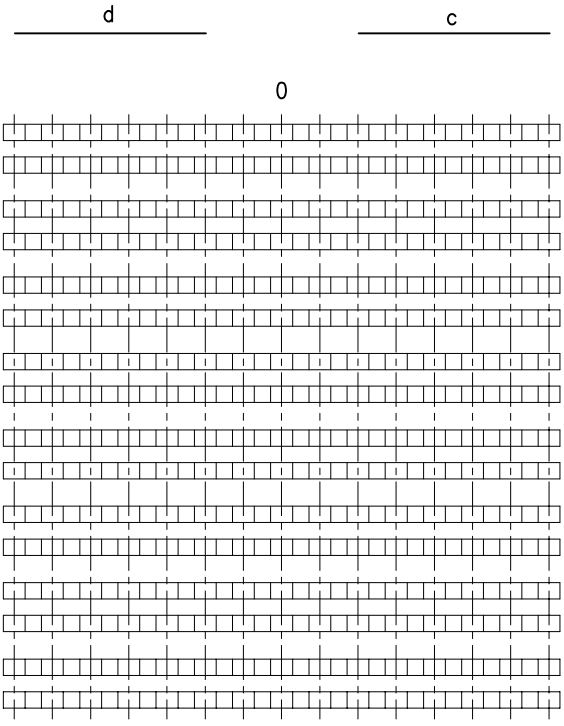

Typ:

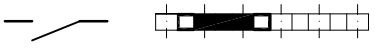

Kontaktüberlappung (Überschneidung)
contact overlapping



Schwarzes Feld = Kontakt geschlossen
black field = contact closed

Spohn + Burkhardt
Elektrotechnische Fabrik Blaubeuren

Mauergasse 5
89143 BLAUBEUREN
GERMANY

Tel. +49 7344 171-0 info@spobu.de
Fax +49 7344 171-99 www.spobu.de

01.01.2014

Verbund–Meisterschalter Antrieb V, Anordnung N	Controller Drive V Arrangement N	Tag: Day:	Kunde: Customer:
		Name: Name:	Zeichnungs–Nr.: Drawing–Nr.:

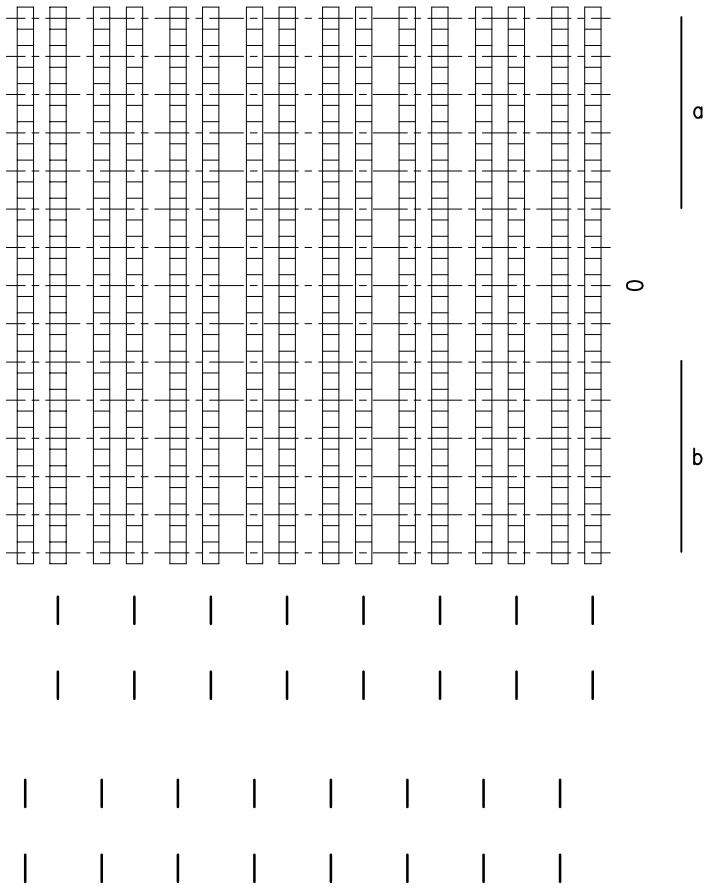

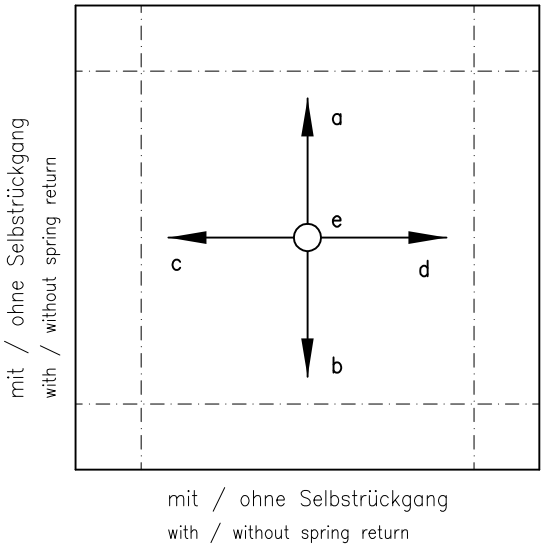

mit / ohne Selbstrückgang
with / without spring return

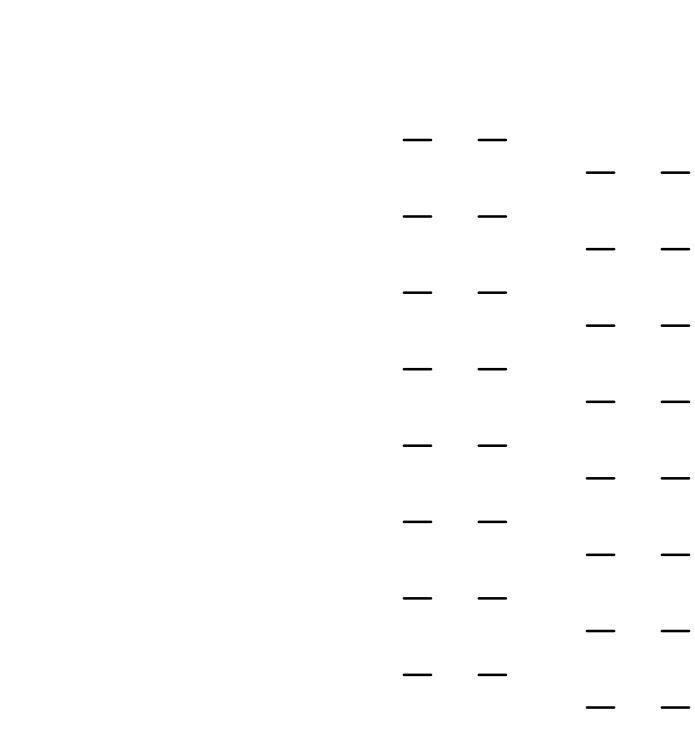

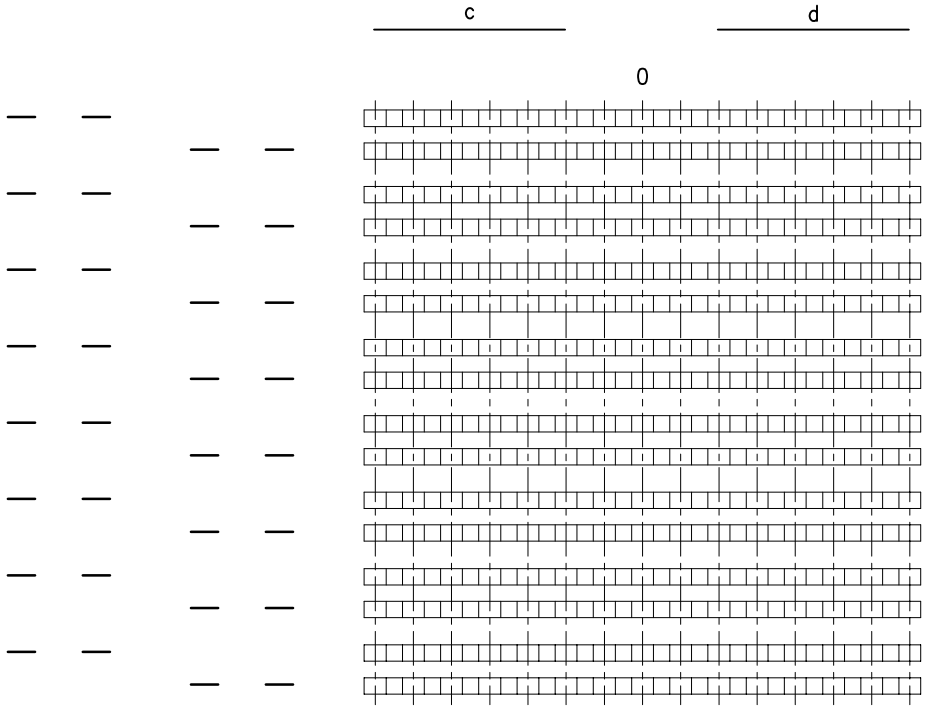

Typ:



Kontaktüberlappung (Überschneidung)
contact overlapping

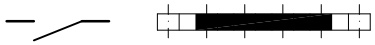

Schwarzes Feld = Kontakt geschlossen
black field = contact closed

Spohn + Burkhardt
Elektrotechnische Fabrik Blaubeuren

Mauergasse 5
89143 BLAUBEUREN
GERMANY

Tel. +49 7344 171-0 info@spobu.de
Fax +49 7344 171-99 www.spobu.de

01.01.2014

Verbund–Meisterschalter Antrieb V, Anordnung U

Controller Drive V Arrangement U

Tag: Day:	Kunde: Customer:
Name: Name:	Zeichnungs–Nr.: Drawing–Nr.:

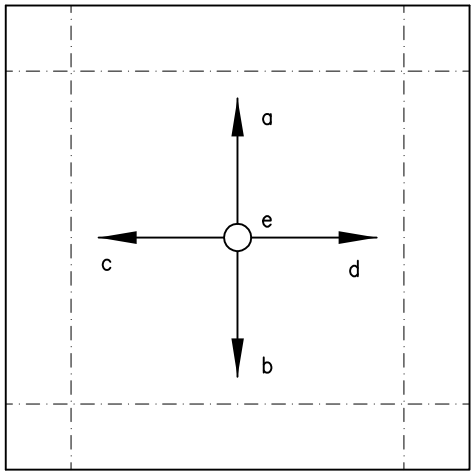

mit / ohne Selbstrückgang
with / without spring return

mit / ohne Selbstrückgang
with / without spring return

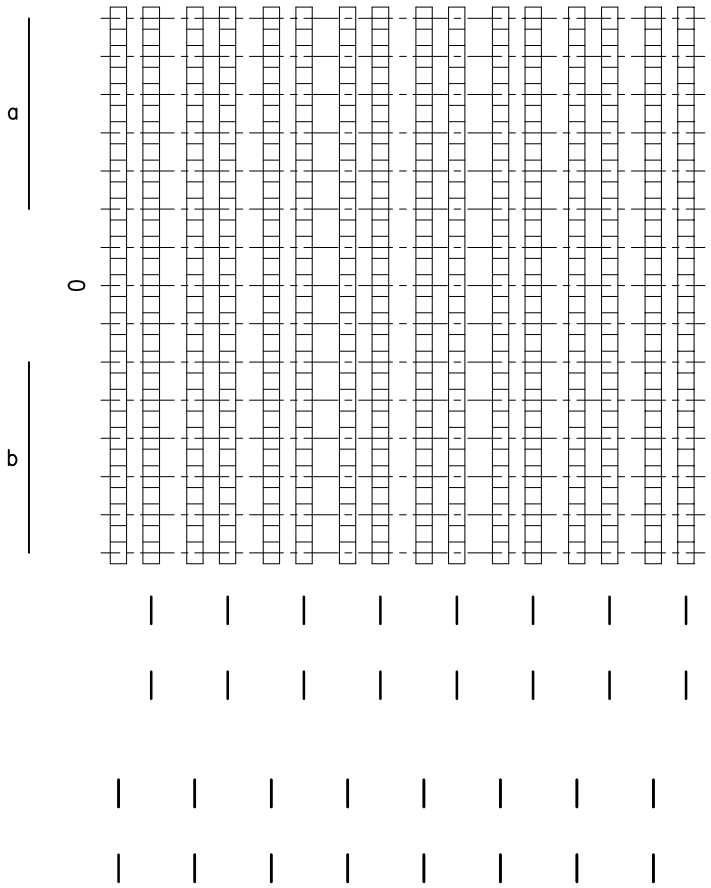

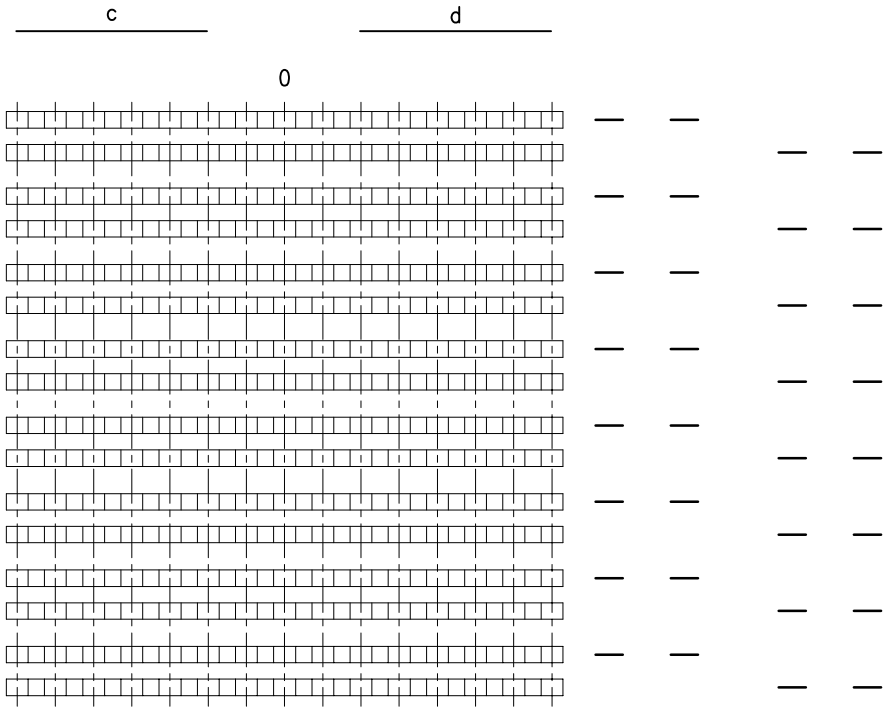

Typ:



Kontaktüberlappung (Überschneidung)
contact overlapping



Schwarzes Feld = Kontakt geschlossen
black field = contact closed

Spohn + Burkhardt
Elektrotechnische Fabrik Blaubeuren

Mauergasse 5
89143 BLAUBEUREN
GERMANY

Tel. +49 7344 171-0 info@spobu.de
Fax +49 7344 171-99 www.spobu.de

01.01.2014

Verbund–Meisterschalter Antrieb V, Anordnung X — Controller Drive V Arrangement X	Tag: Day:	Kunde: Customer:
	Name: Name:	Zeichnungs–Nr.: Drawing–Nr.:

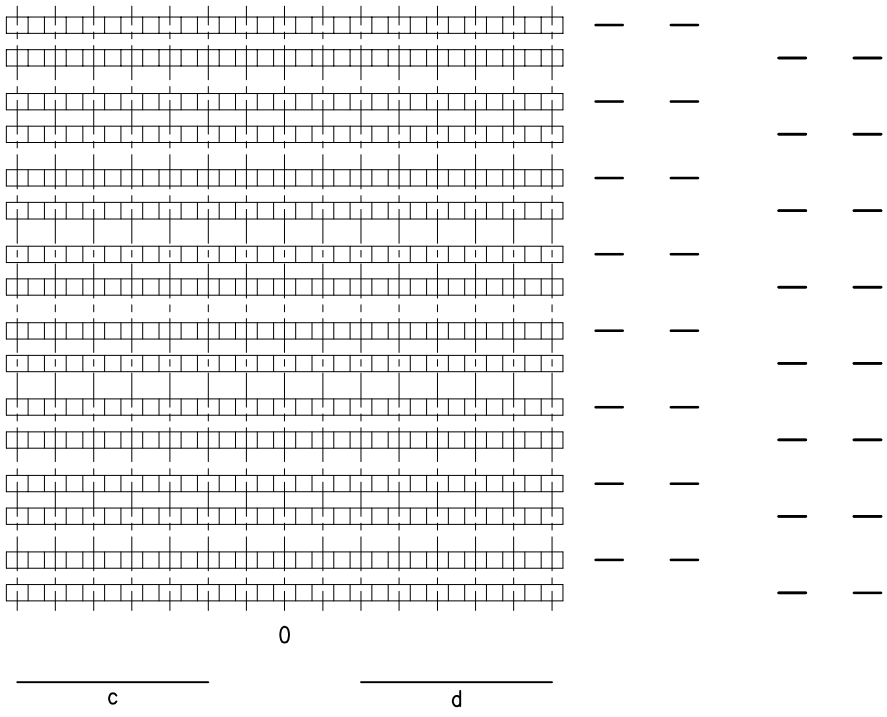

Bei Rosettengravur angeben.
Specify for engraving

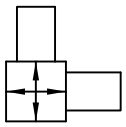

linke Hand
left hand

rechte Hand
right hand

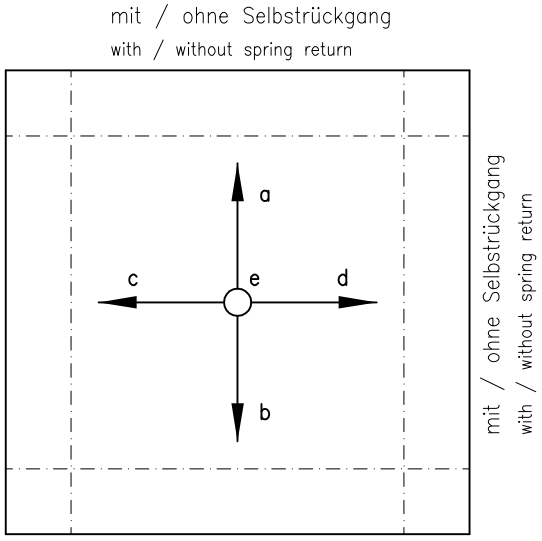

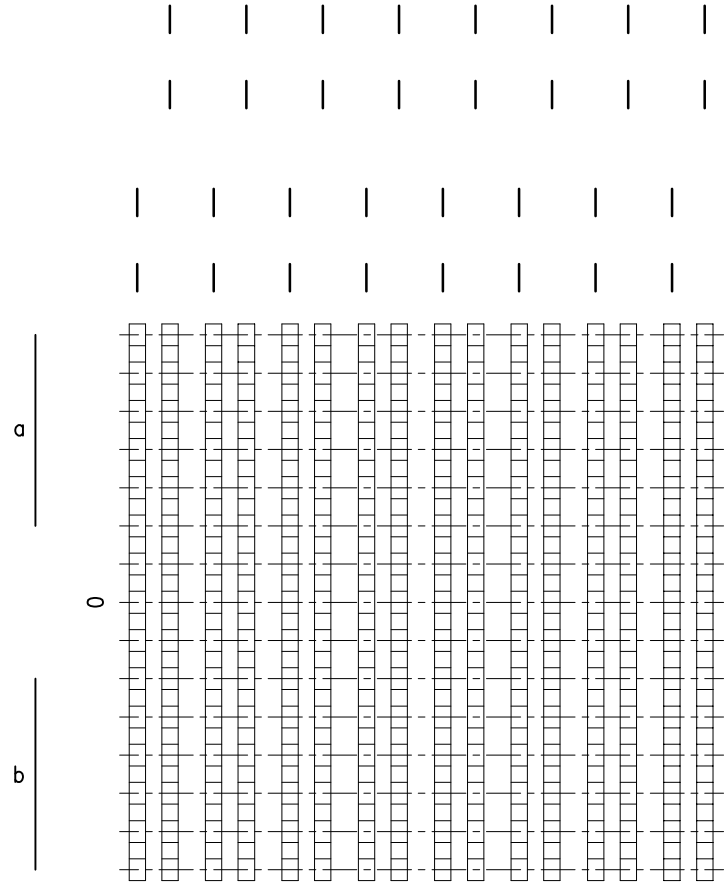

Typ:

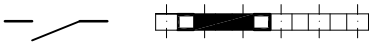

Kontaktüberlappung (Überschneidung)
contact overlapping



Schwarzes Feld = Kontakt geschlossen
black field = contact closed

Spohn + Burkhardt
Elektrotechnische Fabrik Blaubeuren

Mauergasse 5
89143 BLAUBEUREN
GERMANY

Tel. +49 7344 171-0 info@spobu.de
Fax +49 7344 171-99 www.spobu.de

01.01.2014

Verbund–Meisterschalter Antrieb V, Anordnung Y	Controller Drive V Arrangement Y	Tag: Day:	Kunde: Customer:
		Name: Name:	Zeichnungs–Nr.: Drawing–Nr.:

Bei Rosettengravur angeben.
Specify for engraving

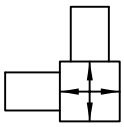

linke Hand
left hand

rechte Hand
right hand

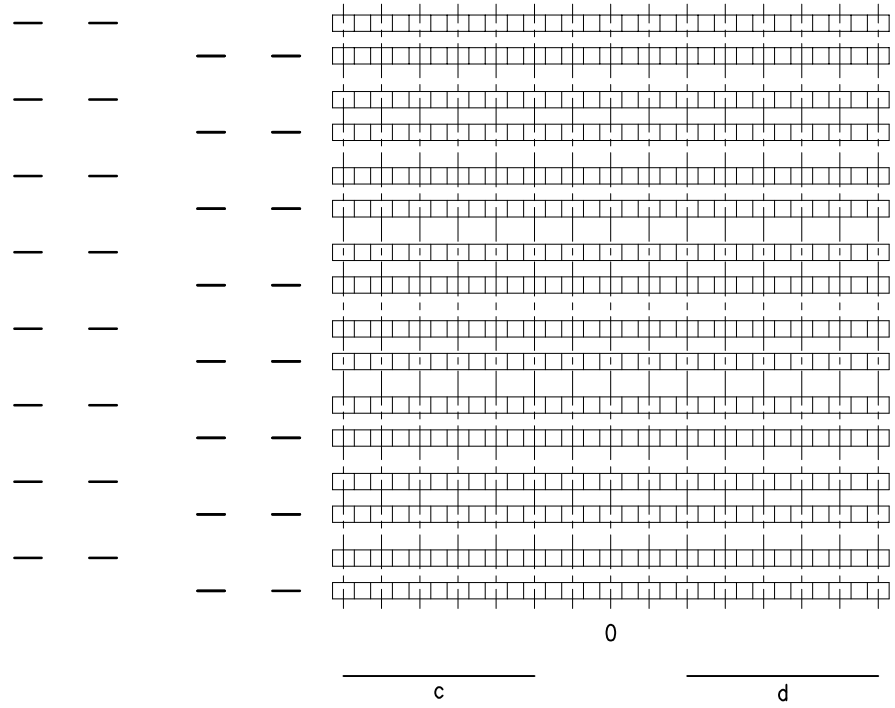

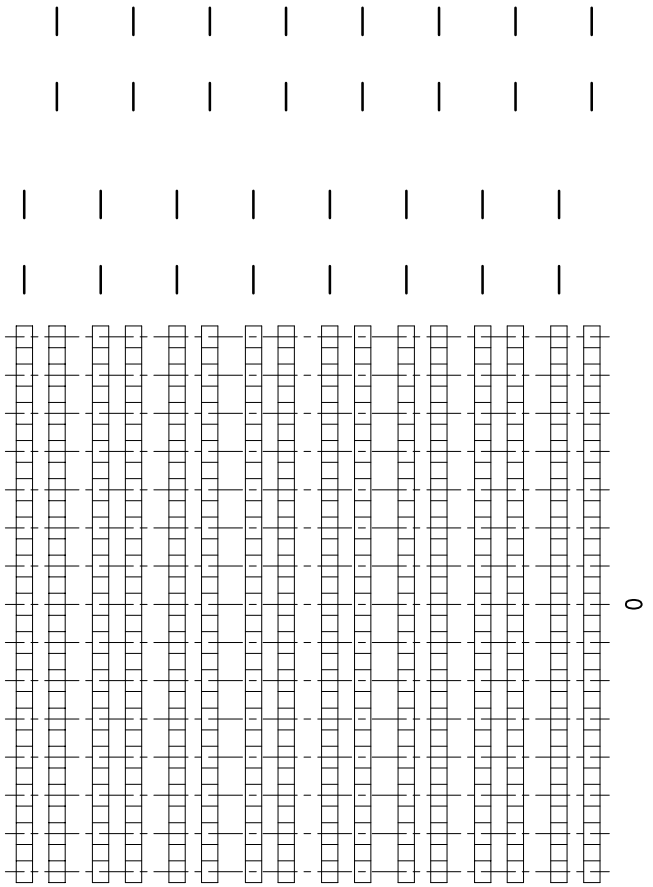

mit / ohne Selbstrückgang
with / without spring return

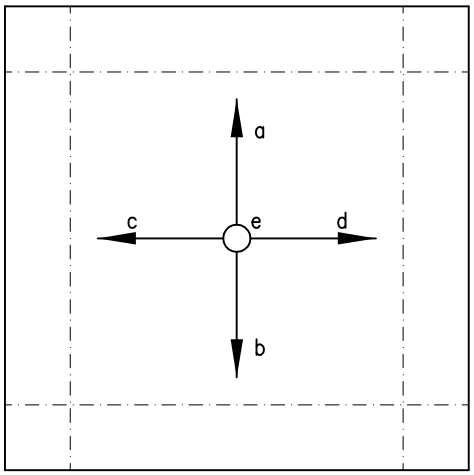

mit / ohne Selbstrückgang
with / without spring return

Typ:

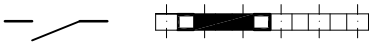

Kontaktüberlappung (Überschneidung)
contact overlapping



Schwarzes Feld = Kontakt geschlossen
black field = contact closed

Spohn + Burkhardt
Elektrotechnische Fabrik Blaubeuren

Mauergasse 5
89143 BLAUBEUREN
GERMANY

Tel. +49 7344 171-0 info@spobu.de
Fax +49 7344 171-99 www.spobu.de

Universalgriffe UG, UGN
Universal handles UG, UGN

List 7 / 2014
M 3/3

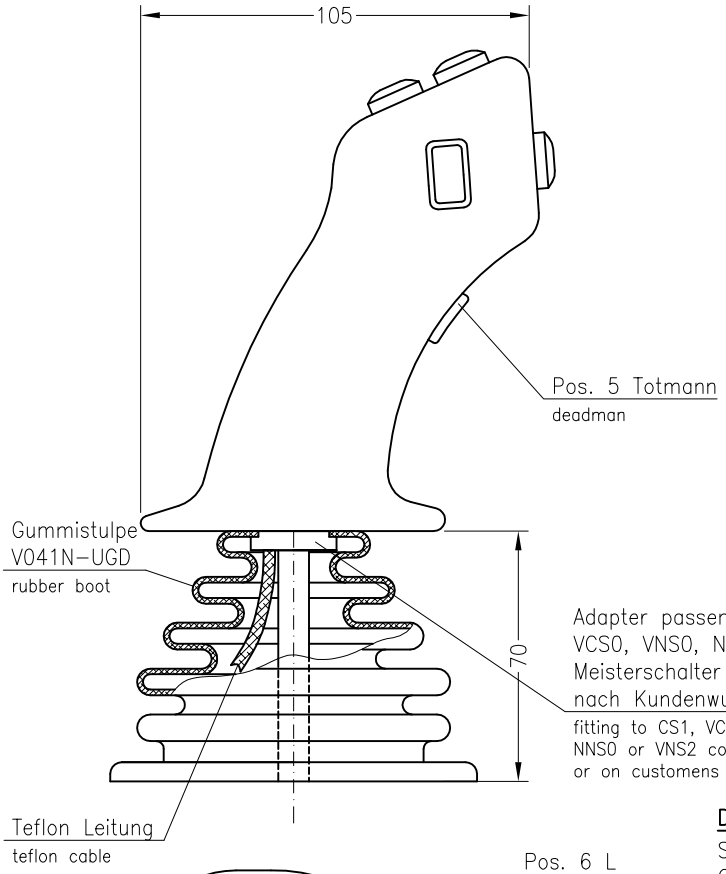

Adapter passend zu CS1, VCS0, VNS0, NNS0 und VNS2 Meisterschalter oder nach Kundenwunsch
fitting to CS1, VCS0 , VNS0, NNS0 or VNS2 controllers or on customens demand

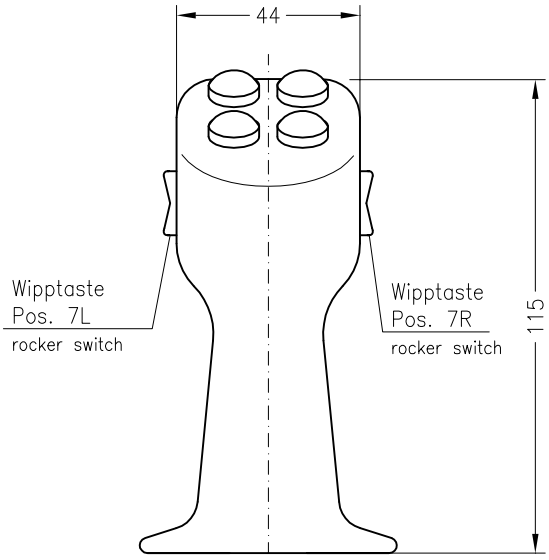

Auf Wunsch andere Anordnungen
different configuration on request

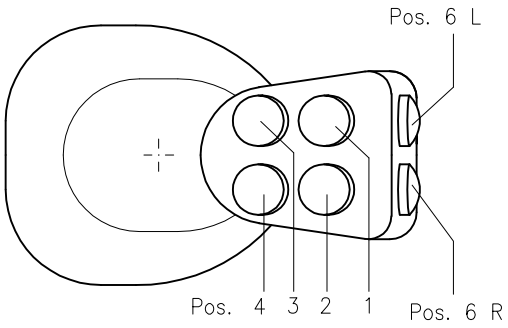

Drucktasten:

Silberkontakt mit Goldauflage	48 VAC	500 mA
Schutzart IP67	24 VDC	2 A
	min 5 VDC	1 mA

Ohmsche Last
ohmic value

silver contact, gold plated push button IP67

Typ:
Mit flacher Kappe P9F– ...,
mit hoher Kappe P9H– ... └─+Farbe
with flat and high cap,

colour		Kurzzeichen short cut
blau	(blue)	BU
gelb	(yellow)	YE
grün	(green)	GN
rot	(red)	RD
schwarz	(black)	BK
weiß	(white)	WH
grau	(grey)	GY
violett	(violet)	VT
orange	(orange)	OG

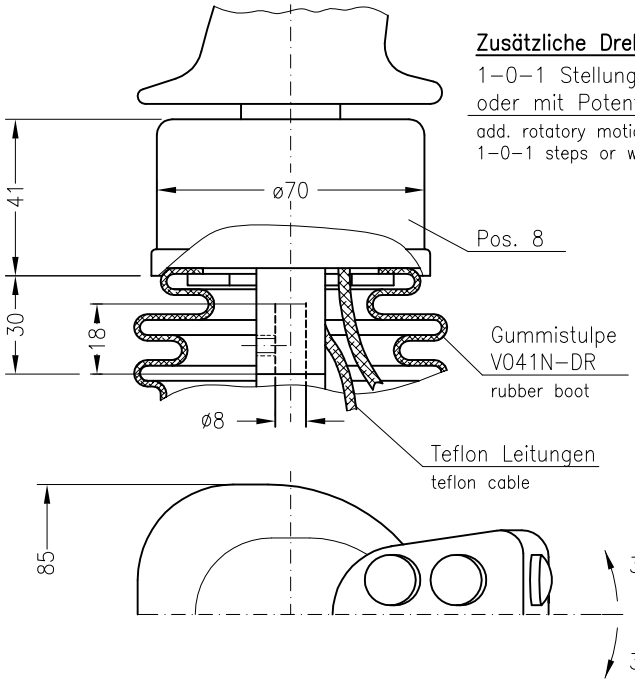

Zusätzliche Drehbewegung:
1–0–1 Stellungen oder mit Potentiometer
add. rotatory motion with 1–0–1 steps or with poti

Typ UG
Ausführung ohne Kragen
version without flange

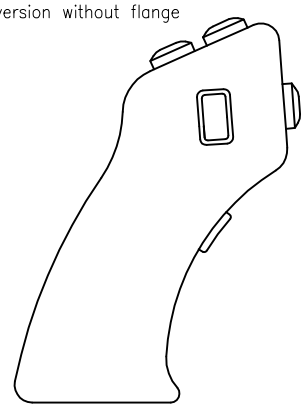

Spohn+Burkhardt
Elektrotechnische Fabrik Blaubeuren

Mauergasse 5
89143 BLAUBEUREN
GERMANY

Tel. +49 7344 171-0 info@spobu.de
Fax +49 7344 171-99 www.spobu.de

Ausführung mit Drucktasten und Wippschaltern:
Version with push buttons and rockers:

Hinweis: UGD–Griffe liefern wir ohne Bohrungen oder mit Bohrungen und Einbauten nach Kundenvorgabe

Note: We deliver UGD–handles without bores or with bores and installations according to client's requirement

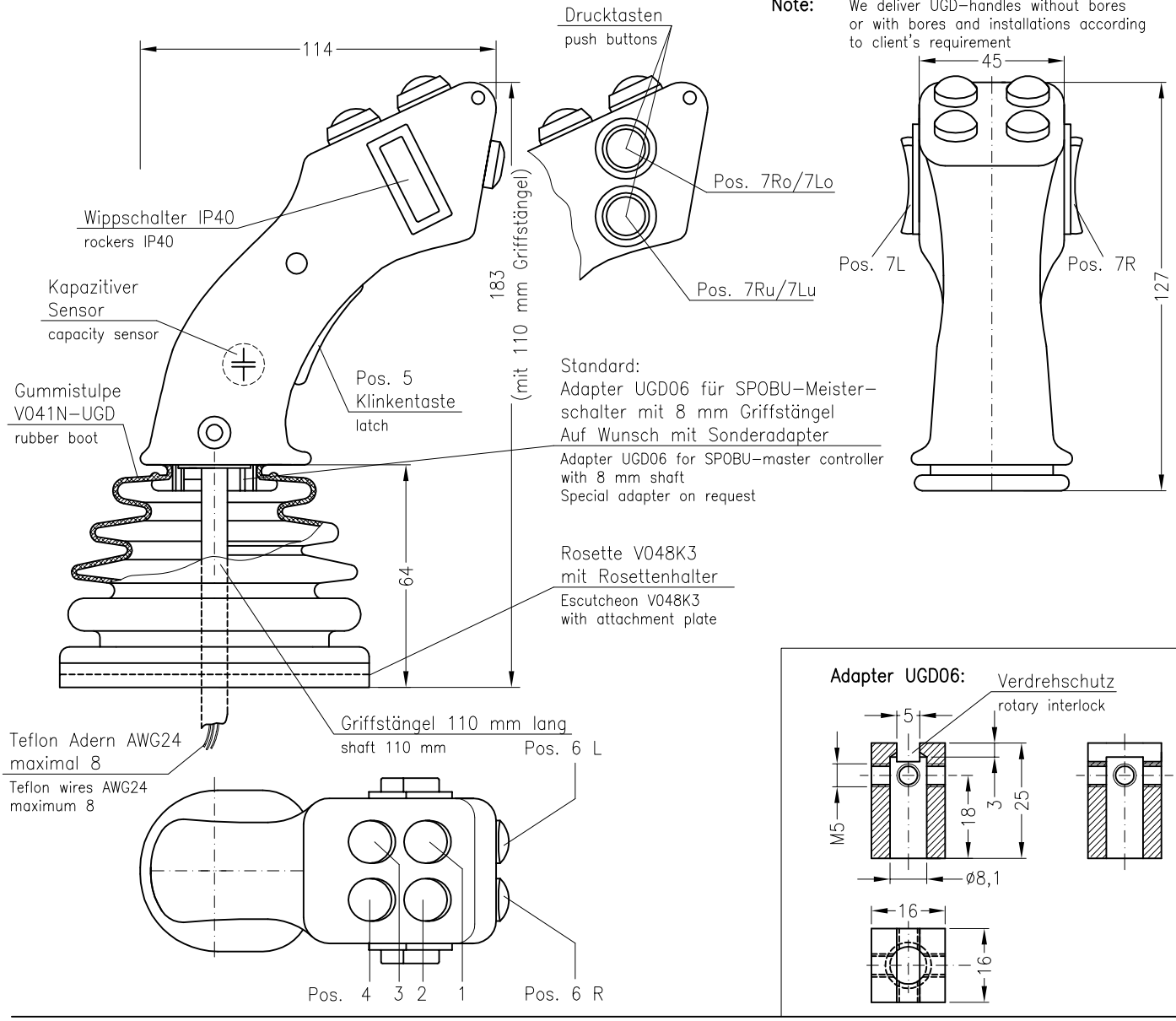

Adapter UGD06:

Ausführung mit Drehpotentiometer: Version with twist poti:
Einbau: 1–4 possible position: 1–4

Ausführung mit Analogwippe: Version with analog rocker:
Einbau: 1+3, 2+4, 7L, 7R position: 1+3, 2+4, 7L, 7R

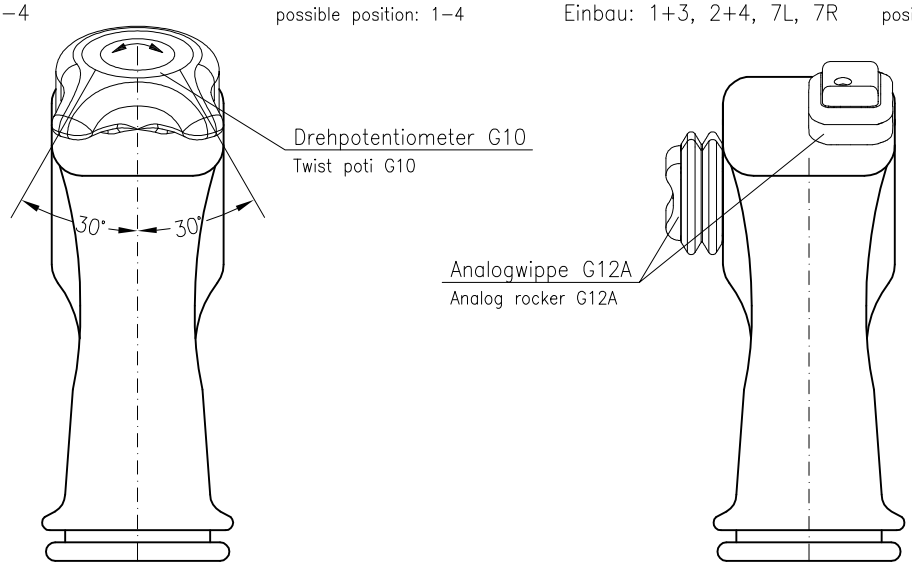

Technische Daten:
Material: PA6
Schutzart:
IP56 ohne Einbauten
IP56 mit Drucktasten
IP40 mit Wippen

Technical data:
Material: PA6
Degree of protection:
IP56 without inserts
IP56 with push buttons
IP40 with rockers

Spohn + Burkhardt
Elektrotechnische Fabrik Blaubeuren

Mauergasse 5
89143 BLAUBEUREN
GERMANY

Tel. +49 7344 171-0 info@spobu.de
Fax +49 7344 171-99 www.spobu.de

Universalgriff UGCL, UGCR
Universal handle UGCL, UGCR

List 7 / 2014
M 3/3C

UGC–Griffe liefern wir ohne oder mit Einbauten nach Kundenvorgabe
We deliver UGC–handles without or with inserts according to client's requirement

Technische Daten:
Material: PA6
Schutzart:
IP56 ohne Einbauten
IP56 mit Drucktasten

Technical data:
Material: PA6
Degree of protection:
IP56 without inserts
IP56 with push buttons

Griff UGCL
Handle

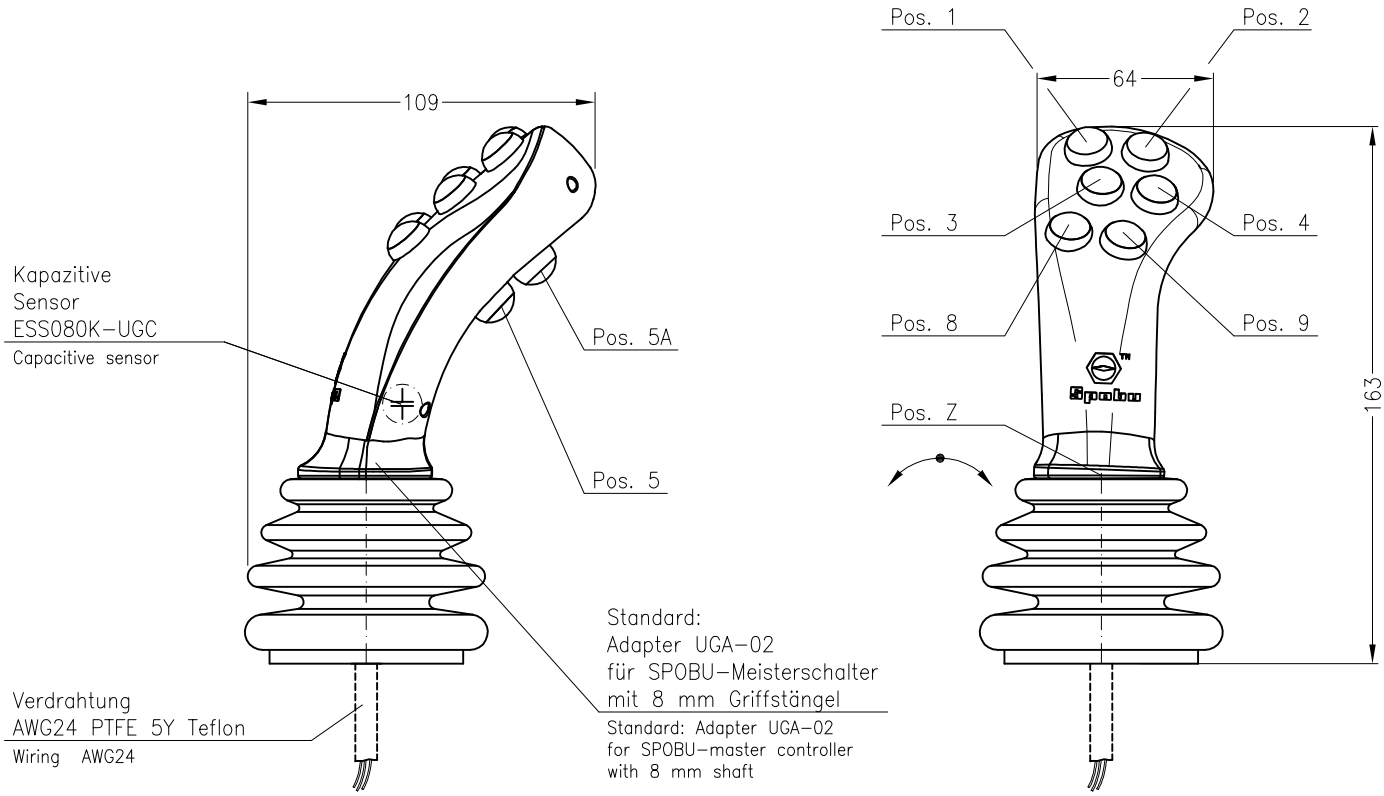

Griff UGCR
Handle

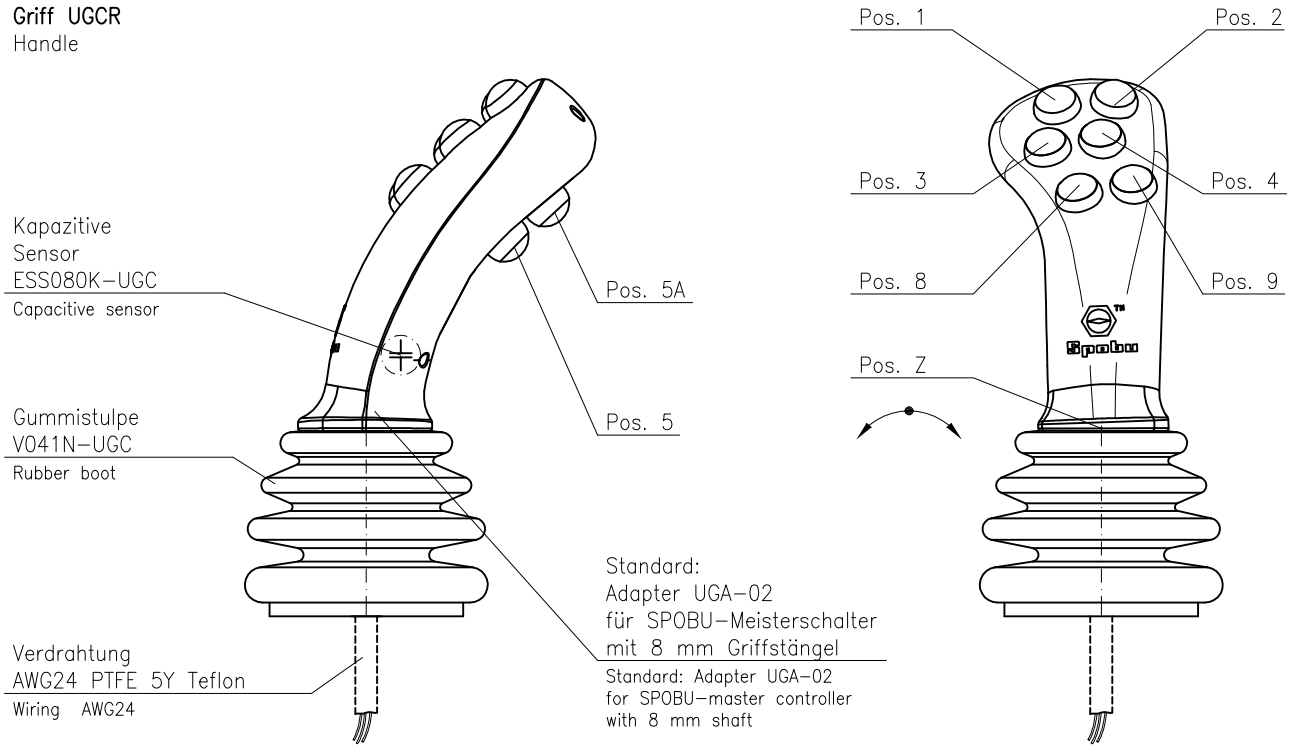

Spohn + Burkhardt
Elektrotechnische Fabrik Blaubeuren

Mauergasse 5
89143 BLAUBEUREN
GERMANY

Tel. +49 7344 171-0 info@spobu.de
Fax +49 7344 171-99 www.spobu.de

1–0–1 Stellungen mit Selbstrückgang
1–0–1 steps with spring return

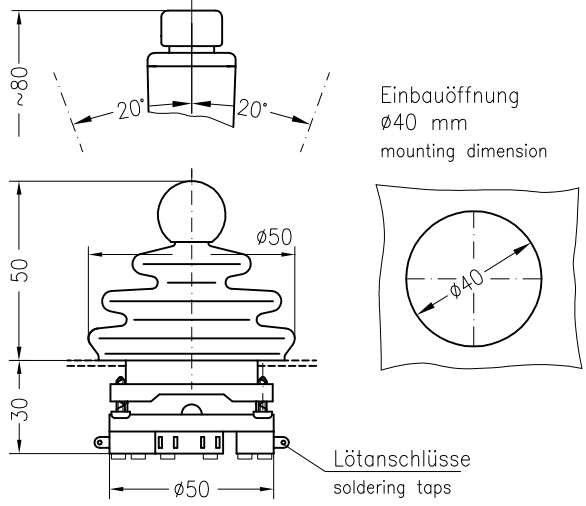

Ohmsche Last 250 V ~ AC 2 A
ohmic value 24 V = DC 1 A

Silberkontakt mit Goldauflage
silver contact, gold plated

Silberkontakt
silver contact

Mikroschalter 1S, 1Ö
microswitch 1NO, 1NC

M0N5ER(HD)OS

M0N5VR(HD)OS OS

Mikroschalter 1 Wechsler
microswitch 1change over contact

M0N5ER(HD)WK

M0N5VR(HD)WK WK

evtl. mit Taste
push button in handle on request

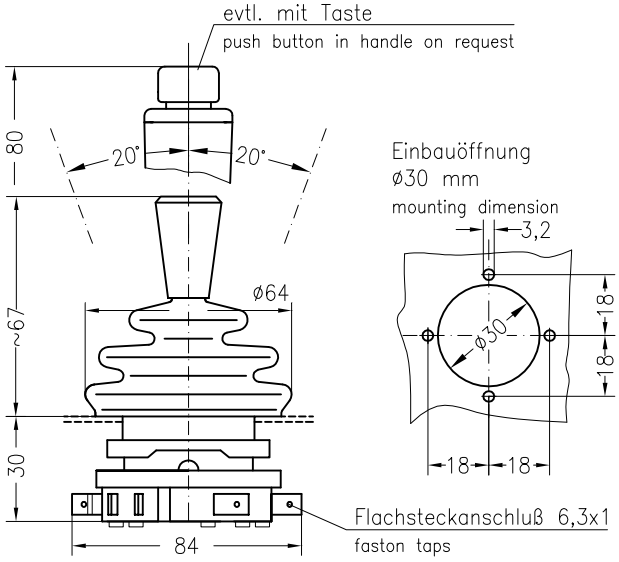

Ohmsche Last 250 V ~ AC 6 A
ohmic value 24 V = DC 1 A

Silberkontakt
silver contact

ind.250 V ~ 3 A
cos. ø = 0,7 Φ

Mikroschalter 1 Wechsler
microswitch 1change over contact

M0N6ER(HD)W

M0N6VR(HD)W W

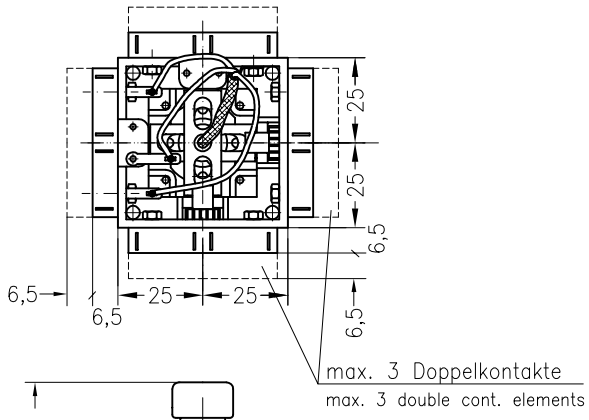

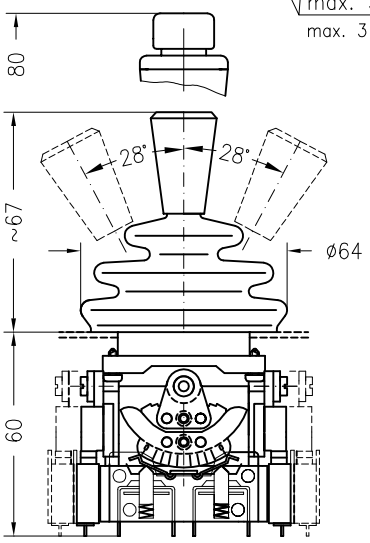

max. 5–0–5 Stellungen
mit oder ohne Selbstrückgang
5–0–5 steps

zwangsbetätigte Tastkontakte mit Goldauflage oder Silberauflage
force actuated goldcontacts or silvercontacts

Typ

GM0N6E...
SM0N6E...

GM0N6V...
SM0N6V...

Gewicht ~ 0,1 kg
weight ~ 0,1 kg

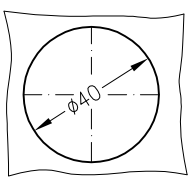

Einbauöffnung
ø40 mm
mounting dimension

Spohn+Burkhardt
Elektrotechnische Fabrik Blaubeuren

Mauergasse 5
89143 BLAUBEUREN
GERMANY

Tel. +49 7344 171-0 info@spobu.de
Fax +49 7344 171-99 www.spobu.de

Kleinmeisterschalter M0N mit Potentiometer
Controller M0N with potentiometer

List 7 / 2014
M 4/1B

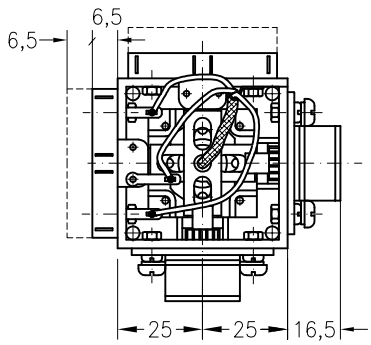

Einbauöffnung
ø40 mm
mounting dimension

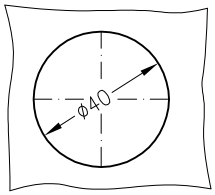

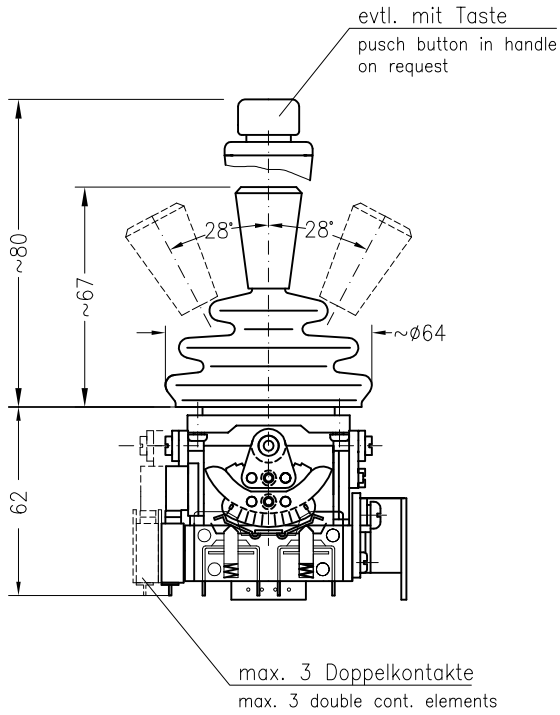

evtl. mit Impedanzwandler 4–20 mA
potentiometer – conductiv plastic

Potentiometer ohne Mittelanzapfung
potentiometer without centre tap

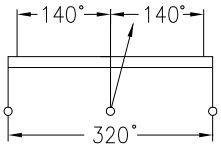

Leitplastik
conductivplastic
1 kOhm Typ : B1
5 kOhm : B5
10 kOhm : B10

Achtung Schleiferbelastung max. 1 mA
warning: wiper current max. 1 mA

Potentiometer mit Mittelanzapfung und Kurzschlußstrecken
potentiometer with centre tap and short circuit path

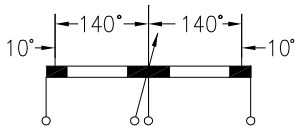

Leitplastik
conductiv plastic
5–0–5 kOhm Typ: B55
10–0–10 kOhm Typ: B1010

Achtung: Schleiferbelastung max. 1 mA
warning: wiper current max. 1 mA

Drahtgewickelte Potentiometer – 2 Watt
potentiometer wire wound – 2 Watt
PD 200 1–0–1 kOhm
5–0–5 kOhm
10–0–10 kOhm

Typ: **SMON6ER––B**
GMON6ER––B

Gewicht: 0,16 kg
weight: 0,16 kg

Potentiometertyp
potentiometertype

Schaltung
circuit

SMON6VR––B––B––
GMON6VR––B––B––

Gewicht: 0,2 kg
weight: 0,2 kg

Andere Potentiometer und Ohmwerte, bzw. Spannungs– oder Stromausgang auf Anfrage
other potentiometer or ohmic value on request

Spohn + Burkhardt
Elektrotechnische Fabrik Blaubeuren

Mauergasse 5
89143 BLAUBEUREN
GERMANY

Tel. +49 7344 171-0 info@spobu.de
Fax +49 7344 171-99 www.spobu.de

Stirnradantrieb ST0, Schutzart IP54 frontseitig
Single axis master controller ST0, protection IP54 front side

List 7 / 2014
M 5/2

1–0–1 Stellungen mit Mikroschaltern
1–0–1 steps with micro switches

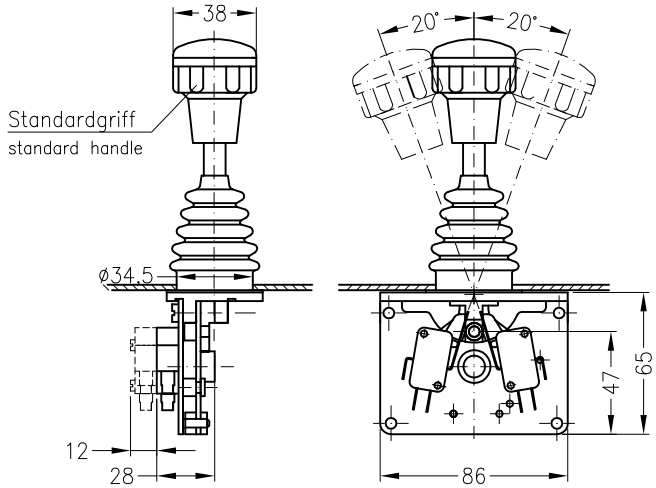

stufenlos mit Mikroschalter und Potentiometer
with micro switch and potentiometer

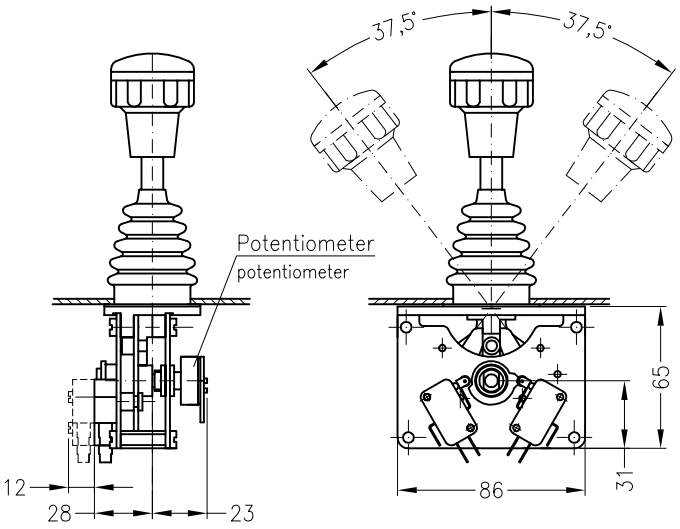

mit Kontaktblock NS0 für max. 4–0–4 Stellungen Potentiometeranbau möglich
with NS0 double contactblock max. 4–0–4 step, potentiometer possible

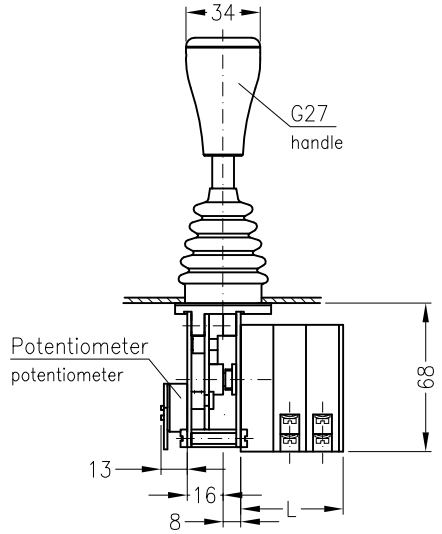

Anzahl Doppelkontaktelemente number of double contact elements	1	2	3
L	35	50	65

mit Ballengriff
with palm handle

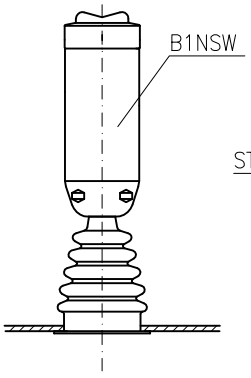

mit mechanischer Nullstellungsverriegelung
with mechanical interlock

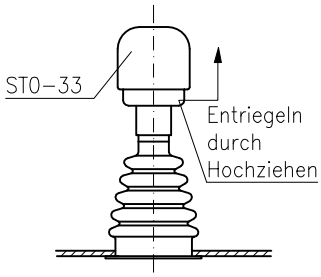

Befestigungsmaße
mounting dimensions

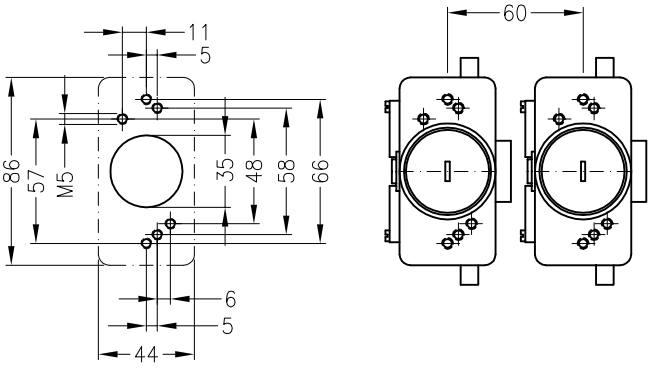

Spohn + Burkhardt
Elektrotechnische Fabrik Blaubeuren

Mauergasse 5
89143 BLAUBEUREN
GERMANY

Tel. +49 7344 171-0 info@spobu.de
Fax +49 7344 171-99 www.spobu.de

Stirnradantrieb ST2, Schutzart IP54 frontseitig
Drive ST2, protection IP54 front side

List 7 / 2014
M 5/5

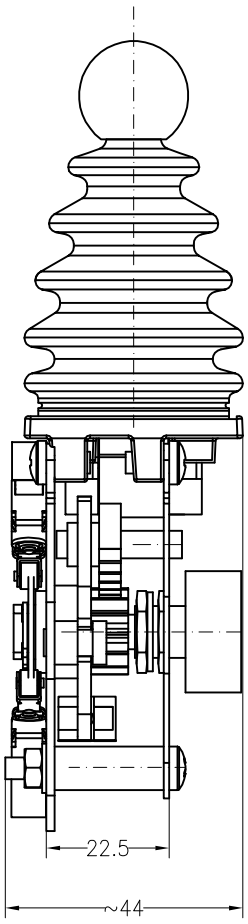

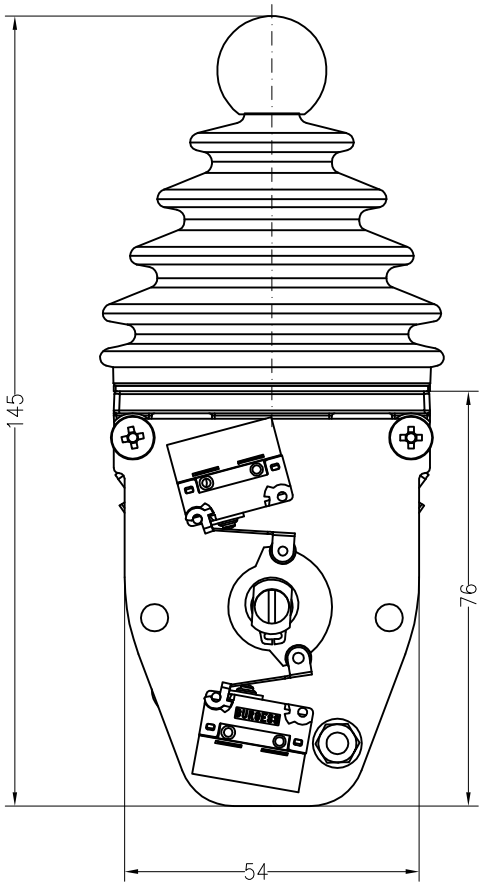

Befestigungsmaße
mounting dimensions

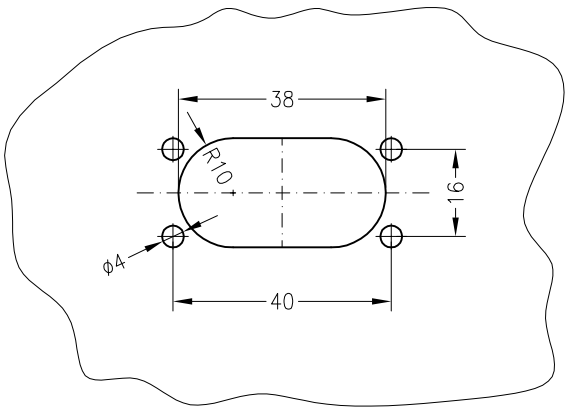

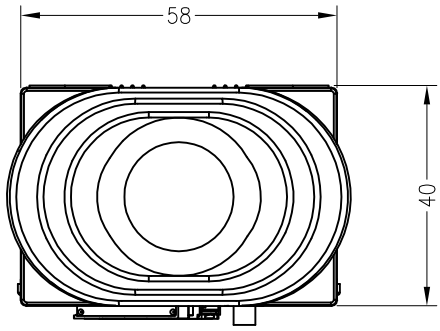

Spohn+Burkhardt
Elektrotechnische Fabrik Blaubeuren

Mauergasse 5
89143 BLAUBEUREN
GERMANY

Tel. +49 7344 171-0 info@spobu.de
Fax +49 7344 171-99 www.spobu.de

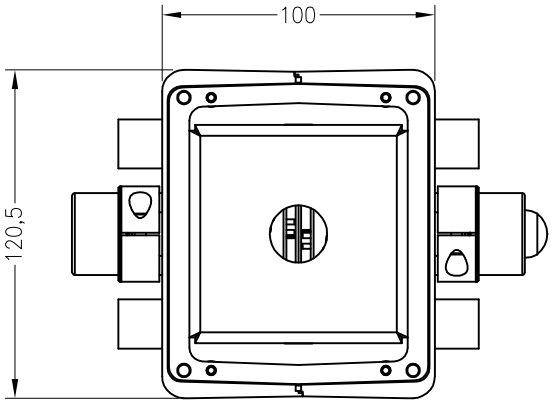

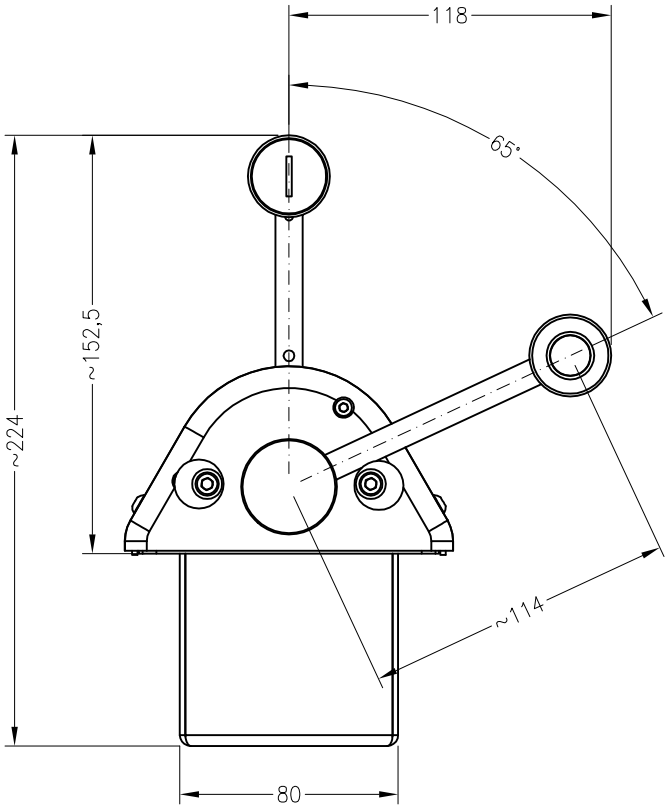

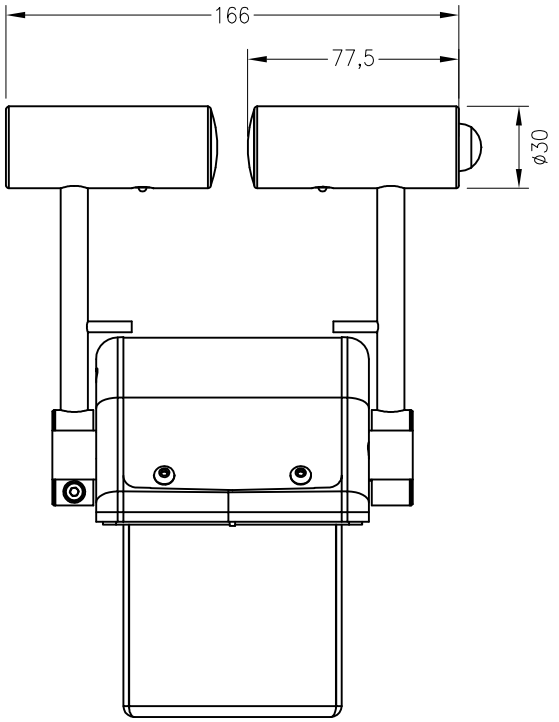

Einbauöffnung
mounting dimension

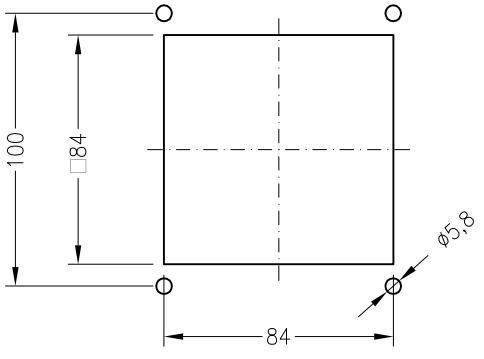

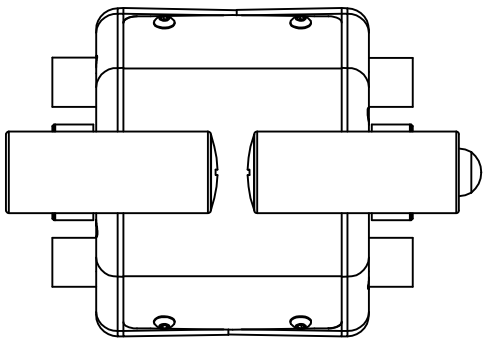

Spohn+Burkhardt
Elektrotechnische Fabrik Blaubeuren

Mauergasse 5
89143 BLAUBEUREN
GERMANY

Tel. +49 7344 171-0 info@spobu.de
Fax +49 7344 171-99 www.spobu.de

1–0–1 Stellungen
ohne Potentiometer
siehe Seite 5/2
1–0–1 step
without potentiometer
see sheet 5/2

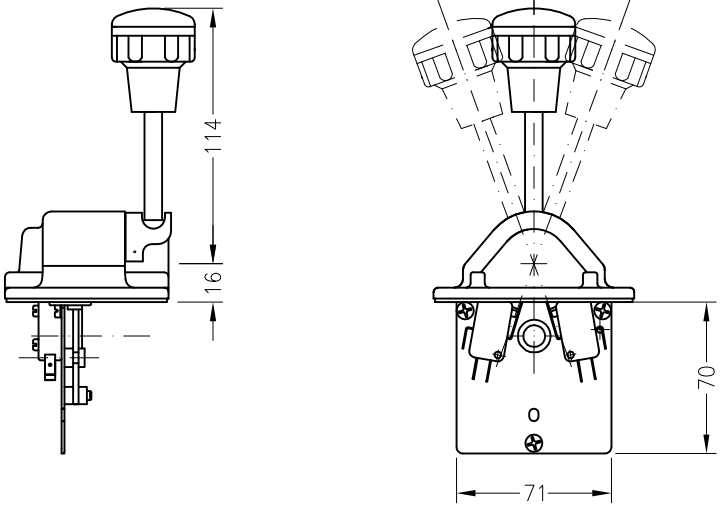

mit Potentiometer
siehe Seite 5/2
with potentiometer
see sheet 5/2

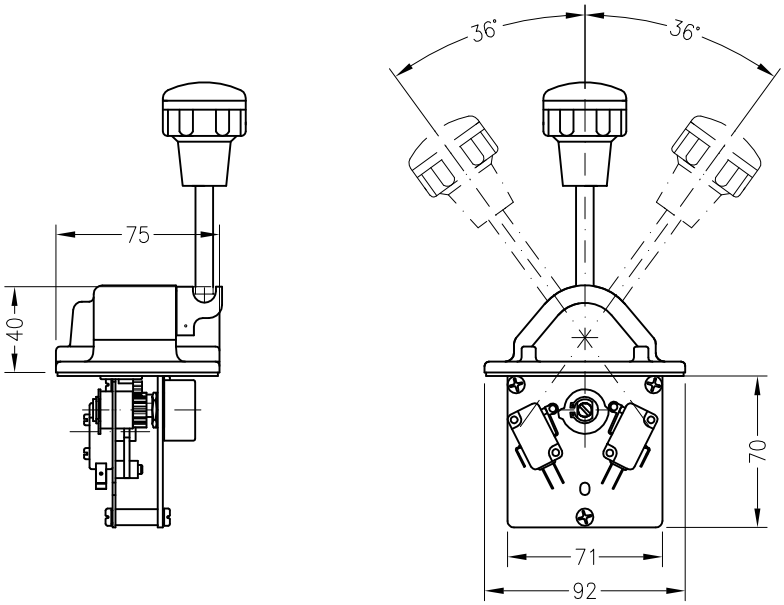

mit Verstärker
für Proportionalventil
siehe Seite 5/3
amplifier
for proportional valve
see sheet 5/3

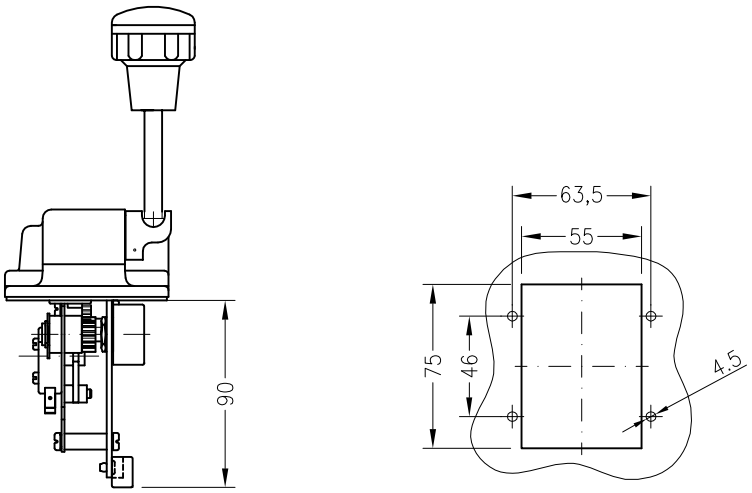

Spohn+Burkhardt
Elektrotechnische Fabrik Blaubeuren

Mauergasse 5
89143 BLAUBEUREN
GERMANY

Tel. +49 7344 171-0 info@spobu.de
Fax +49 7344 171-99 www.spobu.de

Grundausführung mit Doppelkontaktelementen
standard version with double contact elements:

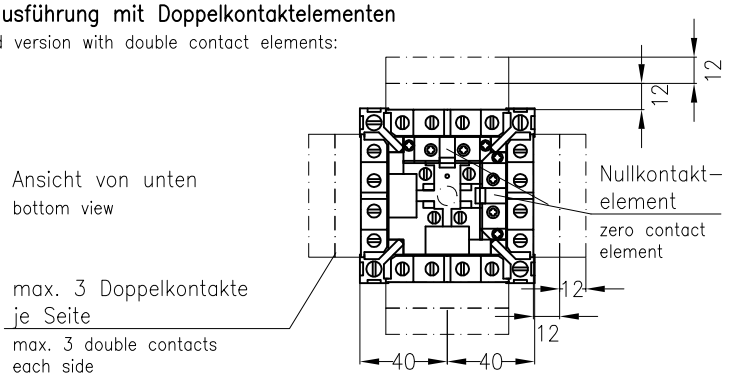

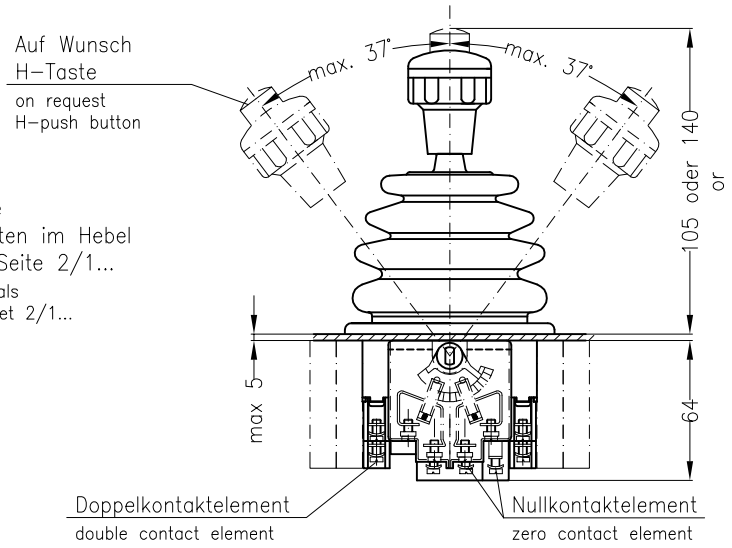

Montageanleitung Ausführung 96...
assembly instructions: version 72...
S...
S0...

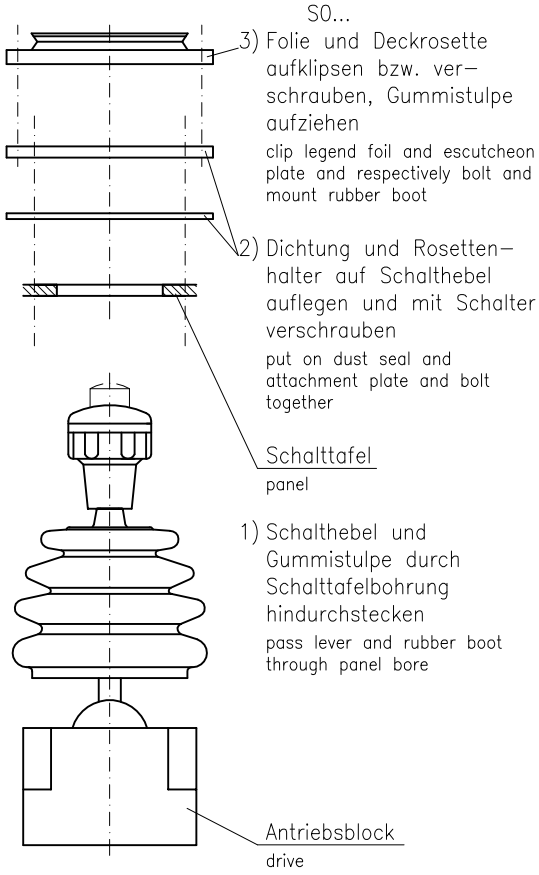

Ausführung mit Potentiometer PD550
version with attached potentiometer PD550

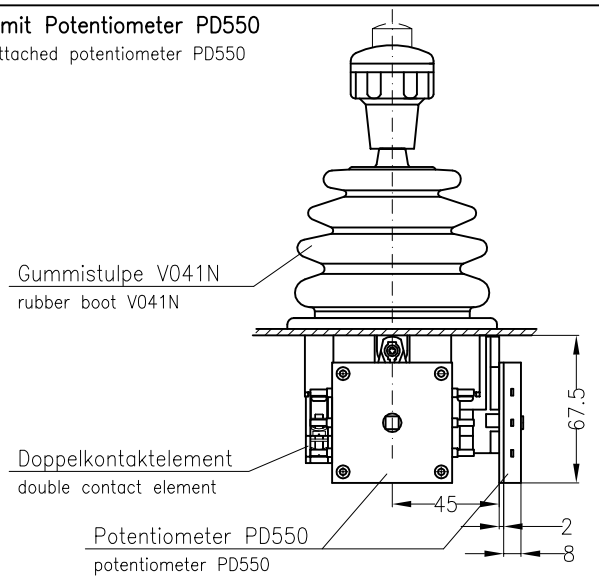

Montageanleitung Ausführung S1...
assembly instructions: version

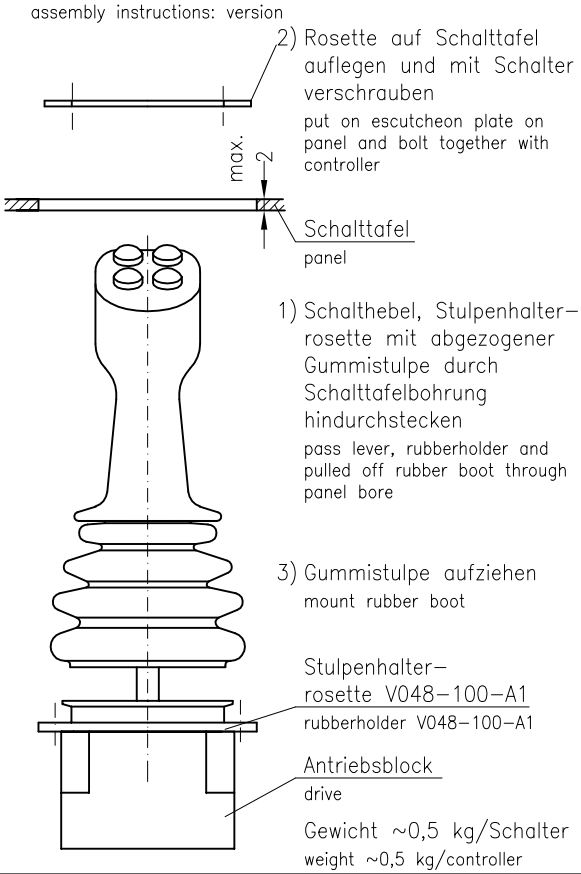

Ausführung mit optoelektro–nischem Absolutwertgeber
siehe Blatt 15/14 bis 15/16
version with optoelectronical
absolute encoder according
see sheet 15/14 till 15/16

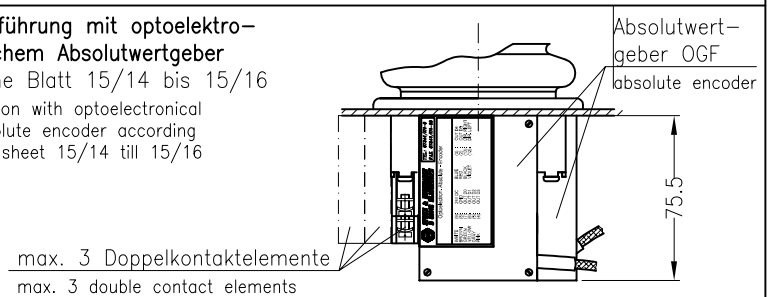

Spohn + Burkhardt
Elektrotechnische Fabrik Blaubeuren

Mauergasse 5
89143 BLAUBEUREN
GERMANY

Tel. +49 7344 171-0 info@spobu.de
Fax +49 7344 171-99 www.spobu.de

Meisterschalter VCS0
Master controller VCS0

List 7 / 2014
M 7/4A2

Ausführung VCS0 96...
mit transparenter Kunststoff–Rosette 96x96 und Beschriftungsfolie
with transparent escutcheon plate 96x96 and inscription foil

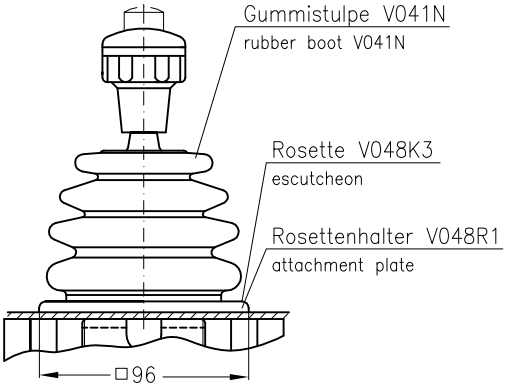

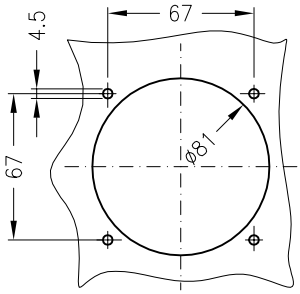

Befestigungsbohrung
mounting holes

Hinweis:
Auf Wunsch mit geschraubter schwarzer Aluminiumrosette 96x96
On request with screwed black aluminium escutcheon plate 96x96

Ausführung VCS0 S1...
mit Stulpenhalterrosette S1
with bracket for rubber boot + escutcheon plate

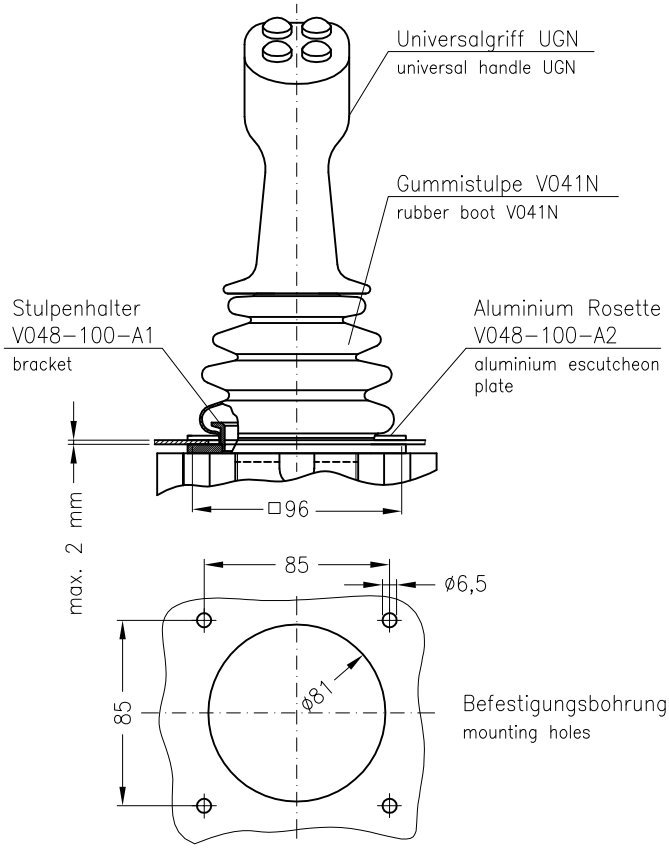

Befestigungsbohrung
mounting holes

Ausführung VCS0 72...
mit Aluminium Rosette schwarz 72x72, nicht beschriftbar
with aluminium escutcheon plate black 72x72, not inscribable

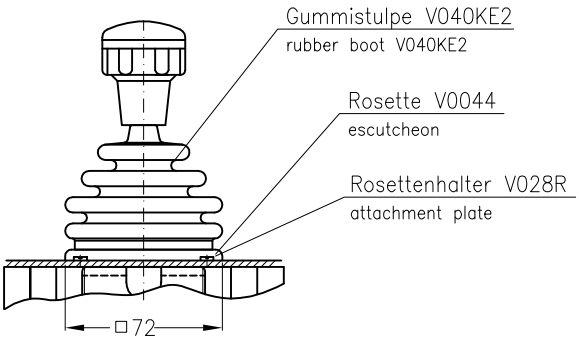

Ausführung VCS0 S0...
mit Stulpenhaltering S0
with bracket for rubber boot

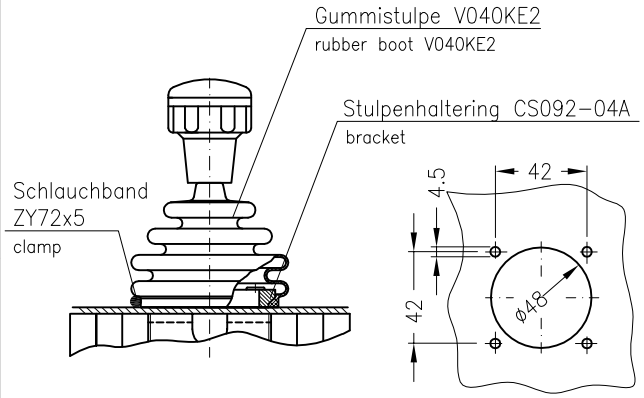

Befestigungsbohrung
mounting holes for

Ausführung VCS0 S...
mit Stulpenhaltering S
with bracket for rubber boot

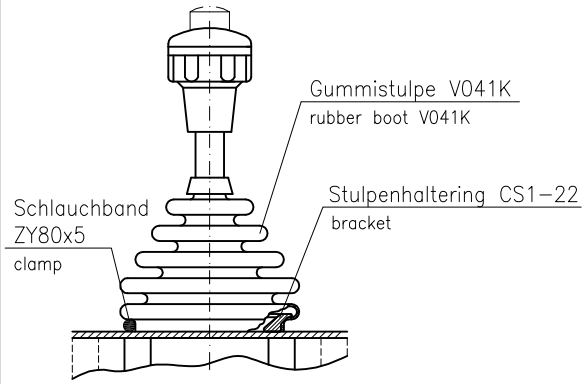

Gewicht ~0,5kg/Schalter
weight ~0,5kg/controller

Spohn+Burkhardt
Elektrotechnische Fabrik Blaubeuren

Mauergasse 5
89143 BLAUBEUREN
GERMANY

Tel. +49 7344 171-0 info@spobu.de
Fax +49 7344 171-99 www.spobu.de

Typ CS0–M1

M0– M1

Material: PC grau
material: PC grey

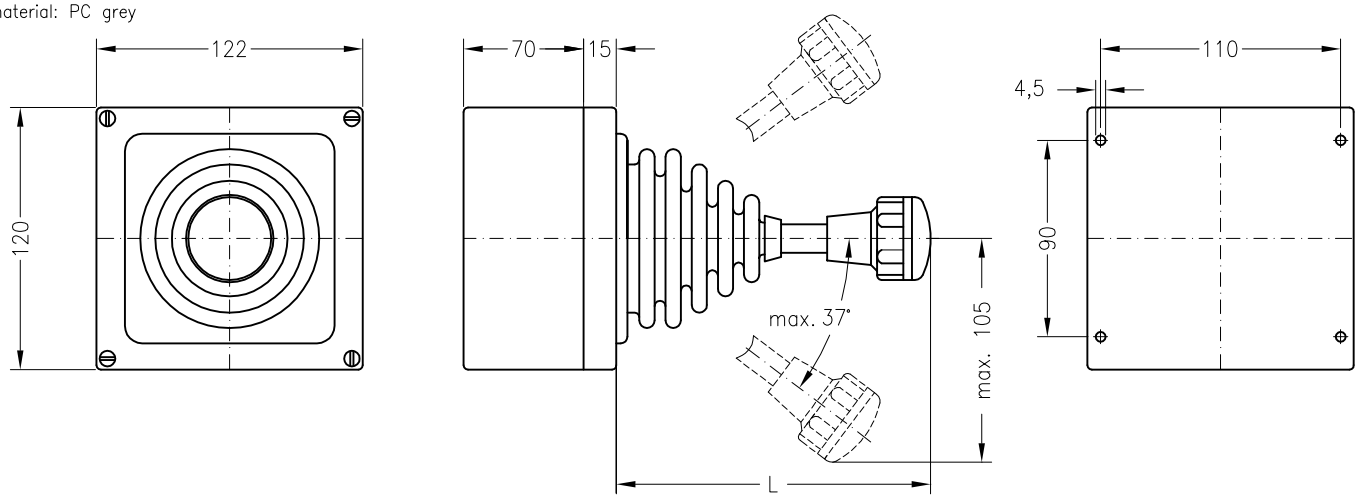

Gewicht ca. 0,8 kg
weight app. 0.8 kg

Hebellänge L= VCS0 105 mm oder 140 mm
shaft length M0 67 mm bzw. 80 mm mit HD

Typ CS0–M3

M0– M3

Material: PA 6 gelb
material: PA 6 yellow

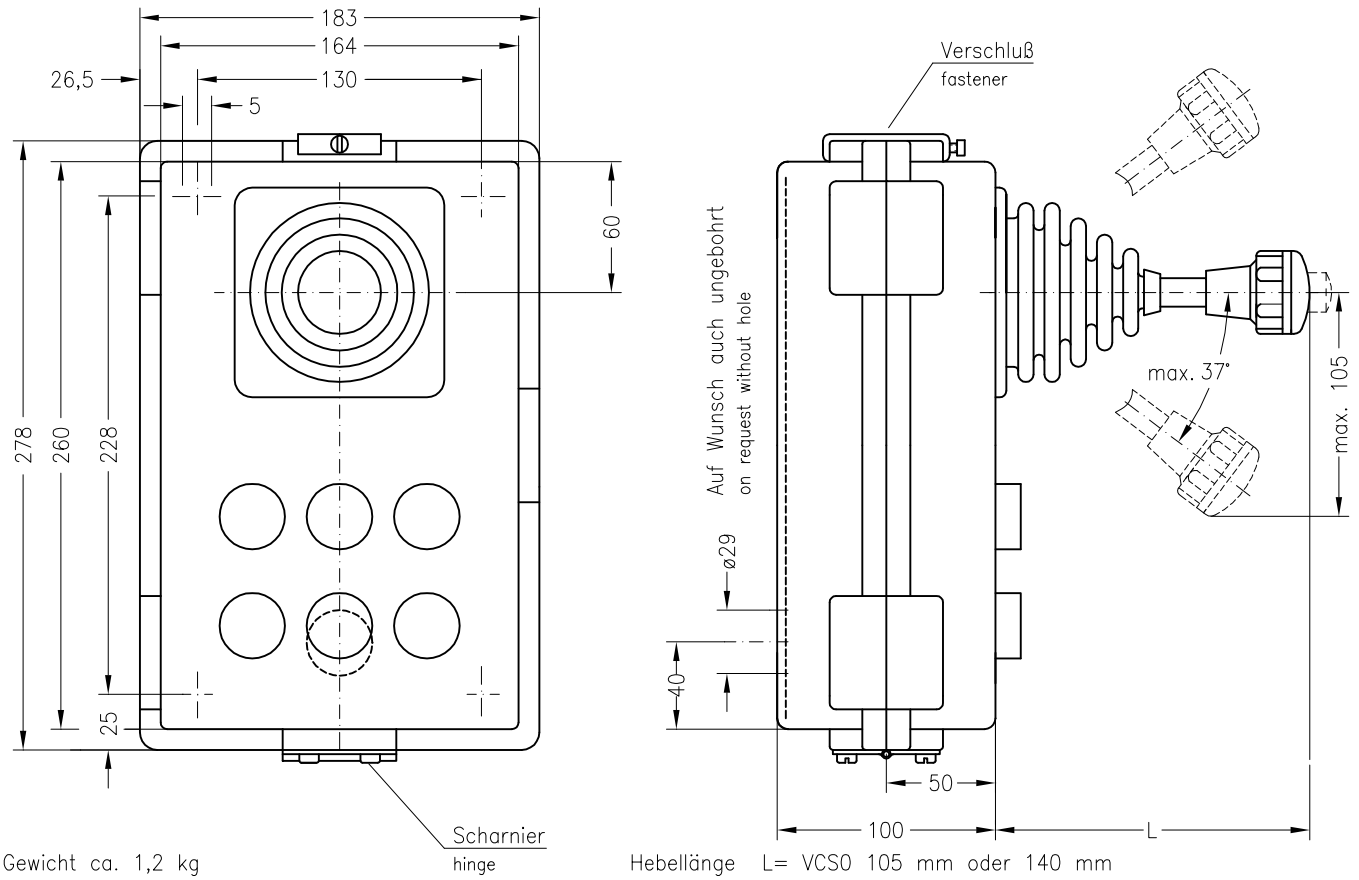

Gewicht ca. 1,2 kg
weight app. 1.2 kg

Hebellänge L= VCS0 105 mm oder 140 mm
shaft length M0 67 mm bzw. 80 mm mit HD

Spohn+Burkhardt
Elektrotechnische Fabrik Blaubeuren

Mauergasse 5
89143 BLAUBEUREN
GERMANY

Tel. +49 7344 171-0 info@spobu.de
Fax +49 7344 171-99 www.spobu.de

Typ CS1S...
mit Stulpenhaltering
weitere Griffe siehe 3/...
type with rubber boot holder
other handles see 3/..

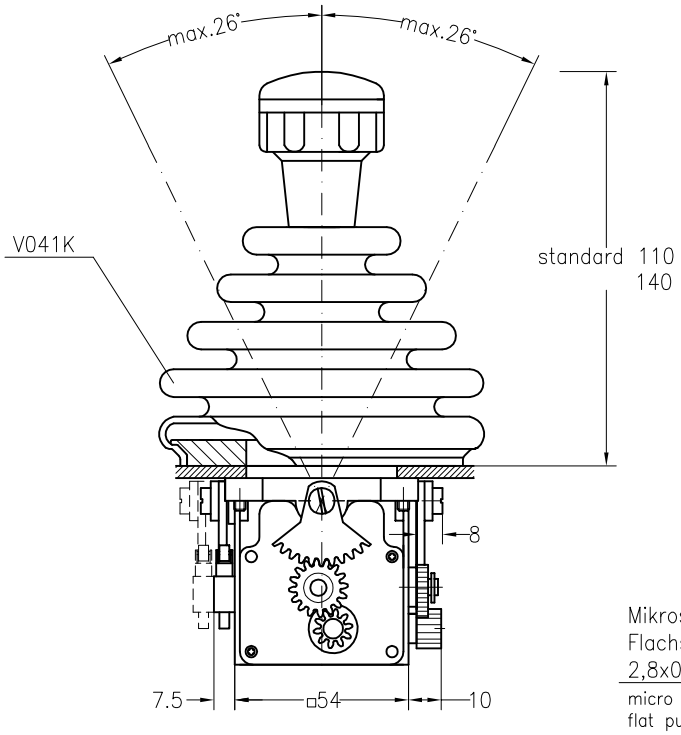

Typ CS172...
mit Rosette 72x72 (nicht beschriftbar)
weitere Griffe siehe 3/...
type with escutcheon plate 72x72 (no engraving possible)
other handles see 3/...

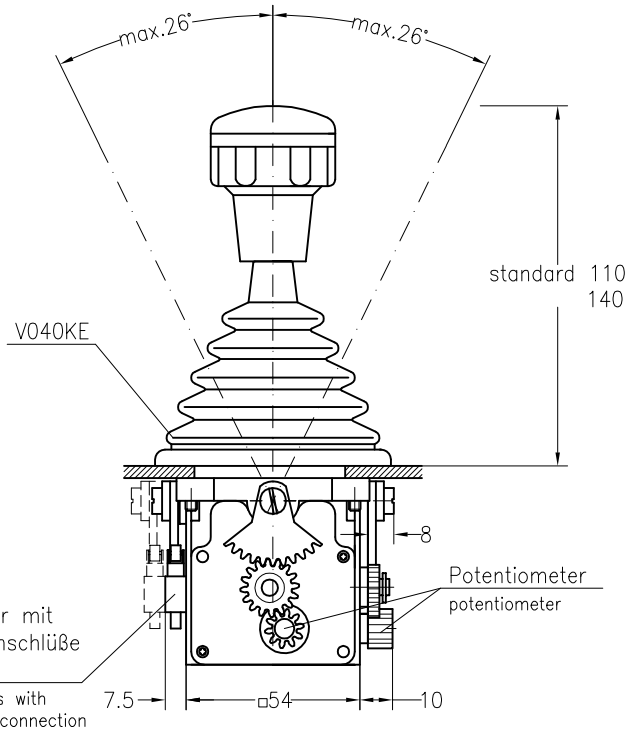

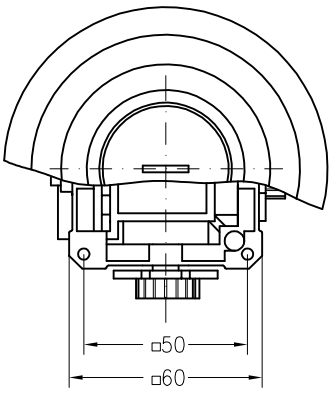

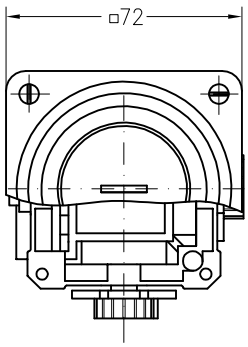

Bohrungen in der
Befestigungswand
mounting dimensions

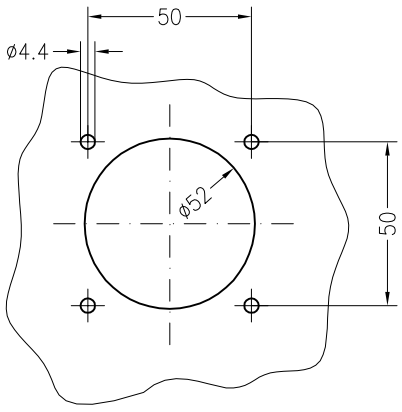

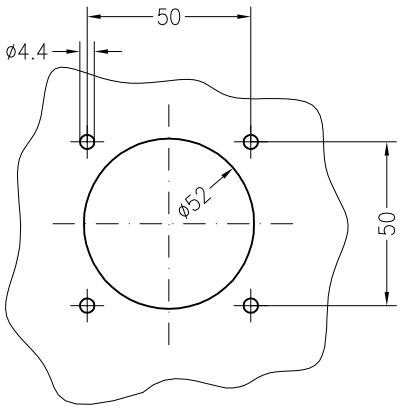

Spohn+Burkhardt
Elektrotechnische Fabrik Blaubeuren

Mauergasse 5
89143 BLAUBEUREN
GERMANY

Tel. +49 7344 171-0 info@spobu.de
Fax +49 7344 171-99 www.spobu.de

Typ CS1G...
gekapselt IP54
für frontseitigen Einbau
type enclosed IP54
mounting in front side

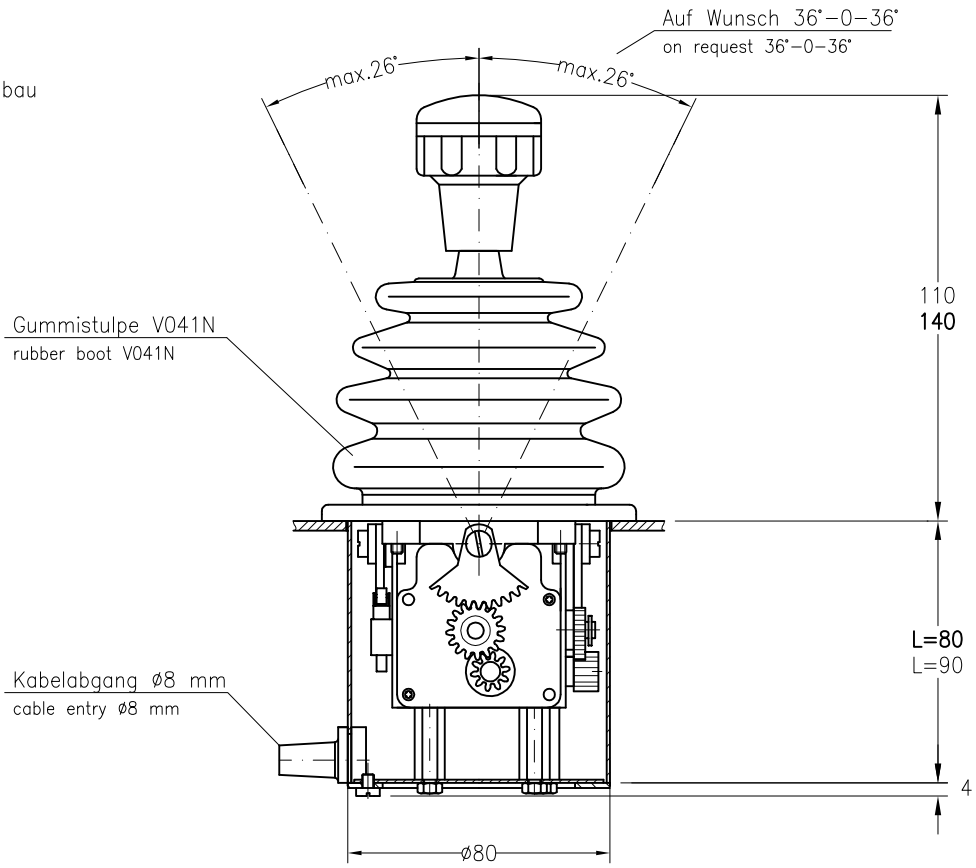

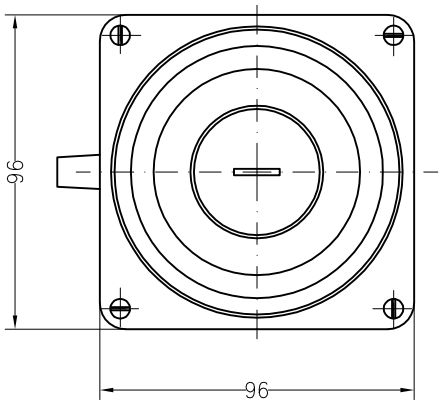

Einbauöffnung:
mounting dimensions

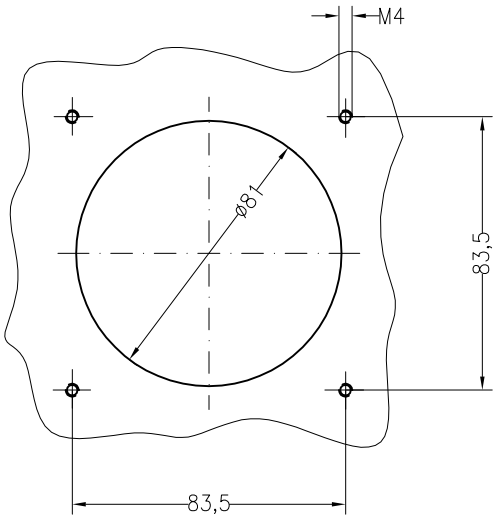

Spohn+Burkhardt
Elektrotechnische Fabrik Blaubeuren

Mauergasse 5
89143 BLAUBEUREN
GERMANY

Tel. +49 7344 171-0 info@spobu.de
Fax +49 7344 171-99 www.spobu.de

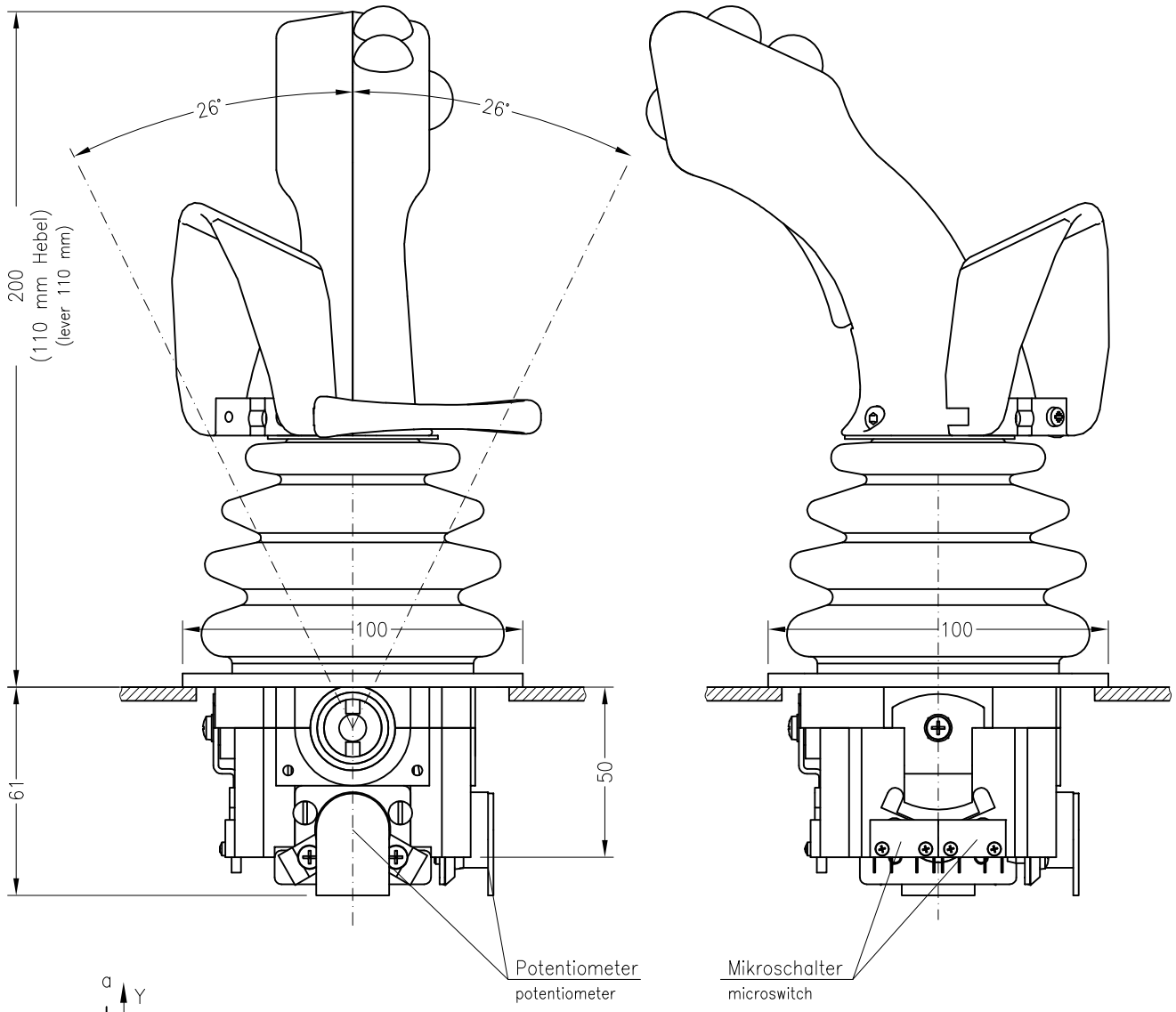

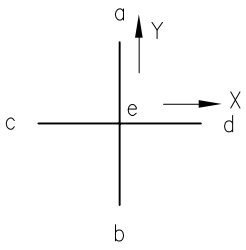

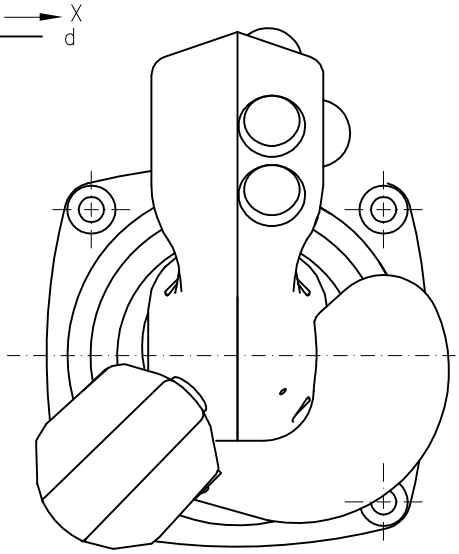

Einbauöffnung
mounting dimensions

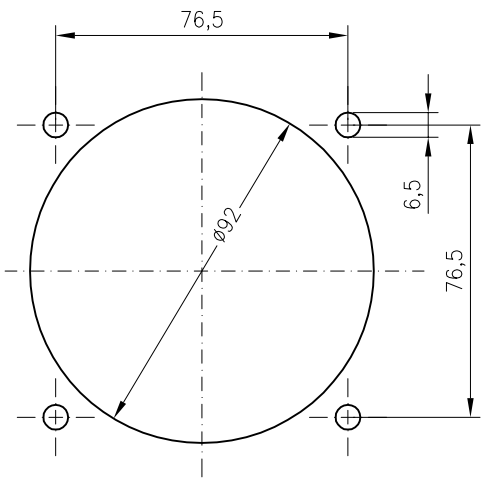

Spohn+Burkhardt
Elektrotechnische Fabrik Blaubeuren

Mauergasse 5
89143 BLAUBEUREN
GERMANY

Tel. +49 7344 171-0 info@spobu.de
Fax +49 7344 171-99 www.spobu.de

Meisterschalter VNS0, stahlgekapselt IP54, mit Scharnierdeckel
Controllers VNS0 steel enclosure IP54, with hinged cover

List 7 / 2014
M 9/10

Typ VNS0–LF–G
type

NS0–LF––GG

Lackierung RAL 7032 kieselgrau
color RAL 7032 pebble grey

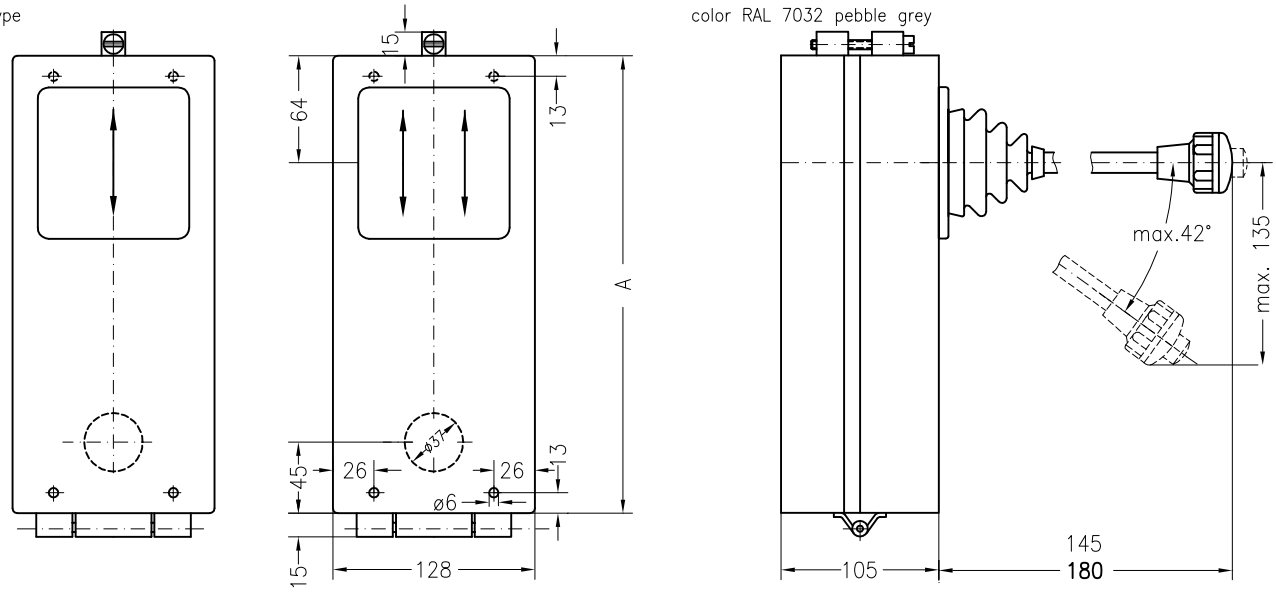

Typ type		MAß A dimension A	Gewicht weight	Schaltrichtungsbezeichnung
VNS04 LF–G		195	3–6 kg	linke Hand left: 1 L 2 · rechte Hand right: 5 R 6 · linke Hand left: 1 3 2 4 · rechte Hand right: 5 7 6 8
VNS06 LF–G	NS06 LF––GG	290		
VNS09 LF–G	NS09 LF––GG	350		

circuit direction and engraving code

Typ VNS0–LF––H
type

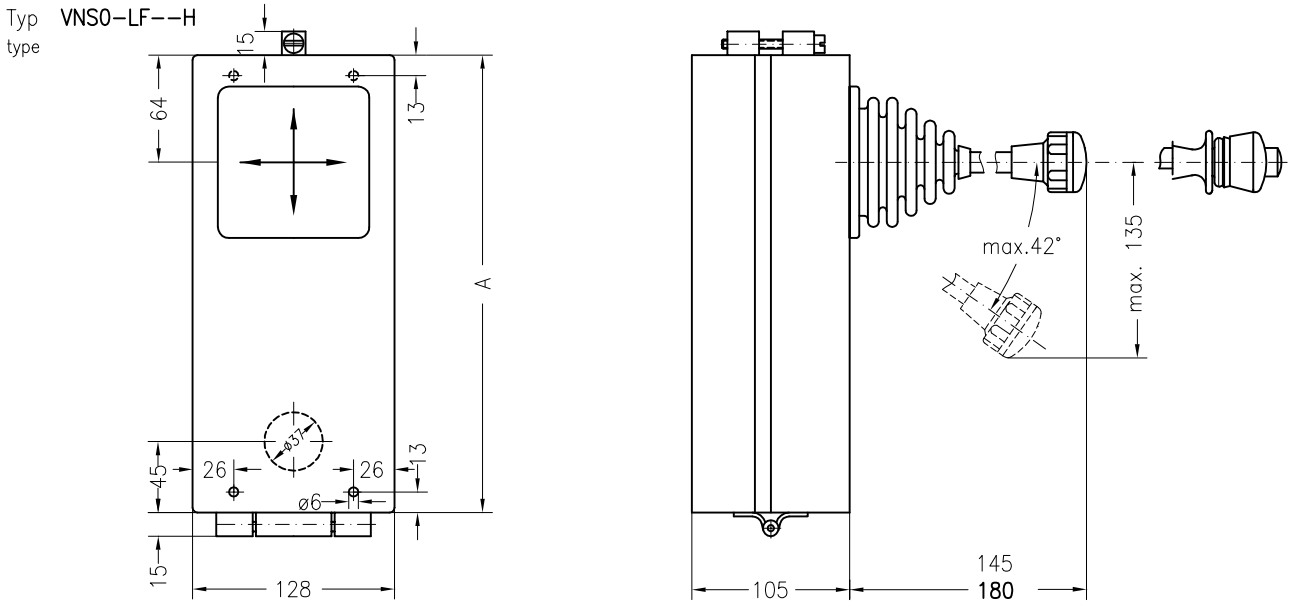

Typ type		MAß A dimension A	Gewicht weight	Schaltrichtungsbezeichnung
VNS04 LF––H		195	3–6 kg	linke Hand left: 1 3 L 4 2 · rechte Hand right: 5 7 R 8 6
VNS06 LF––H		290		
VNS09 LF––H		350		

circuit direction and engraving code

Spohn + Burkhardt
Elektrotechnische Fabrik Blaubeuren

Mauergasse 5
89143 BLAUBEUREN
GERMANY

Tel. +49 7344 171-0 info@spobu.de
Fax +49 7344 171-99 www.spobu.de

Typ NSO––SFA R
type

siehe Seite 9/12
see sheet 9/12

Anordnung – nur erforderlich bei unsymmetrischer Abwicklung
arrangement – important if the circuit isn't symmetrical

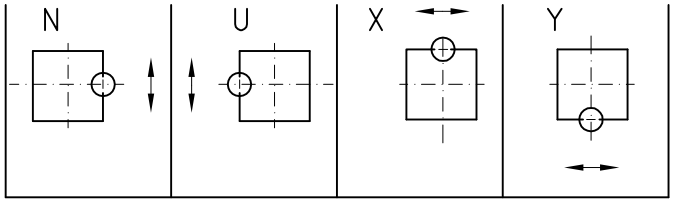

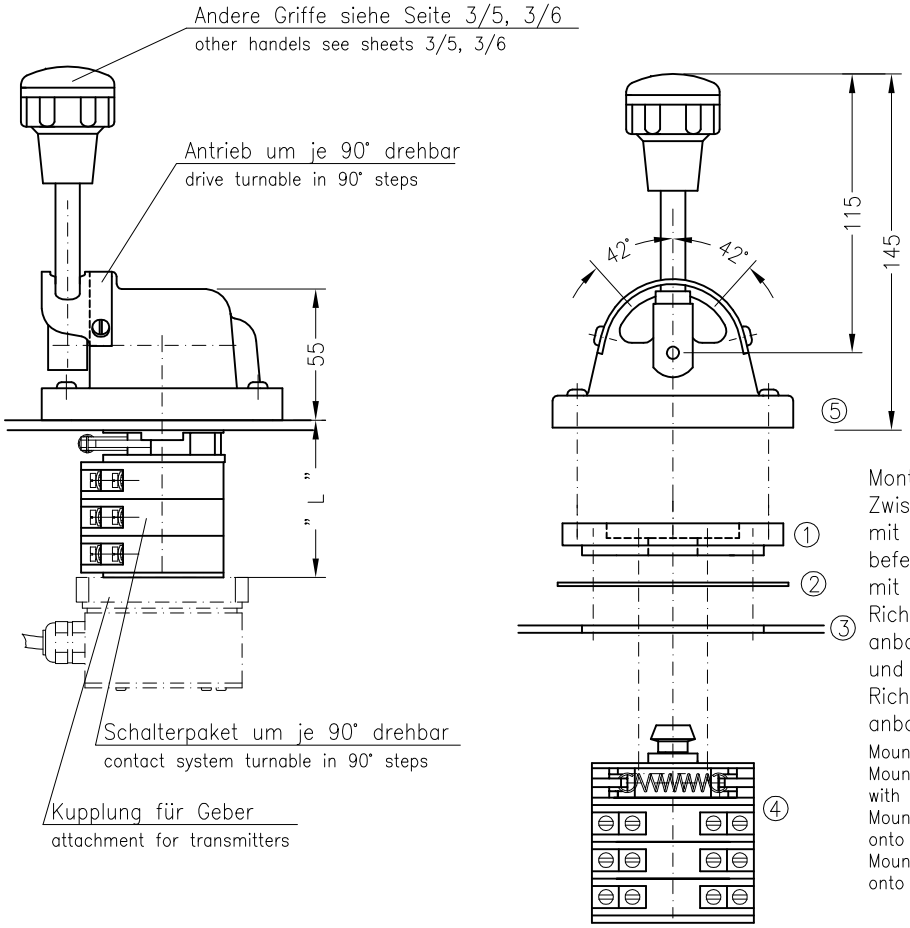

Schutzart IP56 frontseitig
degree of protection IP56

Montage:
Zwischenplatte ① und Dichtung ② mit 4 Schrauben M5 am Gehäuse ③ befestigen , Schalterpaket ④ mit 4 Schrauben in der gewünschten Richtung an der Zwischenplatte ① anbauen. Antrieb ⑤ mit 4 Schrauben und Dichtungen in gewünschter Richtung an Zwischenplatte ① anbauen.

Mounting:
Mount atachement plate ① and sealing ② with 4 screws M5 at the housing ③.
Mount the contact system ④ with 4 screws onto the attachement plate ①.
Mount the drive ⑤ with 4 screws onto the attachement plate ①.

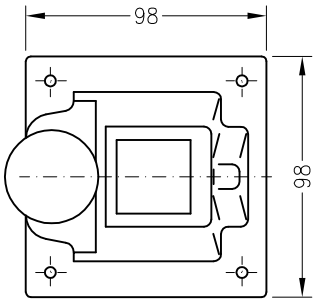

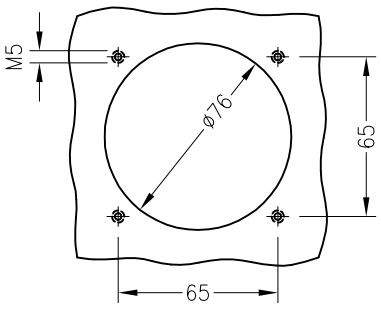

Gewicht:
Antriebsblock ~1,2 kg
je Doppelkontakt ~0,1 kg

weight:
drive ~1,2 kg
each double contact ~0,1 kg

Anzahl Doppelkontaktelemente numbers of double contact blocks	1	2	3	4	5	6	7	8	9	10
Länge " L " length	40	55	70	85	100	115	130	145	160	175

Spohn+Burkhardt
Elektrotechnische Fabrik Blaubeuren

Mauergasse 5
89143 BLAUBEUREN
GERMANY

Tel. +49 7344 171-0 info@spobu.de
Fax +49 7344 171-99 www.spobu.de

Darstellung mit UGD–Griff (option)
drawing with UGD–handle (option)

Weitere Griffe siehe Blatt
more handles see sheet
3/2, 3/3, 3/5,
3/6, 3/8, 3/9, 3/10, 3/11

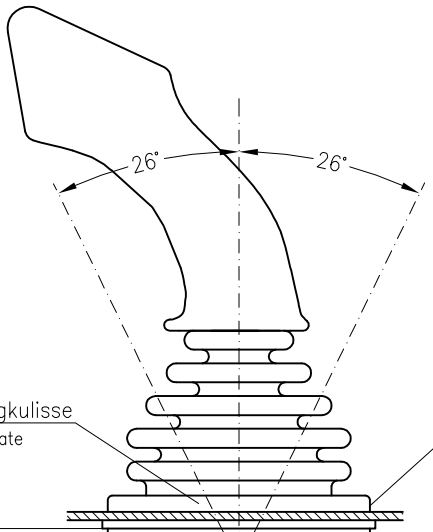

mit Anschlagkulisse
with limiting gate

Rosette 96x96 mm Alu, schwarz
escutcheon plate 96x96 mm alu, black

Gehäuse nur bei Lieferung mit Elektronik, sonst offen
casing only when delivered with electronics otherwise open

Gehäusetiefe bei:
– CANbus (ESS100/101)
– Profibus (ESS094)
– Strom– und Spannungs–ausgang (ESS089/098)

housing depth when delivered with
– CANbus (ESS100/101)
– Profibus (ESS094)
– current and voltage output (ESS089/098)

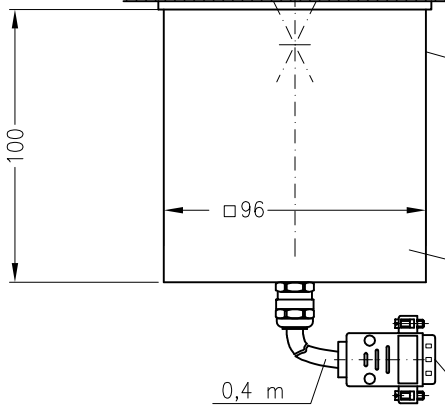

Elektronik–Karte
electronic card

Bei Ausführung mit Elektronik auf D–Sub Stecker verdrahtet
wired onto D–Sub plug when version is with electronics

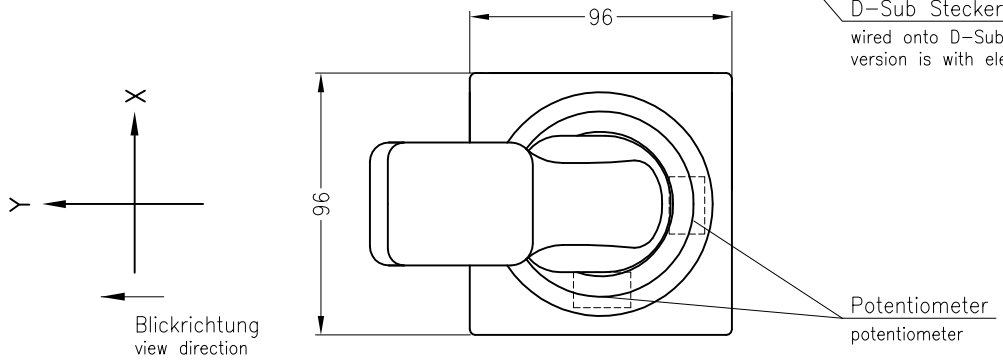

Blickrichtung
view direction

Potentiometer
potentiometer

Einbauöffnung:
mounting dimensions

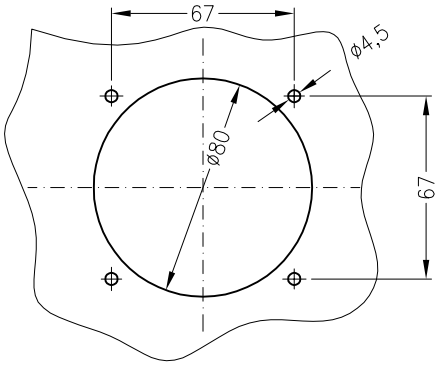

Spohn+Burkhardt
Elektrotechnische Fabrik Blaubeuren

Mauergasse 5
89143 BLAUBEUREN
GERMANY

Tel. +49 7344 171-0 info@spobu.de
Fax +49 7344 171-99 www.spobu.de

Meisterschalter VNS0–FE, VNS0–FV für Frontbefestigung
Controllers VNS0–FE, VNS0–FV for front mounted

List 7 / 2014
M 9/2A

Typ VNS0–F–E
type

Antrieb E
drive E

siehe Seite 9/2
see sheet 9/2

Einbauten im Hebel
siehe Seite 2/1...
additionals
see sheet 2/1...

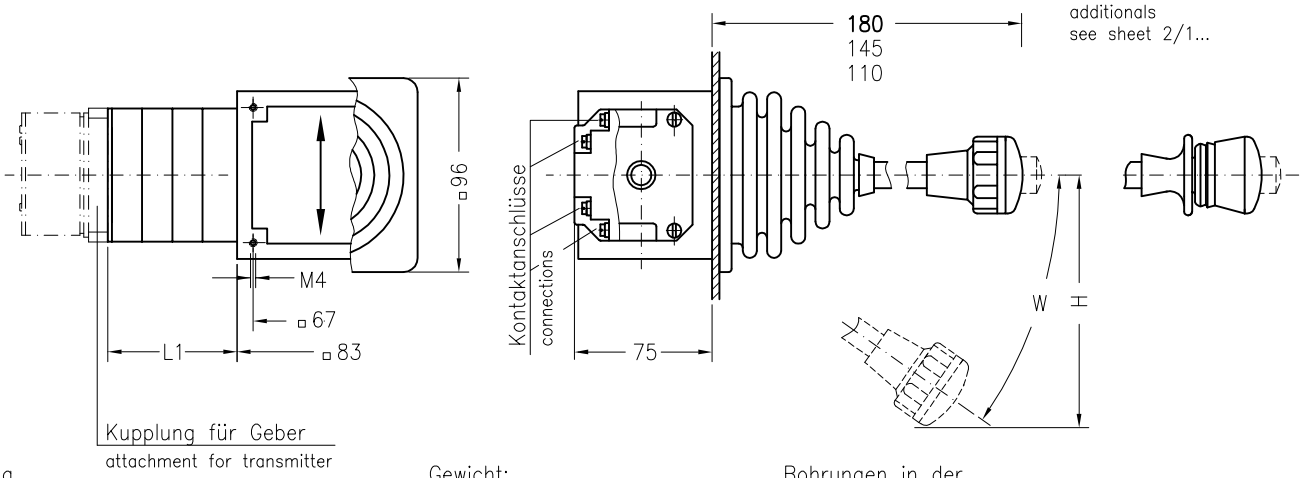

Anordnung
arrangement

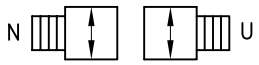

Gewicht:
Antriebsblock ~0,9 kg
je Doppelkontakt ~0,08 kg
weight:
drive ~0,9 kg
each double contact ~0,08 kg

Bohrungen in der Befestigungswand
mounting dimensions

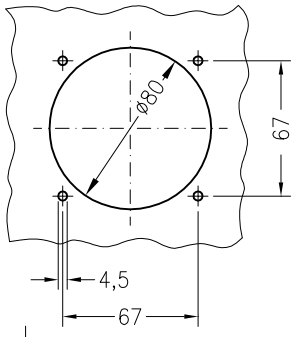

Typ VNS0–F–V
type

Antrieb V
drive V

siehe Seite 9/2
see sheet 9/2

Blickrichtung
view direction

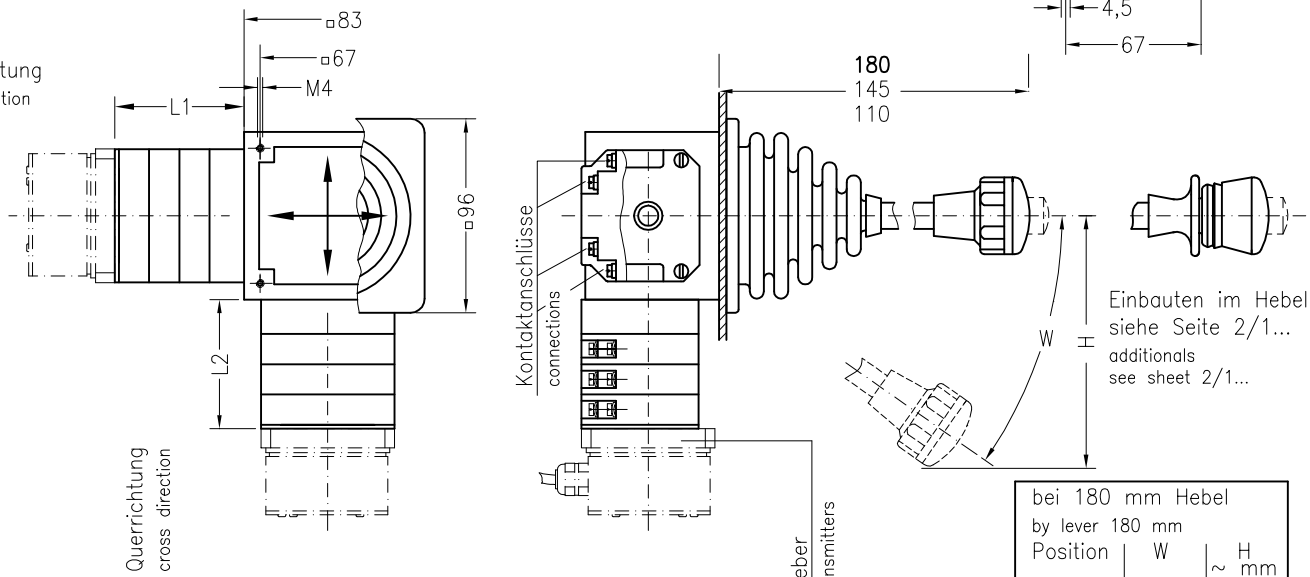

Anordnung
arrangement

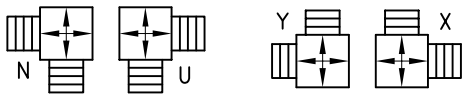

Gewicht:
Antriebsblock ~1,2 kg
je Doppelkontakt ~0,08 kg
weight:
drive ~1,2 kg
each double contact ~0,08 kg

bei 180 mm Hebel by lever 180 mm Position	W	~ H mm
1–0–1	13°	70
2–0–2	21°	100
3–0–3	30°	135
4–0–4	29°	130
5–0–5	35°	150
6–0–6	36°	155
7–0–7	38°	160

Maß L1 oder L2 (mm) dimension L1 or L2 (mm)	35	50	65	80	95	110	125	140	155	170
Anzahl Doppelkontaktelemente number of double contact elements	1	2	3	4	5	6	7	8	9	10

Spohn + Burkhardt
Elektrotechnische Fabrik Blaubeuren

Mauergasse 5
89143 BLAUBEUREN
GERMANY

Tel. +49 7344 171-0 info@spobu.de
Fax +49 7344 171-99 www.spobu.de

Meisterschalter VNS0, 16 Amp. für Bodenbefestigung
Controllers VNS0, 16 Amp. for base mounting

List 7 / 2014
M 9/2B

Anordnungsbezeichnung: arrangement description:

Blickrichtung / view direction	VNS0–E linke Hand / left hand	VNS0–E rechte Hand / right hand	VNS0–V linke Hand / left hand	VNS0–V rechte Hand / right hand	VNS0–V linke Hand / left hand	VNS0–V rechte Hand / right hand
	N	U	N	U	U	N
Quer / cross direction	U	N	Y	X	X	Y

Schaltrichtungsbezeichnung switch direction arrangement

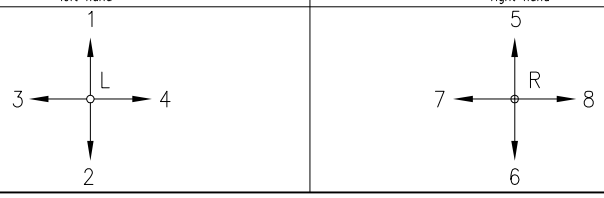

Bohrungen in der Abdeckung bores on cover

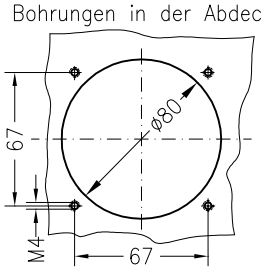

Bohrungen in der Rückwand bores back wall

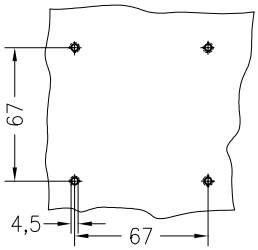

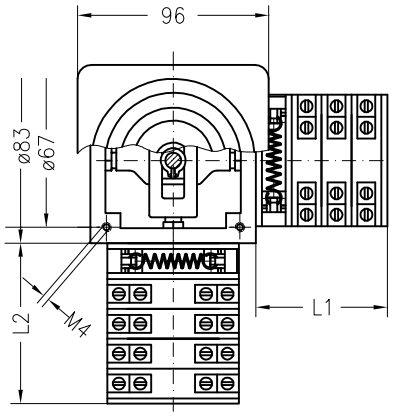

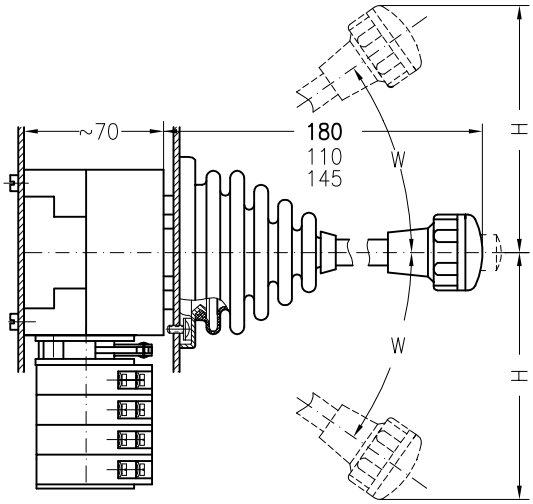

Anzahl Doppelkontaktelemente / number of double contact elements	1 ( ) ohne Rastung / without notches	2 Rastung / notches	3	4	5	6	7	8	9	10
L1 L2 L3	35 (22)	50 (37)	65	80	95	110	125	140	155	170

Hebelausschlag (Hebel 180 mm) lever deflection (lever 180 mm)								
Stellungen steps	H	W	Stellungen steps	H	W	Stellungen steps	H	W
1–0–1	70	13°	3–0–3	135	30°	5–0–5	150	35°
2–0–2	100	21°	4–0–4	130	29°	6–0–6	155	36°

Antriebsart: drive arrangement: **E**

Typ VNS0 N U T L1 E(R)

Gew.: Antriebsblock: weight: drive block 0,9 kg
je Doppelkontakt–element: each double contact element 0,08 kg

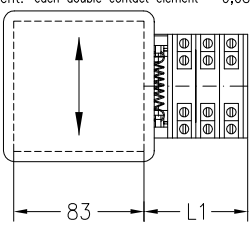

V

VNS0 T T N U X Y V(R) L1 L2

1200 g

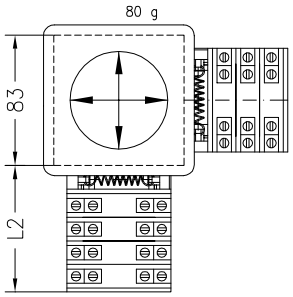

G

VNS0 T G(R) L1

1200 g

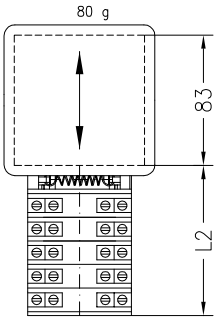

H

VNS0 T T H(R) L1 L2

1450 g

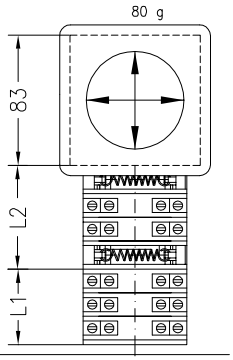

M

VNS0 T T M(R) L1 L2

Gew.: Antriebsblock: weight: drive block 1,4 kg
je Doppelkontakt–element: each double contact element 0,08 kg

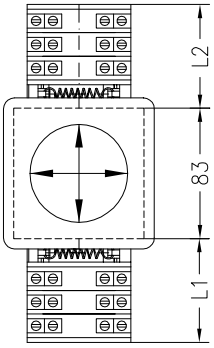

GG

NS0 T T GG(R) L1 L2

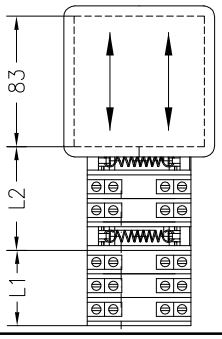

Spohn + Burkhardt
Elektrotechnische Fabrik Blaubeuren

Mauergasse 5
89143 BLAUBEUREN
GERMANY

Tel. +49 7344 171-0 info@spobu.de
Fax +49 7344 171-99 www.spobu.de

Meisterschalter NNS0–FE, NNS0–FV
für Frontbefestigung, schwere Ausführung
Controller NNS0–FE, NNS0–FV front mounted, heavy version

List 7 / 2014
M 9/2N

Typ NNS0–F–E
type

Antrieb E
drive E

siehe Seite 9/2N
see sheet 9/2N

Einbauten im Hebel
siehe Seite 2/1C
additionals
see sheet 2/1C

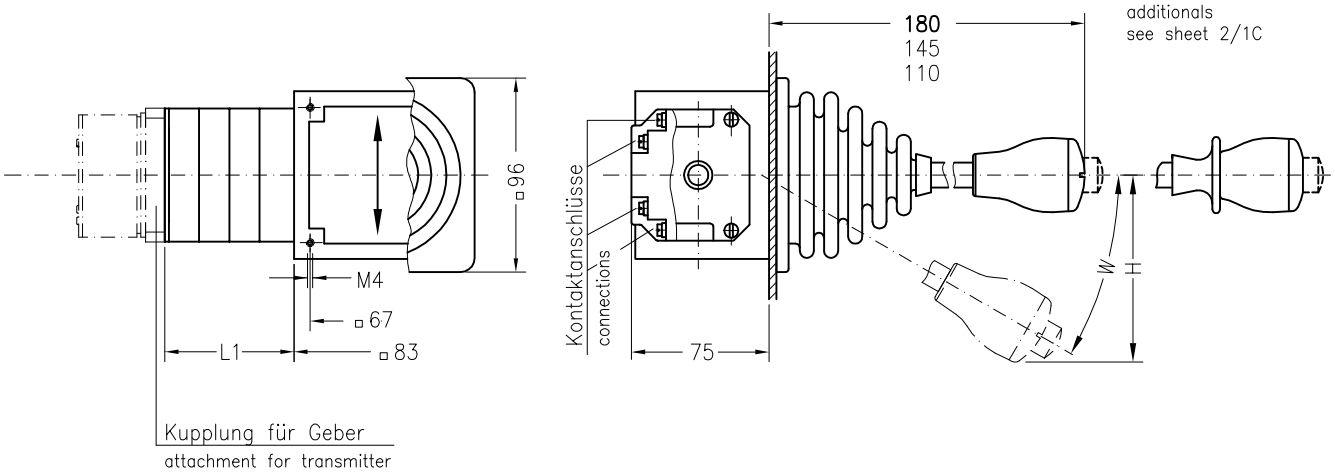

Anordnung
arrangement

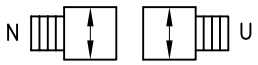

Gewicht:
Antriebsblock ~1,1 kg
je Doppelkontakt ~0,08 kg
weight:
drive ~1,1 kg
each double contact ~0,08 kg

Bohrungen in der Befestigungswand
mounting dimensions

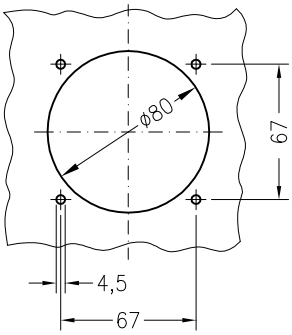

Typ NNS0–F–V
type

Antrieb V
drive V

siehe Seite 9/2N
see sheet 9/2N

Blickrichtung
view direction

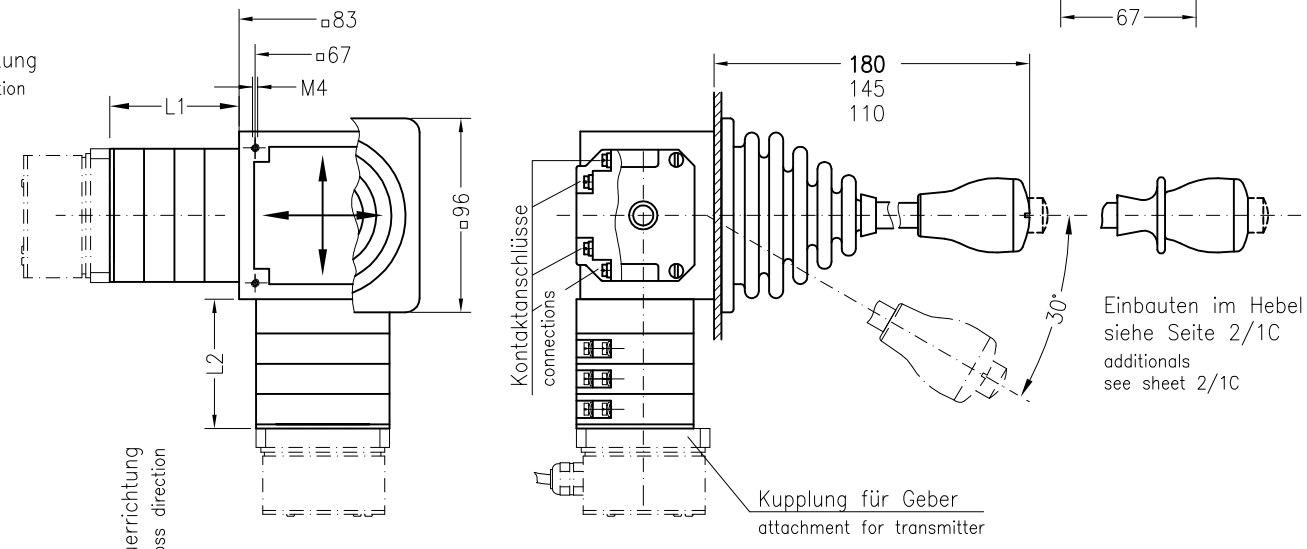

Anordnung
arrangement

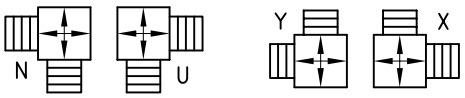

Gewicht:
Antriebsblock ~1,1 kg
je Doppelkontakt ~0,08 kg
weight:
drive ~1,1 kg
each double contact ~0,08 kg

Maß L1 oder L2 (mm) dimension L1 or L2 (mm)	35	50	65	80	95	110	125	140	155	170
Anzahl Doppelkontaktelemente number of double contact elements	1	2	3	4	5	6	7	8	9	10

Spohn + Burkhardt
Elektrotechnische Fabrik Blaubeuren

Mauergasse 5
89143 BLAUBEUREN
GERMANY

Tel. +49 7344 171-0 info@spobu.de
Fax +49 7344 171-99 www.spobu.de

Meisterschalter VNS0–FG, VNS0–FH, VNS0–FM für Frontbefestigung
Controllers VNS0–FG, VNS0–FH, VNS0–FM for front mounted

List 7 / 2014
M 9/3

Typ VNS0–FG
type

Antrieb G
siehe Seite 9/3
drive G
see sheet 9/3

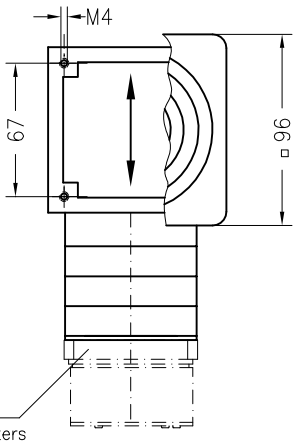

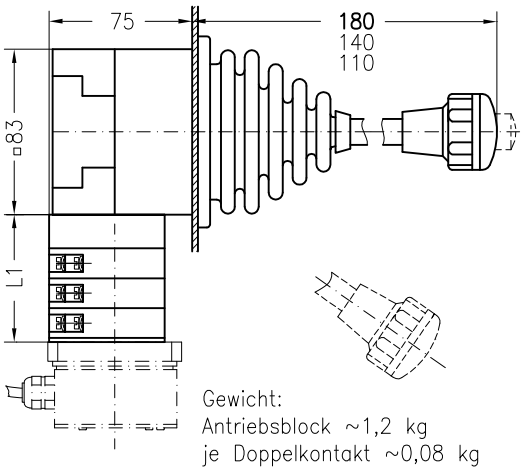

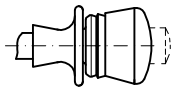

Einbauten im Hebel
siehe Seite 2/1...
additionals
see sheet 2/1...

Gewicht:
Antriebsblock ~1,2 kg
je Doppelkontakt ~0,08 kg
weight:
drive ~1,2 kg
each double contact ~0,08 kg

Typ VNS0––FH
type

Antrieb H
siehe Seite 9/3
drive H
see sheet 9/3

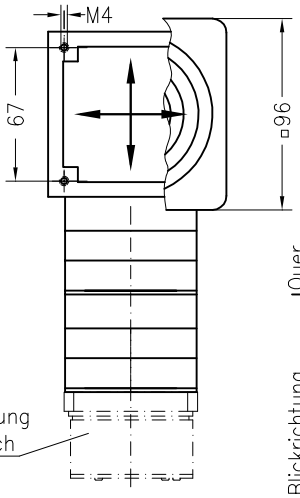

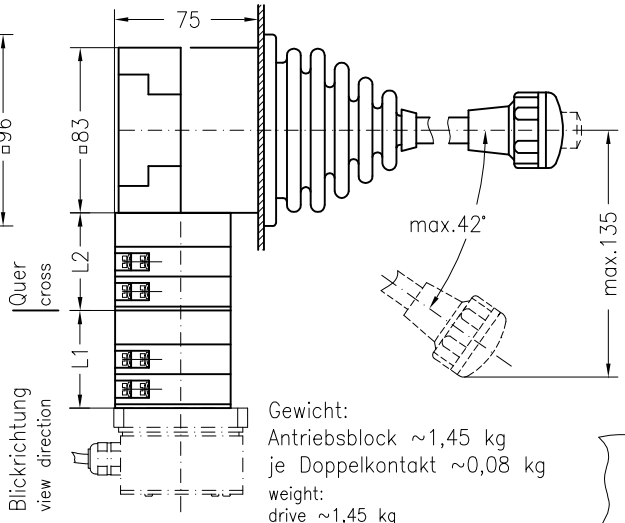

Gewicht:
Antriebsblock ~1,45 kg
je Doppelkontakt ~0,08 kg
weight:
drive ~1,45 kg
each double contact ~0,08 kg

Bohrungen in der
Befestigungswand
mounting dimensions

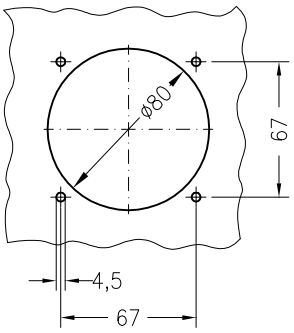

Typ VNS0––FM
type

Antrieb M
siehe Seite 9/3
drive H
see sheet 9/3

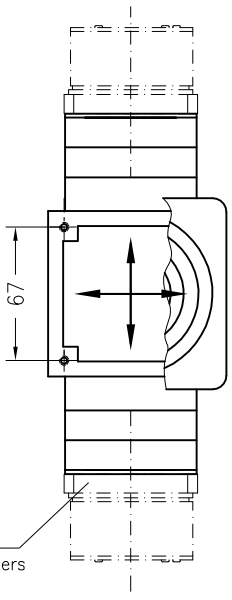

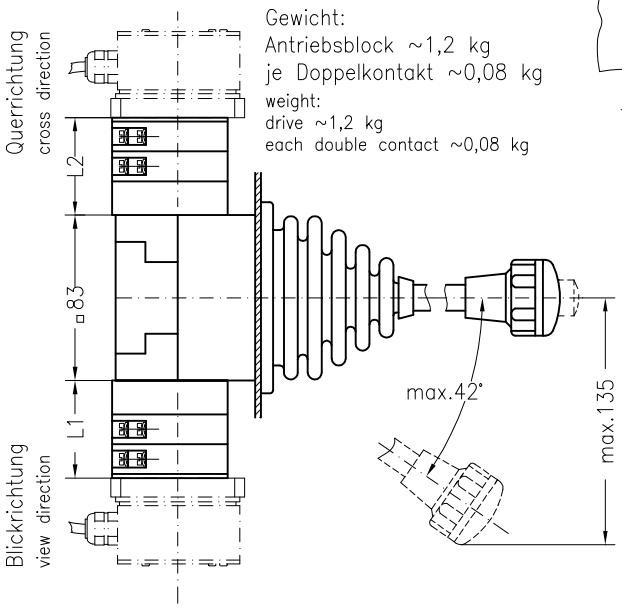

Gewicht:
Antriebsblock ~1,2 kg
je Doppelkontakt ~0,08 kg
weight:
drive ~1,2 kg
each double contact ~0,08 kg

Einbauten im Hebel
siehe Seite 2/1...
additionals
see sheet 2/1...

Maß L1 oder L2 (mm) dimension L1 or L2 (mm)	35	50	65	80	95	110	125	140	155	170
Anzahl Doppelkontaktelemente number of double contact elements	1	2	3	4	5	6	7	8	9	10

Spohn+Burkhardt
Elektrotechnische Fabrik Blaubeuren

Mauergasse 5
89143 BLAUBEUREN
GERMANY

Tel. +49 7344 171-0 info@spobu.de
Fax +49 7344 171-99 www.spobu.de

Meisterschalter NNS0–FG, NNS0–FM
für Frontbefestigung, schwere Ausführung
Controller NNS0–FG, NNS0–FM front mounted, heavy version

List 7 / 2014
M 9/3N

Typ NNS0–FG
type

Antrieb G
drive G

siehe Seite 9/3N
see sheet 9/3N

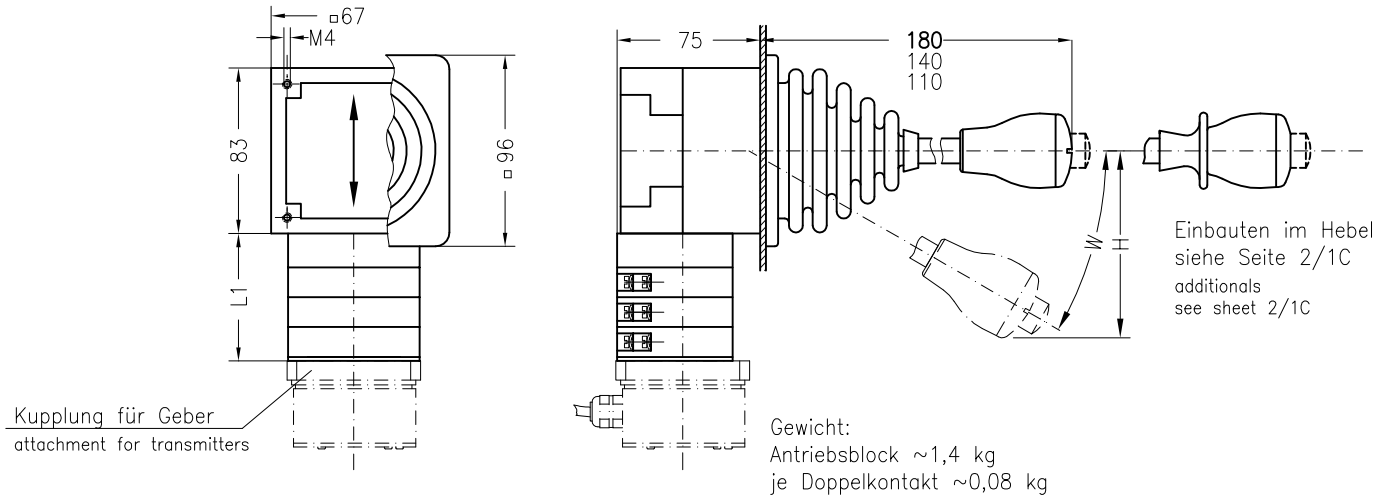

Gewicht:
Antriebsblock ~1,4 kg
je Doppelkontakt ~0,08 kg
weight:
drive ~1,4 kg
each double contact ~0,08 kg

Bohrungen in der
Befestigungswand
mounting dimensions

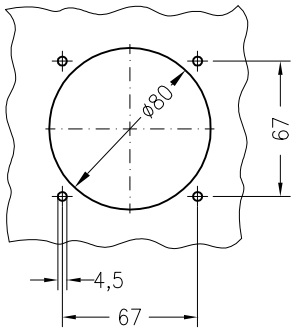

Typ NNS0–FM
type

Antrieb M
drive M

siehe Seite 9/3N
see sheet 9/3N

Gewicht:
Antriebsblock ~1,4 kg
je Doppelkontakt ~0,08 kg
weight:
drive ~1,4 kg
each double contact ~0,08 kg

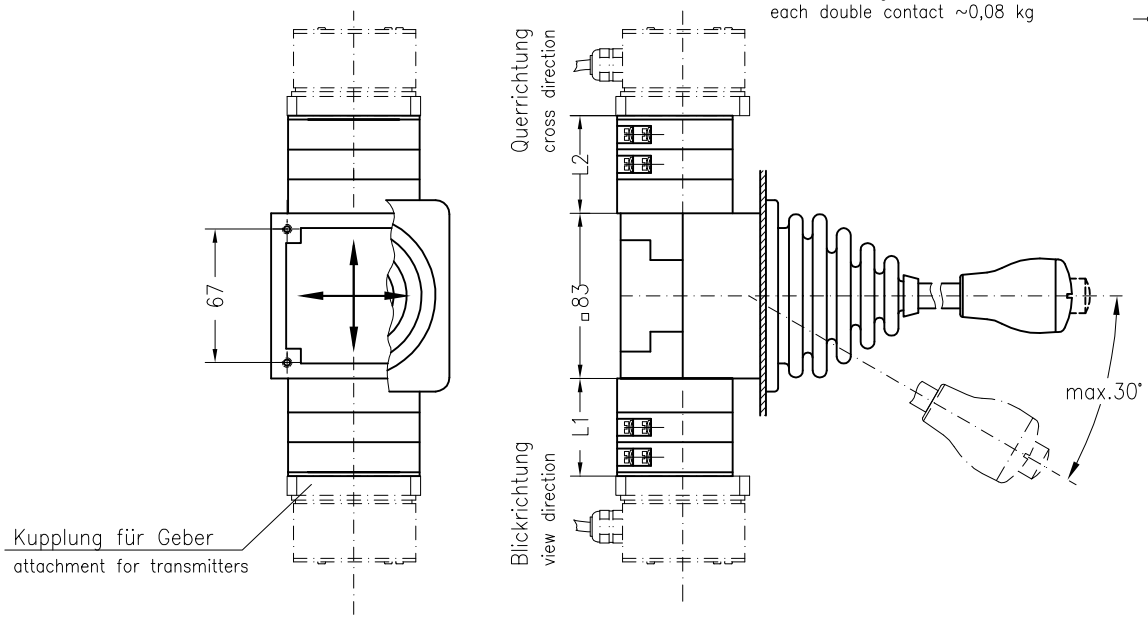

Maß L1 oder L2 (mm) dimension L1 or L2 (mm)	35	50	65	80	95	110	125	140	155	170
Anzahl Doppelkontaktelemente number of double contact elements	1	2	3	4	5	6	7	8	9	10

Spohn+Burkhardt
Elektrotechnische Fabrik Blaubeuren

Mauergasse 5
89143 BLAUBEUREN
GERMANY

Tel. +49 7344 171-0 info@spobu.de
Fax +49 7344 171-99 www.spobu.de

Meisterschalter VNS0–A, VNS0–EA, VNS0–AA für Frontbefestigung
Controllers VNS0–A, VNS0–EA, VNS0–AA for front mounted

List 7 / 2014
M 9/4

Typ VNS0–A
type

Antrieb A
drive A

siehe Seite 9/4
see sheet 9/4

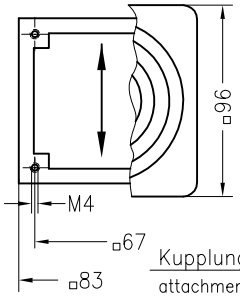

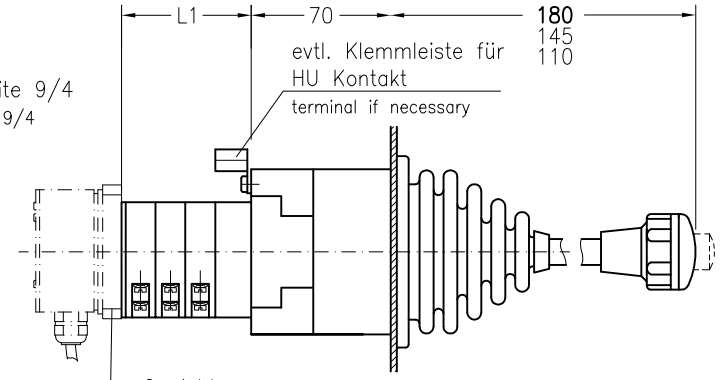

Kupplung für Geber
attachment for transmitters

Gewicht:
Antriebsblock ~1,2 kg
je Doppelkontakt ~0,08 kg
weight:
drive ~1,2 kg
each double contact ~0,08 kg

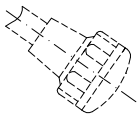

Einbauten im Hebel
siehe Seite 2/1C
additionals
see sheet 2/1C

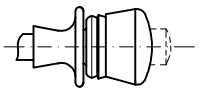

Bohrungen in der
Befestigungswand
mounting dimensions

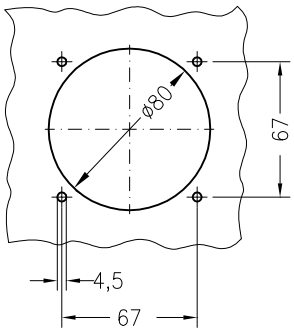

Typ VNS0––EA
type

Antrieb EA
drive EA

siehe Seite 9/4
see sheet 9/4

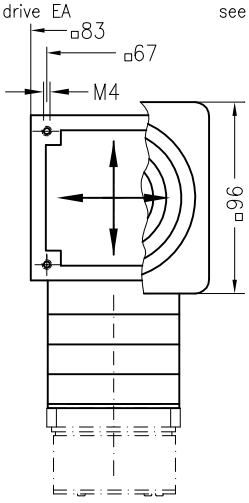

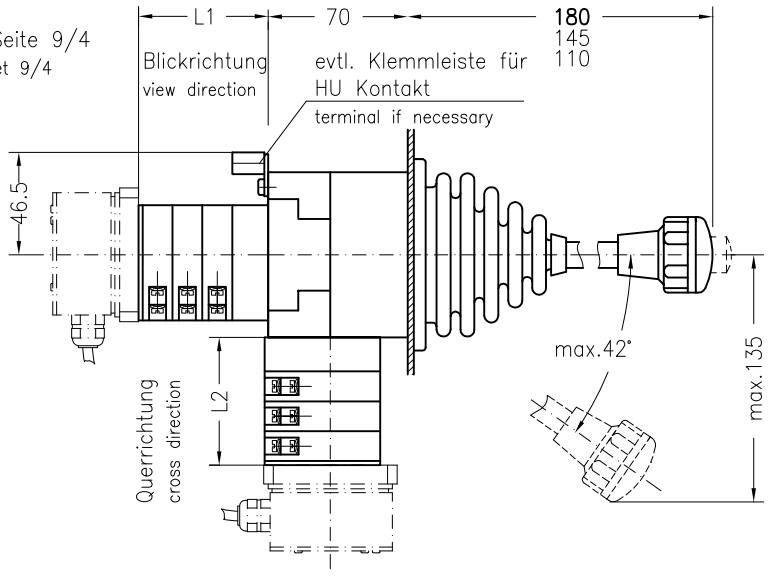

Gewicht:
Antriebsblock ~1,2 kg
je Doppelkontakt ~0,08 kg
weight:
drive ~1,2 kg
each double contact ~0,08 kg

Typ VNS0––AA
type

Antrieb AA
drive AA

siehe Seite 9/4
see sheet 9/4

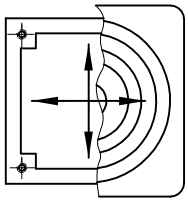

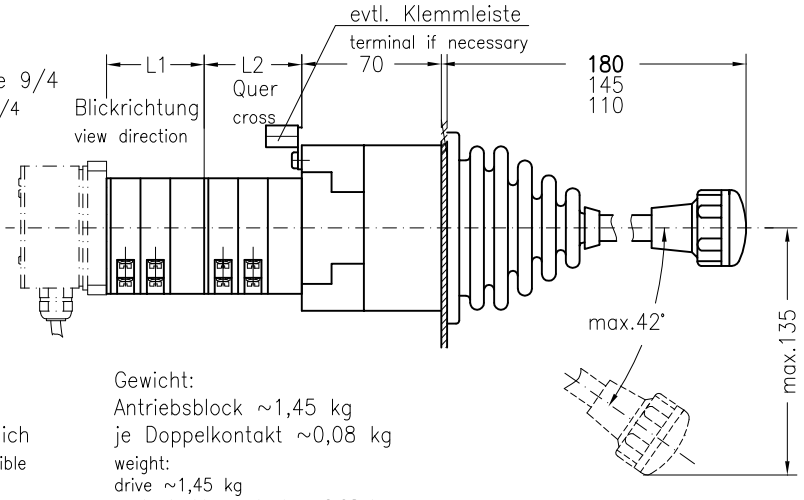

Geber nur in
Blickrichtung möglich
attachment only possible
for view direction

Gewicht:
Antriebsblock ~1,45 kg
je Doppelkontakt ~0,08 kg
weight:
drive ~1,45 kg
each double contact ~ 0,08 kg

Maß L1 oder L2 (mm) dimension L1 or L2 (mm)	35	50	65	80	95	110	125	140	155	170
Anzahl Doppelkontaktelemente number of double contact elements	1	2	3	4	5	6	7	8	9	10

Spohn + Burkhardt
Elektrotechnische Fabrik Blaubeuren

Mauergasse 5
89143 BLAUBEUREN
GERMANY

Tel. +49 7344 171-0 info@spobu.de
Fax +49 7344 171-99 www.spobu.de

Meisterschalter NNS0–A, NNS0–EA, NNS0–AA
für Frontbefestigung, schwere Ausführung
Controller NNS0–A, NNS0–EA, NNS0–AA front mounted, heavy version

List 7 / 2014
M 9/4N

Typ NNS0–A
type
Antrieb A
drive A

siehe Seite 9/4N
see sheet 9/4N

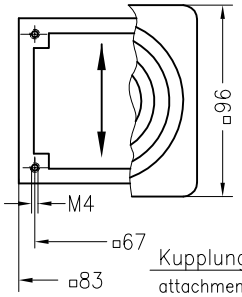

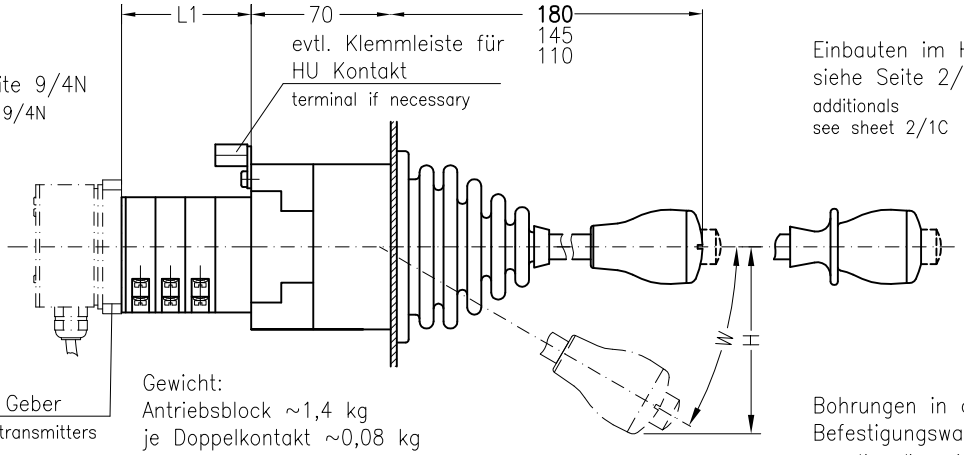

Kupplung für Geber
attachment for transmitters

Gewicht:
Antriebsblock ~1,4 kg
je Doppelkontakt ~0,08 kg
weight:
drive ~1,4 kg
each double contact ~0,08 kg

Einbauten im Hebel
siehe Seite 2/1C
additionals
see sheet 2/1C

Bohrungen in der
Befestigungswand
mounting dimensions

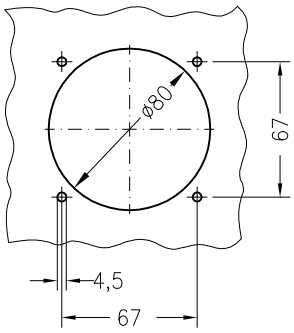

Typ NNS0––EA
type
Antrieb EA
drive EA

siehe Seite 9/4N
see sheet 9/4N

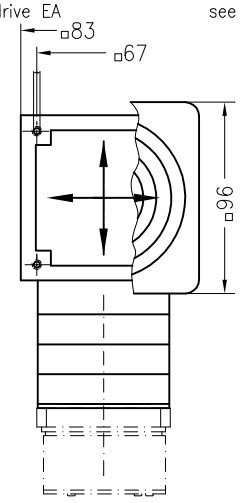

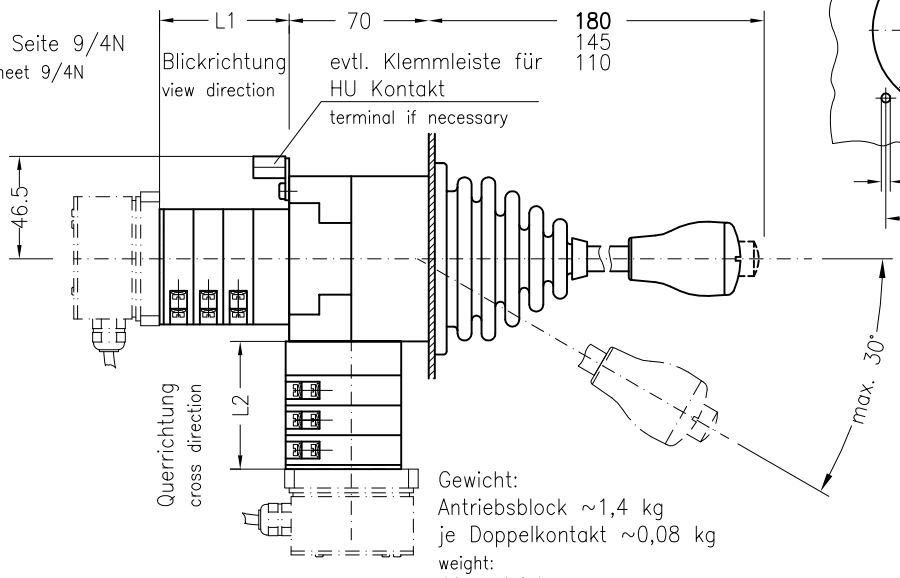

Gewicht:
Antriebsblock ~1,4 kg
je Doppelkontakt ~0,08 kg
weight:
drive ~1,4 kg
each double contact ~0,08 kg

Typ NNS0––AA
type
Antrieb AA
drive AA

siehe Seite 9/4N
see sheet 9/4N

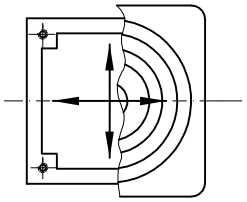

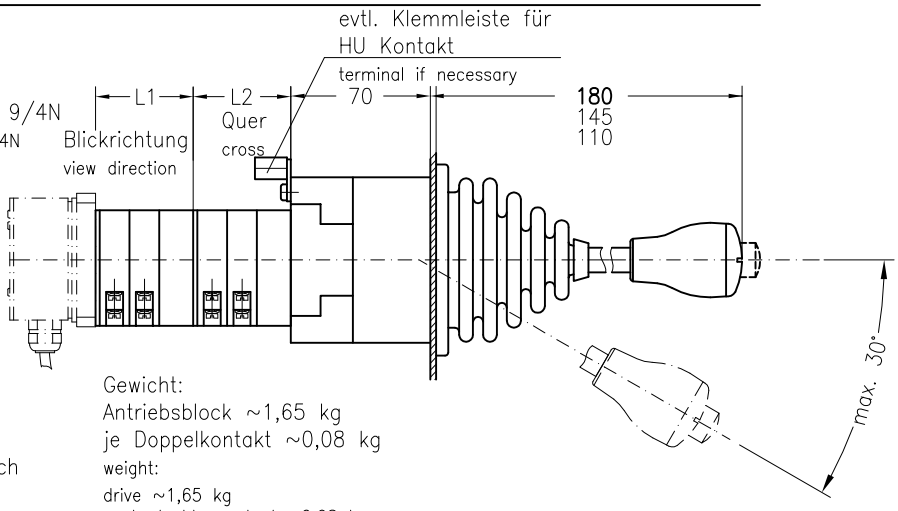

Geber nur in
Blickrichtung möglich
attachment only
for view direction

Gewicht:
Antriebsblock ~1,65 kg
je Doppelkontakt ~0,08 kg
weight:
drive ~1,65 kg
each double contact ~0,08 kg

Maß L1 oder L2 (mm) dimension L1 or L2 (mm)	35	50	65	80	95	110	125	140	155	170
Anzahl Doppelkontaktelemente number of double contact elements	1	2	3	4	5	6	7	8	9	10

Spohn + Burkhardt
Elektrotechnische Fabrik Blaubeuren

Mauergasse 5
89143 BLAUBEUREN
GERMANY

Tel. +49 7344 171-0 info@spobu.de
Fax +49 7344 171-99 www.spobu.de

Meisterschalter NS0 mit Doppelhebel
Controllers NS0 with two handles

List 7 / 2014
M 9/5A

Typ NS0--FGGH
type

Antrieb GG
siehe Seite 9/5
drive GG
see sheet 9/5

Einbauten im Hebel
siehe Seite 2/1...
additionals
see sheet 2/1...

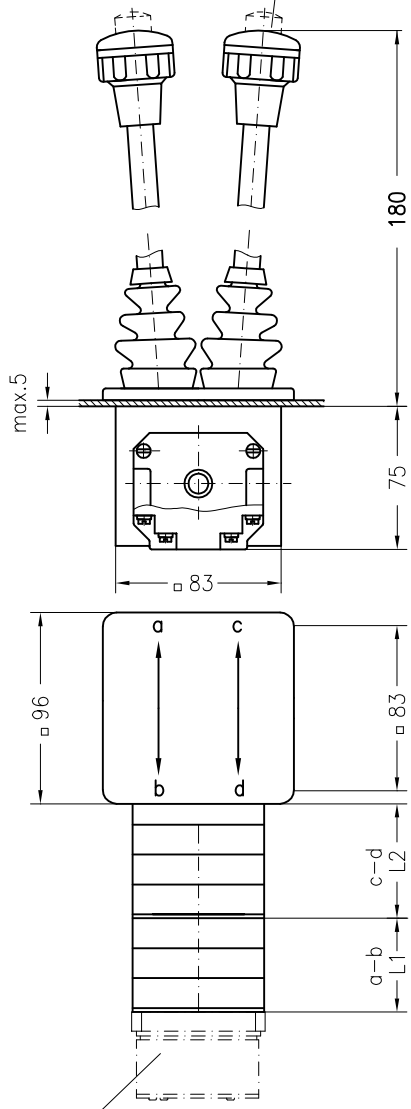

Geber nur für
einen Hebel möglich
attachment for transmitter
only for one handle

Typ NS0--GGAA
type

Antrieb GGA
siehe Seite 9/5
drive GGA
see sheet 9/5

Einbauten im Hebel
siehe Seite 2/1...
additionals
see sheet 2/1...

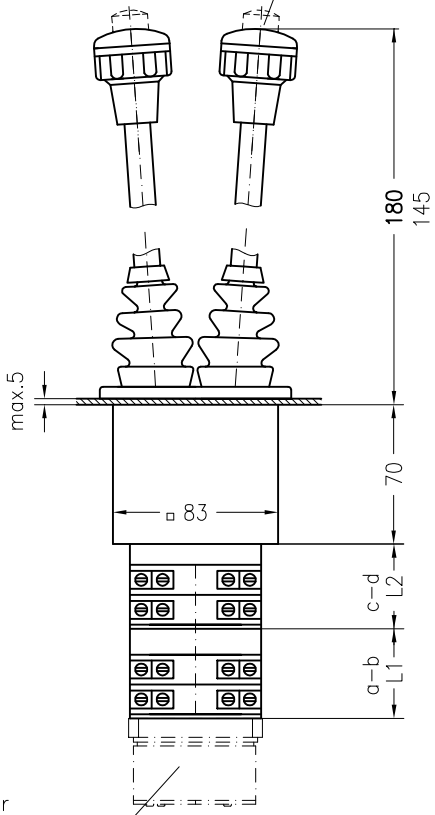

Geber nur für
einen Hebel möglich
attachment for transmitter
only for one handle

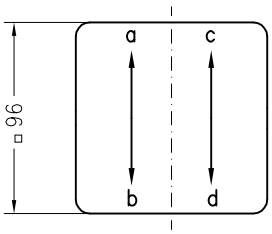

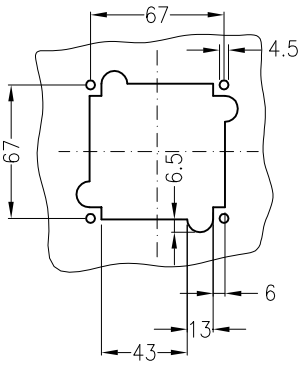

Bohrungen in der
Befestigungswand
mounting dimensions

Gewicht:
Antriebsblock ~1,6 kg
je Doppelkontakt ~0,08 kg
weight:
drive ~1,6 kg
each double contact ~0,08 kg

Maß L1 oder L2 (mm) dimension L1 or L2 (mm)	35	50	65	80	95	110	125	140	155	170
Anzahl Doppelkontaktelemente number of double contact elements	1	2	3	4	5	6	7	8	9	10

Spohn + Burkhardt
Elektrotechnische Fabrik Blaubeuren

Mauergasse 5
89143 BLAUBEUREN
GERMANY

Tel. +49 7344 171-0 info@spobu.de
Fax +49 7344 171-99 www.spobu.de

Meisterschalter NS0 mit Doppelhebel
Controllers NS0 with two handles

List 7 / 2014
M 9/5B

Typ NS0−−GGEA
type

Antrieb GGEA
siehe Seite 9/5
drive GGEA
see sheet 9/5

Einbauten im Hebel
siehe Seite 2/1...
additionals
see sheet 2/1...

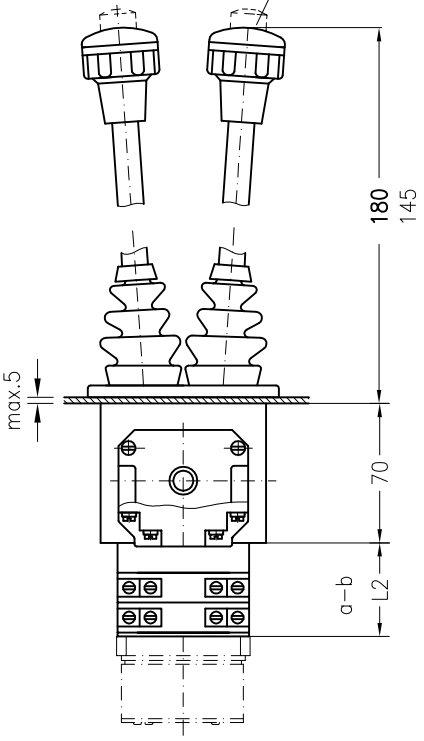

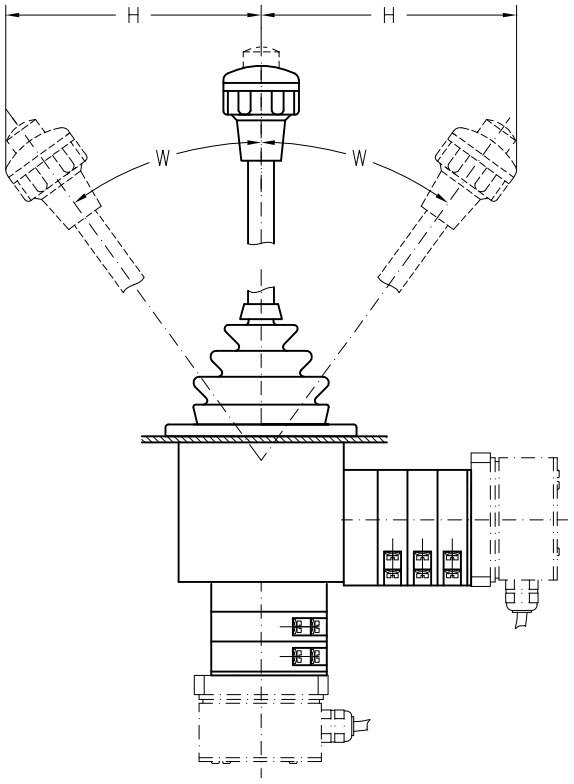

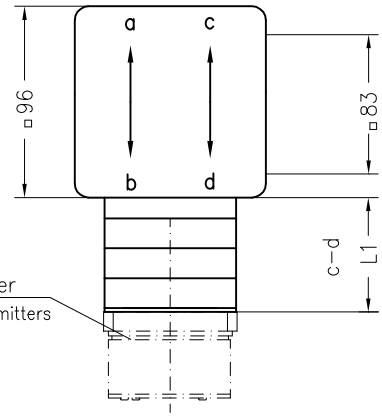

Kupplung für Geber
attachment for transmitters

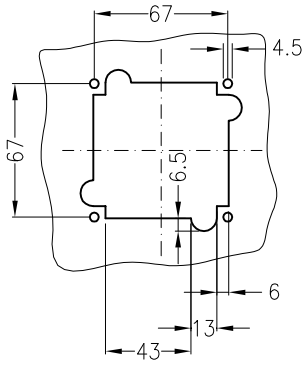

Bohrungen in der
Befestigungswand
mounting dimensions

bei 180 mm Hebel by lever 180 mm Position	W	≈ H mm
1−0−1	17°	70
2−0−2	35°	115
3−0−3	30°	105
4−0−4	38°	125
5−0−5	35°	115
6−0−6	42°	135
7−0−7	42°	135

Gewicht:
Antriebsblock ~1,6 kg
je Doppelkontakt ~0,08 kg
weight:
drive ~1,6 kg
each double contact ~0,08 kg

Maß L1 oder L2 (mm) dimension L1 or L2 (mm)	35	50	65	80	95	110	125	140	155	170
Anzahl Doppelkontaktelemente number of double contact elements	1	2	3	4	5	6	7	8	9	10

Spohn + Burkhardt
Elektrotechnische Fabrik Blaubeuren

Mauergasse 5
89143 BLAUBEUREN
GERMANY

Tel. +49 7344 171-0 info@spobu.de
Fax +49 7344 171-99 www.spobu.de

Typ NSO––D
type

Siehe Seite 9/6
see sheet 9/6

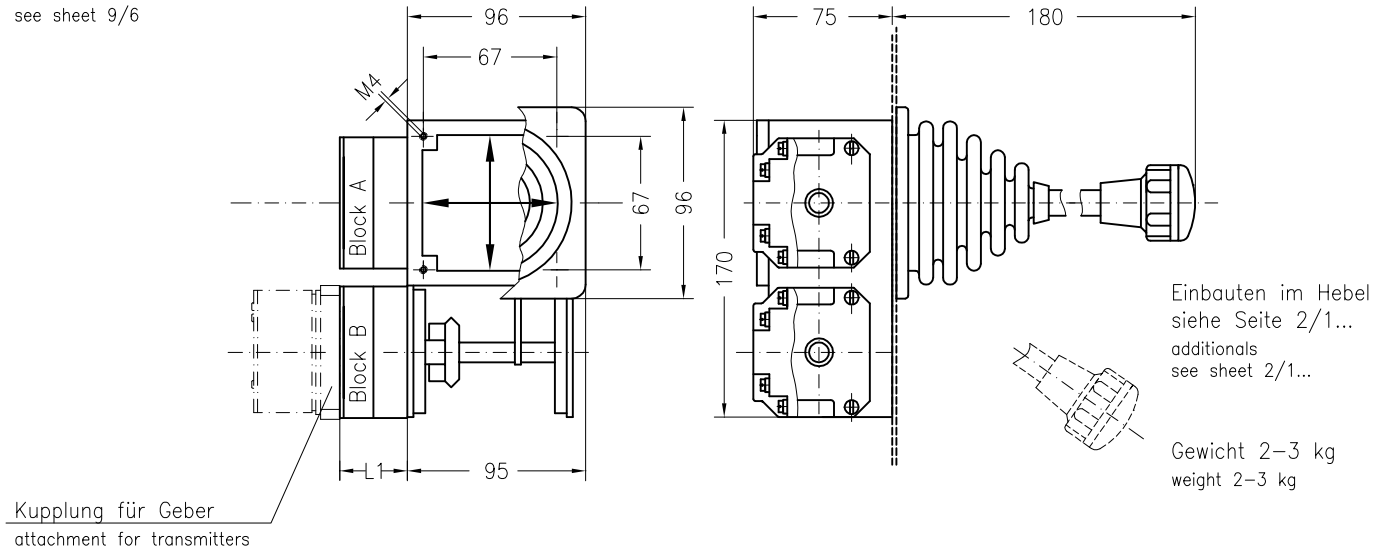

Anzahl Doppelkontaktelemente number of double contact elements	L1 bis /till 4–0–4	L1 ab/from 5–0–5
1	15	30
2	30	45
3	45	60
4	60	75
5	75	90
6	90	105

Bohrungen in der Befestigungswand
mounting dimensions

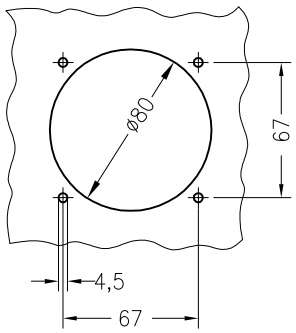

Ausführung links left version NSO––UD (R)	Ausführung rechts right version NSO––ND (R)
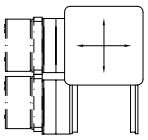	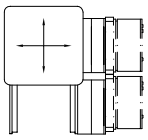

Drehrichtung des Schalters bzw. des Gebers bei Hebelbetätigung in Richtung....
rotation direction of controller or encoder lever movement in direction...

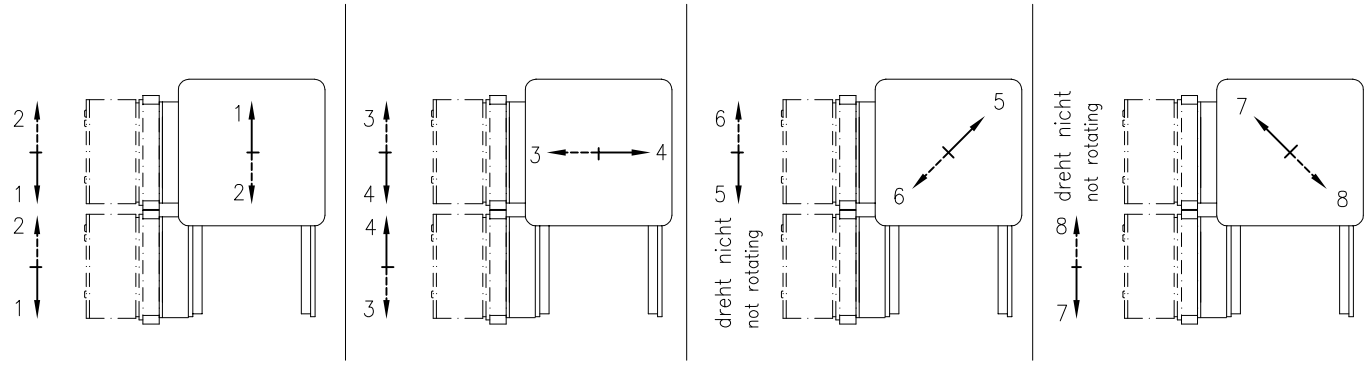

Spohn+Burkhardt
Elektrotechnische Fabrik Blaubeuren

Mauergasse 5
89143 BLAUBEUREN
GERMANY

Tel. +49 7344 171-0 info@spobu.de
Fax +49 7344 171-99 www.spobu.de

Konsolen–Meisterschalter VNS0–K

Bracket–controllers VNS0–K

List 7 / 2014
M 9/7

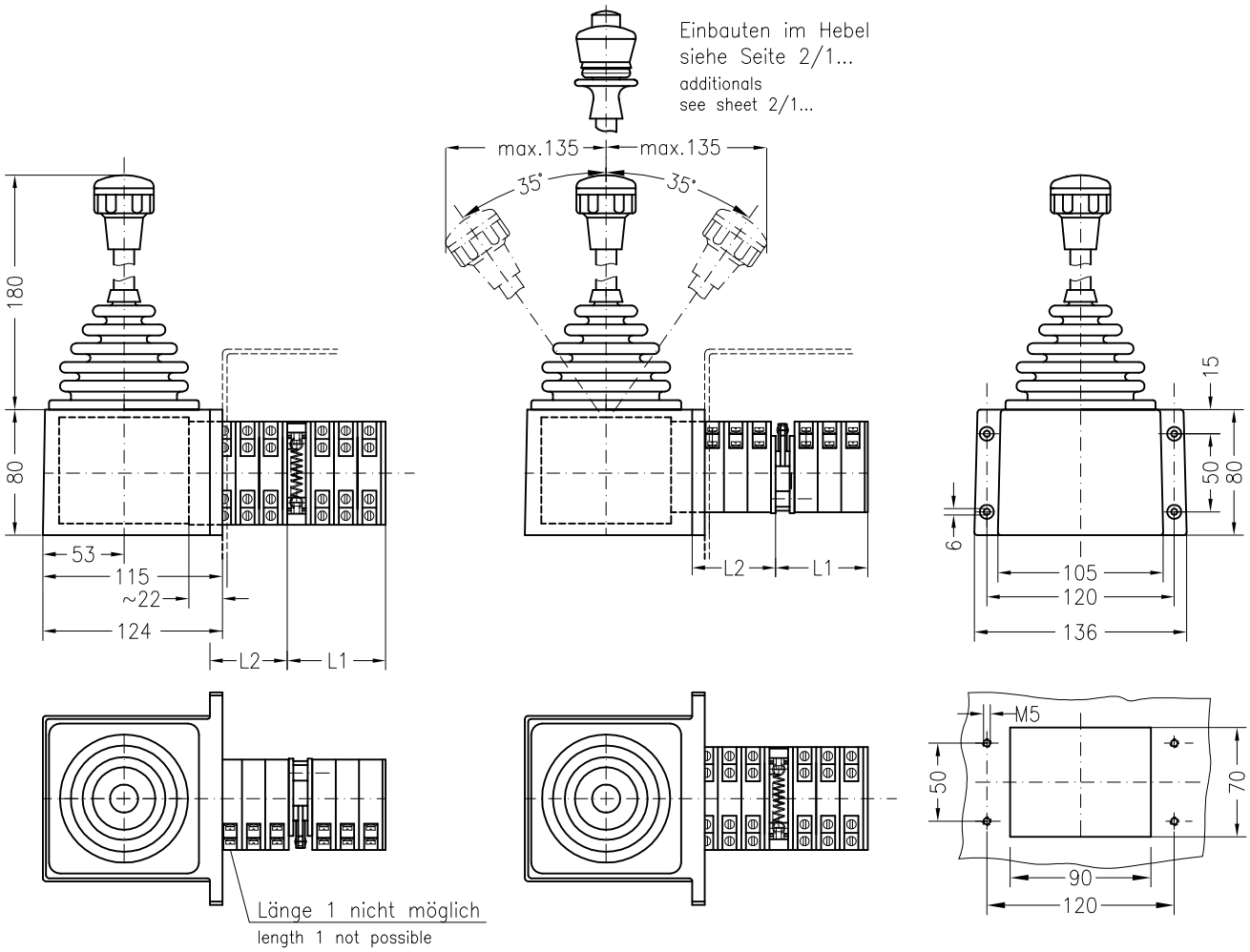

	Schalterlänge bei Anzahl Doppelkontaktelemente number of double contact elements																			
Fabrik Norm	1	2	3	4	5	6	7	8	9	10	11	12	13	14	15	16	17	18	19	20
VNS0K$^{N}_{U}$E(R) VNS0–KE(R) VNS0K–H(R)	35	50	65	80	95	110	125	140	155	170	185	200	215	230	245	260	275	290	310	325
Gewicht weight ~kg																				

Kontaktanschlüsse seitlich
contacts on side

Antriebsart drive arrangement **E**
Fabrik Norm VNS0–NKE(R) VNS0–UKE(R)
Anzahl Doppelkontaktelemente
number of double contact elements

Linker Block left block — Rechter Block right block

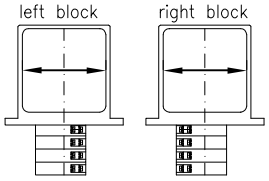

G
VNS0–NKG(R) VNS0–UKG(R)

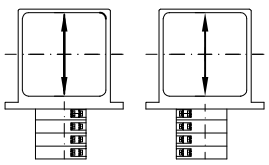

H
VNS0––NKH(R) VNS0––UKH(R)

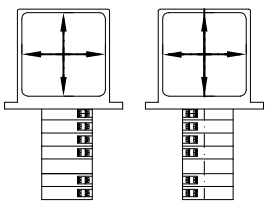

Kontaktanschlüsse oben
contacts on top

Antriebsart drive arrangem. **E**
Fabrik Norm VNS0–KE(R)

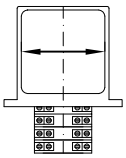

G
VNS0–KG(R)

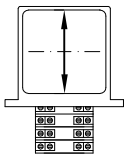

H
VNS0––KH(R)

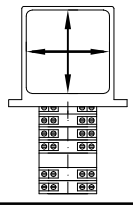

Spohn+Burkhardt
Elektrotechnische Fabrik Blaubeuren

Mauergasse 5
89143 BLAUBEUREN
GERMANY

Tel. +49 7344 171-0 info@spobu.de
Fax +49 7344 171-99 www.spobu.de

Meisterschalter NS00 mit Knebel– oder Kugelgriff mit auswechselbaren Doppelkontakten und Nockenscheiben

Switch NS00 with knob or handle

List 7 / 2014
M 9/8A

Einsatzschalter NS00–

switch

Anzahl Doppelkontaktelemente number of double contact elements
evtl. Kupplung für Geber attachment for transmitters

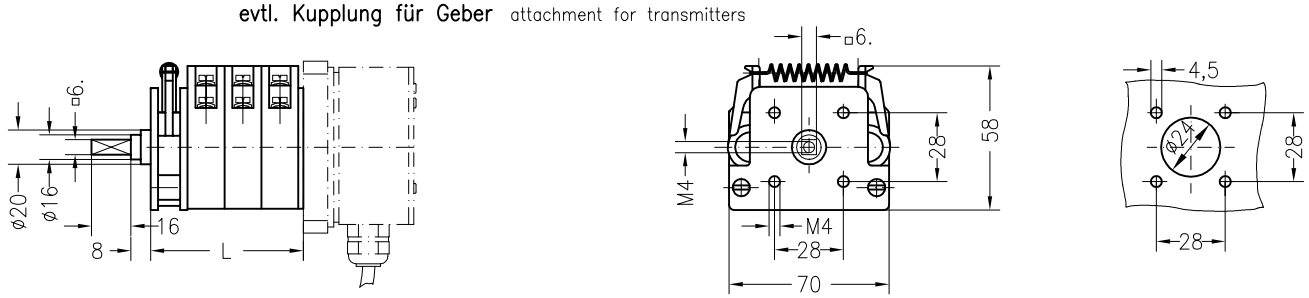

Einsatzschalter mit Rosette 72x72 mm NS00–F

switch with escutcheon 72x72 mm

Anzahl Doppelkontaktelemente number of double contact elements

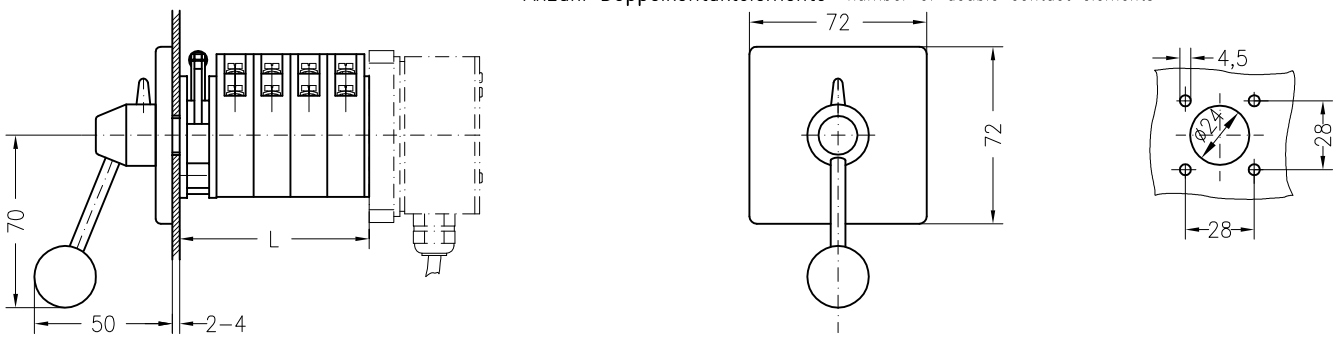

Einsatzschalter mit Rosette 96x96 mm NS00–FA

switch with escutcheon 96x96

Anzahl Doppelkontaktelemente number of double contact elements

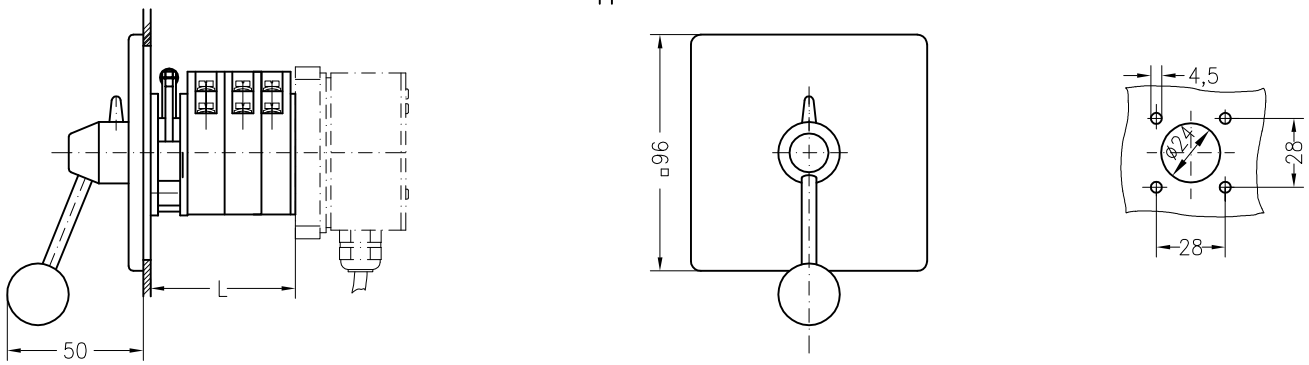

Einsatzschalter mit wasserdichter Rundrosette NS00–FOD

switch with escutcheon plate ø70 mm

Anzahl Doppelkontaktelemente number of double contact elements

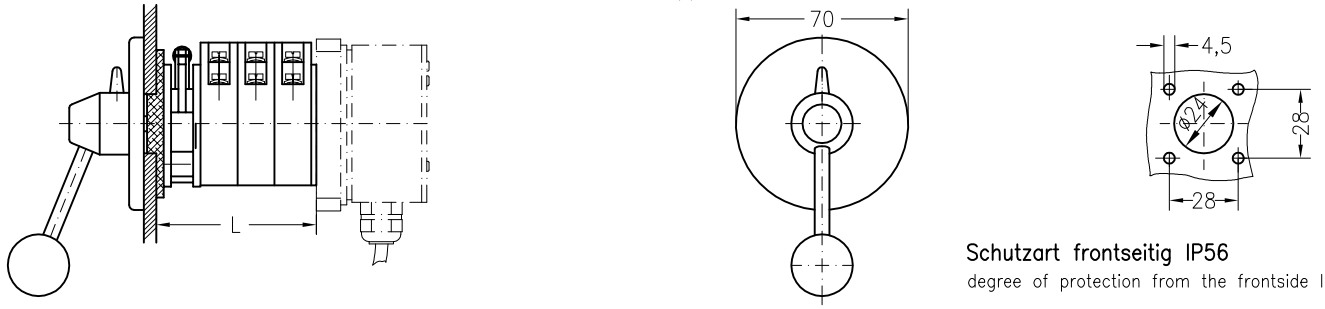

Schutzart frontseitig IP56
degree of protection from the frontside IP56

Anzahl Doppelkontaktelemente number of double contact elements

mit Rastung with notches	NS001_	NS002_	NS003_	NS004_	NS005_	NS006_	NS007_	NS008_	NS009_	NS0010_
mit Rückzug with spring return	NS001_R		NS002_R	NS003_R	NS004_R	NS005_R	NS006_R	NS007_R	NS008_R	NS009_R
Länge length L mm	35	50	65	80	95	110	125	140	155	170
Gewicht weight ~ g	590	680	770	860	950	1040	1130	1220	1310	1400

mit zusätzlicher Reibbremse für Potentiometerbetrieb, Länge L + 15 mm.
mit Doppelrastung L + 15 mm.
with additional friction disc for potentiometer, length L + 15 mm
with double notches, length L + 15 mm

Spohn + Burkhardt
Elektrotechnische Fabrik Blaubeuren

Mauergasse 5
89143 BLAUBEUREN
GERMANY

Tel. +49 7344 171-0 info@spobu.de
Fax +49 7344 171-99 www.spobu.de

Meisterschalter NS00 gußgekapselt
Controller NS00 cast enclosure

List 7 / 2014
M 9/8B

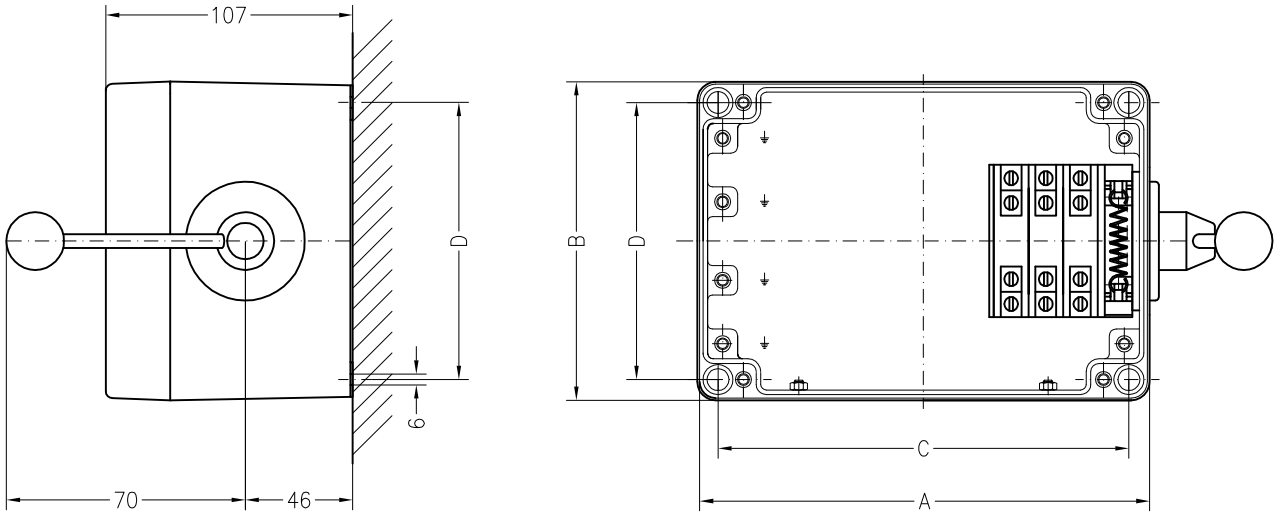

Schutzart IP54
mit Kugelgriff
auf Wunsch: Knebelgriff
degree of protection IP54
with handle according
on request: knob

ohne Selbstrückgang without spring return		mit Selbstrückgang with spring return						
Typ Type	Anzahl Doppel–kontaktelemente number of double contact elements	Typ Type	Anzahl Doppel–kontaktelemente number of double contact elements	A	B	C	D	Gewicht ~kg weight ~kg
NS 006 GA	1	NS 006 GAR	1	138	135	120	117	1,1
NS 006 GA	2	NS 006 GAR	2					1,2
NS 006 GA	3	NS 006 GAR	3					1,3
NS 006 GA	4	NS 006 GAR	4					1,4
NS 006 GA	5	NS 006 GAR	5					1,5
NS 006 GA	6							1,6
NS 0010 GA	7	NS 0010 GAR	6	196	138	178	120	1,8
NS 0010 GA	8	NS 0010 GAR	7					1,9

Spohn + Burkhardt
Elektrotechnische Fabrik Blaubeuren

Mauergasse 5
89143 BLAUBEUREN
GERMANY

Tel. +49 7344 171-0 info@spobu.de
Fax +49 7344 171-99 www.spobu.de

Meisterschalter VNS0, stahlgekapselt IP54, mit Scharnierdeckel
Controller VNS0, steel enclosure IP54, with hinged cover

List 7 / 2014
M 9/9

Typ VNS0–QF–E
type

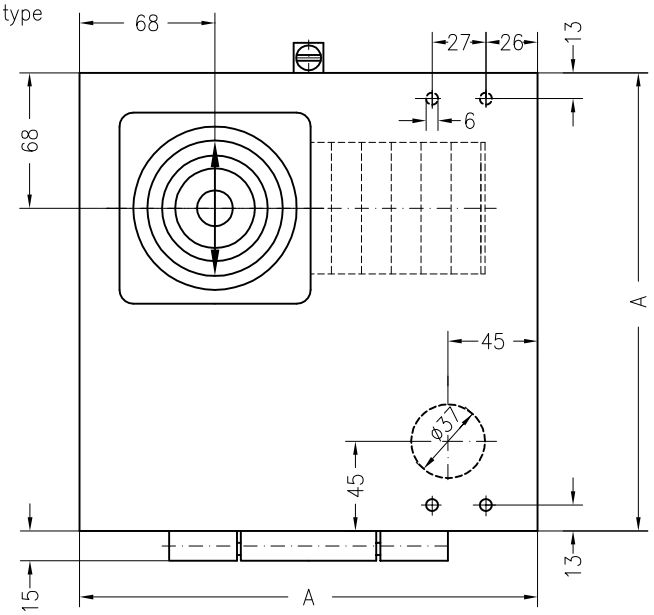

Pulverbeschichtet in RAL 7032 kieselgrau
powder coated RAL 7032 pebble grey

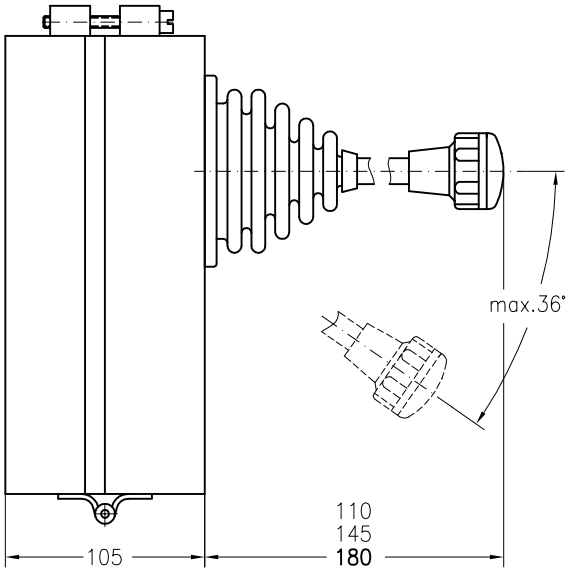

Typ type	Maß A dimension A	Gewicht weight
VNS03QF–E	180	3–6 kg
VNS06QF–E	230	
VNS09QF–E	280	

Anordnung
arrangement

linke Hand left hand | rechte Hand right hand

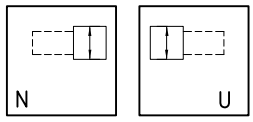

Schaltrichtung
switching direction

linke Hand left hand | rechte Hand right hand

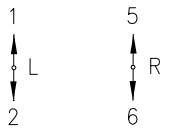

Typ VNS0–QF–V
type

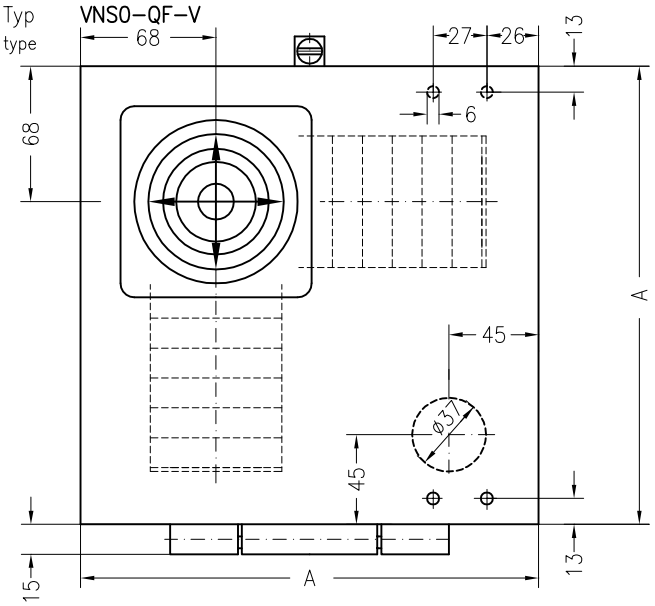

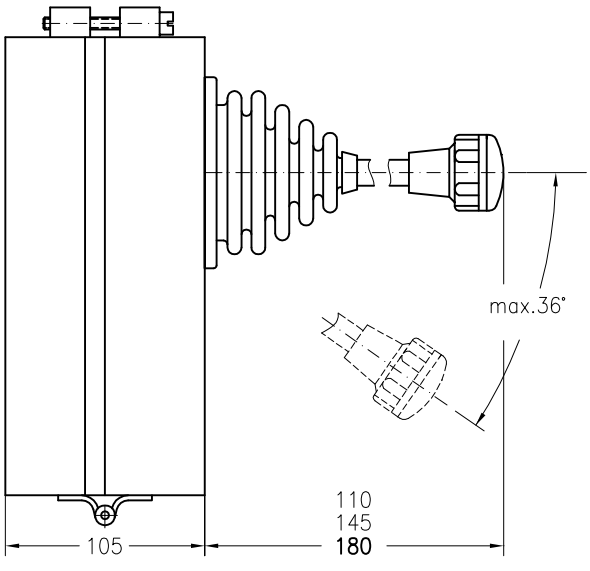

Typ type	Maß A dimension A	Gewicht weight
VNS03QF–V	180	4–8 kg
VNS06QF–V	230	
VNS09QF–V	280	

Anordnung
arrangement

linke Hand left hand | rechte Hand right hand | linke Hand left hand | rechte Hand right hand

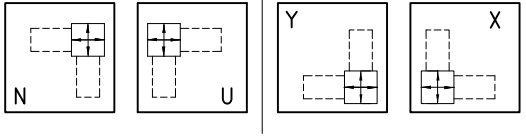

Schaltrichtung
switching direction

linke Hand left hand | rechte Hand right hand

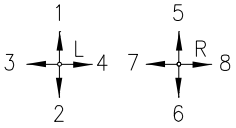

Spohn + Burkhardt
Elektrotechnische Fabrik Blaubeuren

Mauergasse 5
89143 BLAUBEUREN
GERMANY

Tel. +49 7344 171-0 info@spobu.de
Fax +49 7344 171-99 www.spobu.de

Kegelradantrieb NS2–KA, schwere Ausführung
Controller NS2–KA, heavy version

List 7 / 2014
M 10/10

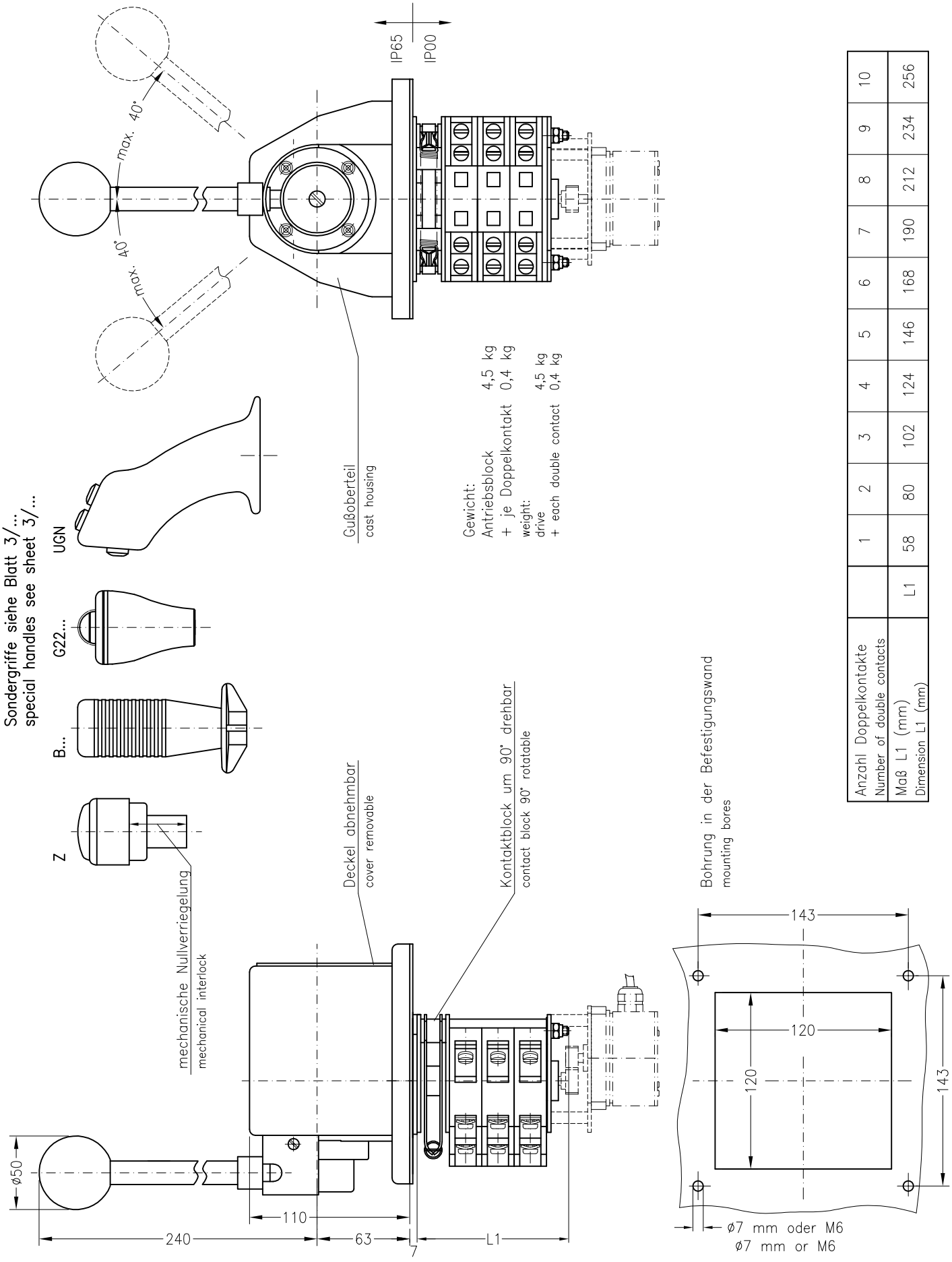

Anzahl Doppelkontakte Number of double contacts		1	2	3	4	5	6	7	8	9	10
Maß L1 (mm) Dimension L1 (mm)	L1	58	80	102	124	146	168	190	212	234	256

Spohn + Burkhardt
Elektrotechnische Fabrik Blaubeuren

Mauergasse 5
89143 BLAUBEUREN
GERMANY

Tel. +49 7344 171-0 info@spobu.de
Fax +49 7344 171-99 www.spobu.de

Typ VNS2–F–E Antrieb E siehe Seite 10/2
type drive E see sheet 10/2

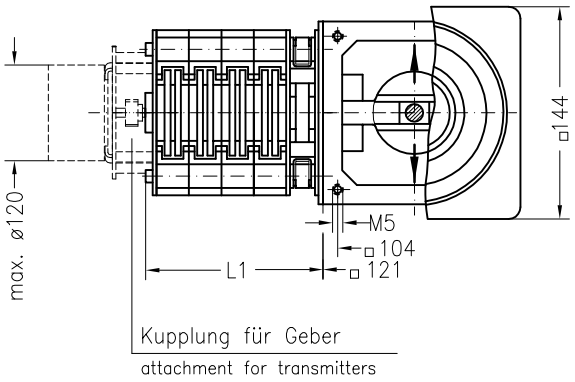

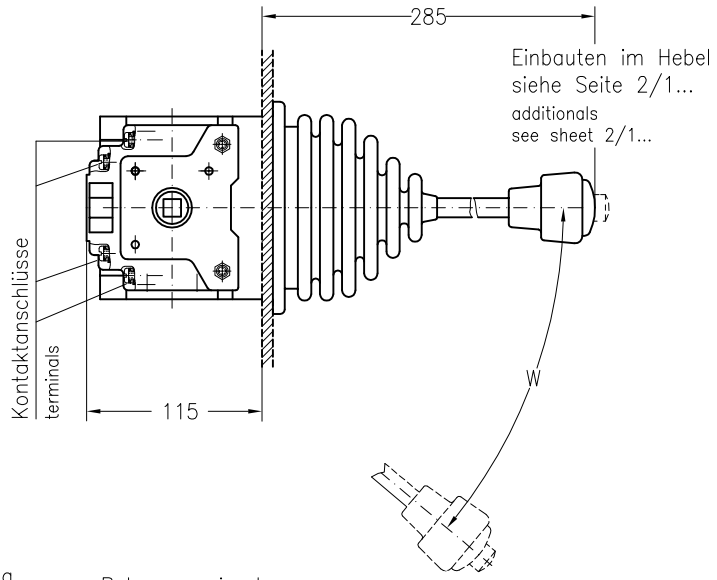

Anordnung
arrangement

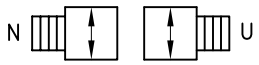

Gewicht:
Antriebsblock ~2,8 kg
je Doppelkontakt ~0,4 kg
weight:
drive ~2,8 kg
each double contact ~0,4 kg

Bohrungen in der Befestigungswand
mounting dimensions

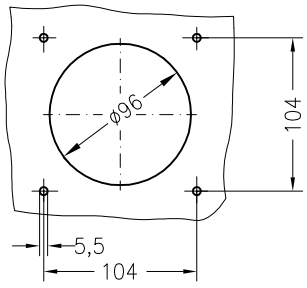

Typ VNS2––F–V Antrieb V siehe Seite 10/2
type drive V see sheet 10/2

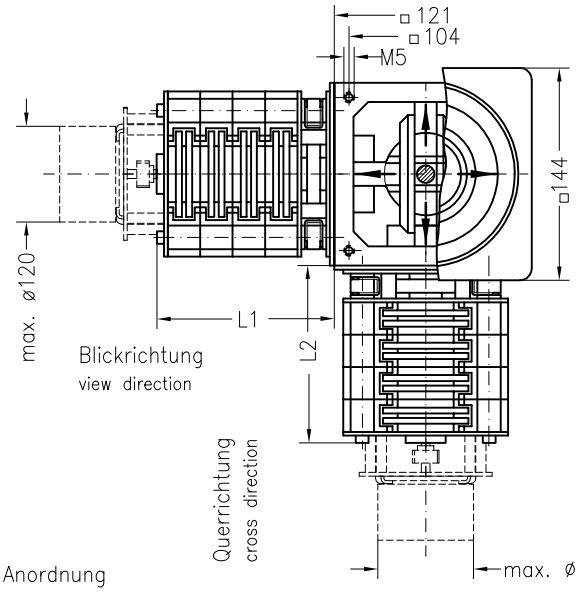

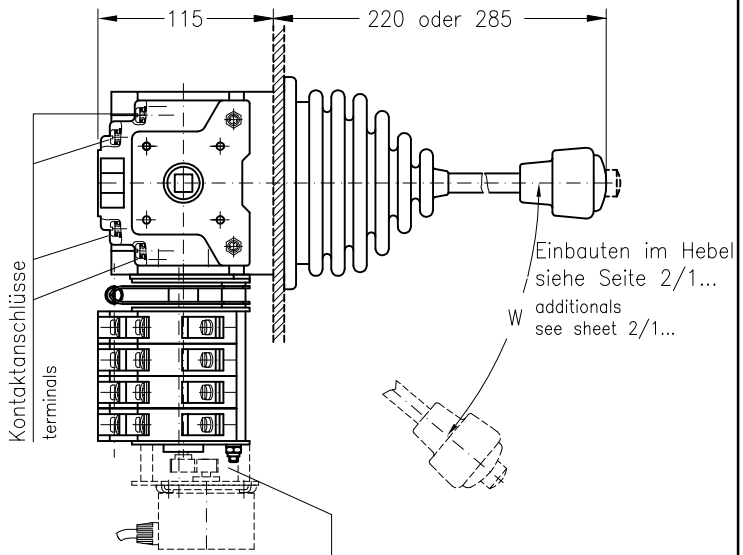

Anordnung
arrangement

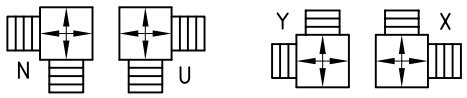

Gewicht:
Antriebsblock ~3 kg
je Doppelkontakt ~0,4 kg
weight:
drive ~3 kg
each double contact ~0,4 kg

Kupplung für Geber
attachment for transmitters

Stellungen	W
1–0–1	20°
2–0–2	20°
3–0–3	30°
4–0–4	33°
5–0–5	30°
6–0–6	35°

Maß L1 oder L2 dimension L1 or L2	58	80	102	124	146	168	190	212	234	256
Anzahl Doppelkontakte number of double contacts	1	2	3	4	5	6	7	8	9	10

Spohn+Burkhardt
Elektrotechnische Fabrik Blaubeuren

Mauergasse 5
89143 BLAUBEUREN
GERMANY

Tel. +49 7344 171-0 info@spobu.de
Fax +49 7344 171-99 www.spobu.de

List 7 / 2014 M 10/2B	Meisterschalter VNS2, 25 Amp. schwere Ausführung bedienseitige Anschlüsse Controllers VNS2, 25 Amp, heavy version	List 7 / 2014 M 10/2B

Bohrungen im Gehäusedeckel
bores at cover

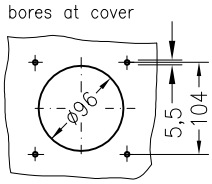

Bohrungen in der Rückwand
bores at back board

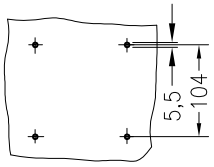

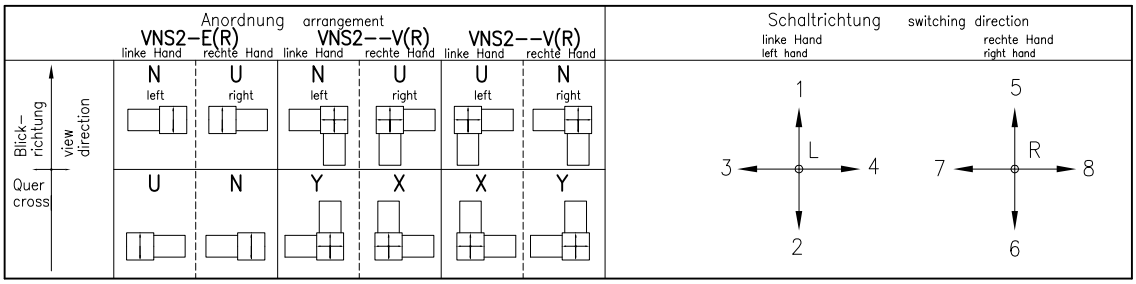

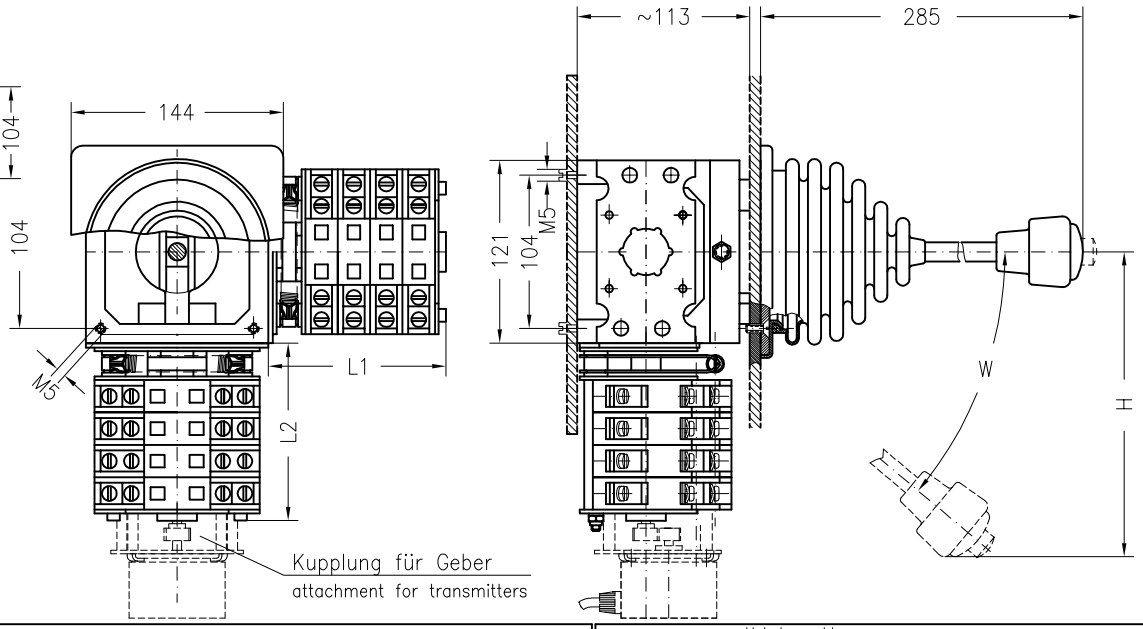

Anzahl Doppelkontakte number of double contacts	für Wechselstrom für Gleichstrom mit Blasung			VNS2– VNSB2–	for AC with permanent magnet for DC					
	1	2	3	4	5	6	7	8	9	10
L1 L2 L3	58	80	102	124	146	168	190	212	234	256

Hebelausschlag lever deflection								
Stellungen steps	H	W	Stellungen steps	H	W	Stellungen steps	A	W
1–0–1	120	20°	3–0–3	162	30°	5–0–5	200	40°
2–0–2	200	40°	4–0–4	200	40°	6–0–6	200	40°

Antriebsart: drive:

E

Typ type VNS(B)2–NUE(R)
L1

Zusatz bei Dauer-magnetblasung
addition by permanent magnet

Anzahl Doppelkontaktelemente
number of double contact elements

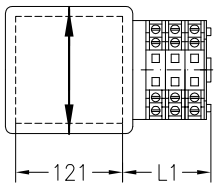

Gewicht: weight:
Antriebsblock: drive: 2,8 kg
je Doppelkontakt: each double contact: 0,4 kg

V

VNS(B)2–– NUXY V(R)
L1 L2

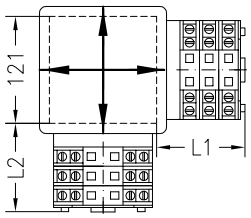

3 kg
0,4 kg

G

VNS(B)2–G(R)
L1

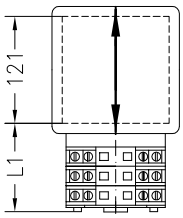

3 kg
0,4 kg

GG

NS(B)2––GG(R)
L1 L2

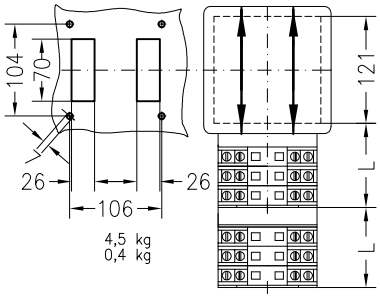

4,5 kg
0,4 kg

H

VNS(B)2––H(R)
L1 L2

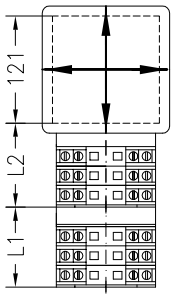

4 kg
0,4 kg

Spohn+Burkhardt
Elektrotechnische Fabrik Blaubeuren
Mauergasse 5
89143 BLAUBEUREN
GERMANY
Tel. +49 7344 171-0 info@spobu.de
Fax +49 7344 171-99 www.spobu.de

Meisterschalter VNS2–FG, VNS2–FH für Frontbefestigung
Controllers VNS2–FG, VNS2–FH for front mounted

List 7 / 2014
M 10/3

Typ VNS2–F–G
type

Antrieb G
siehe Seite 10/3
drive G
see sheet 10/3

Gewicht:
Antriebsblock ~3 kg
je Doppelkontakt ~0,4 kg
weight:
drive ~3 kg
each double contact ~0,4 kg

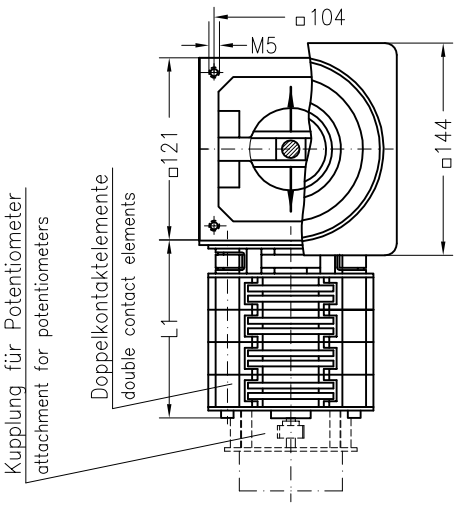

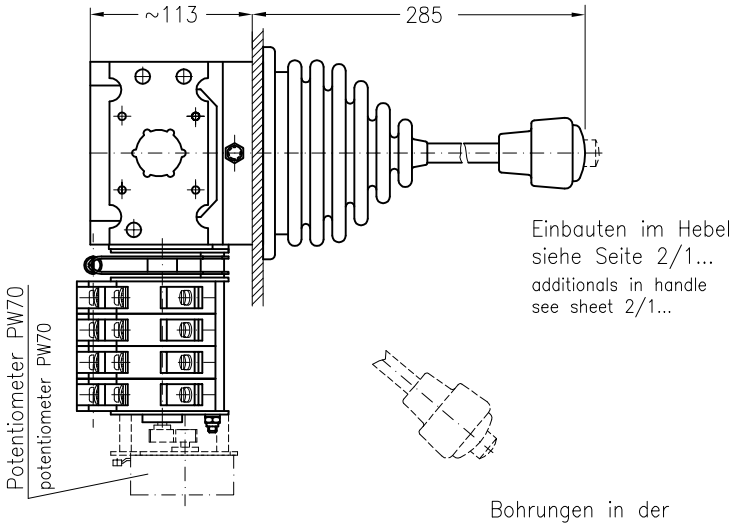

Bohrungen in der
Befestigungswand
mounting dimensions

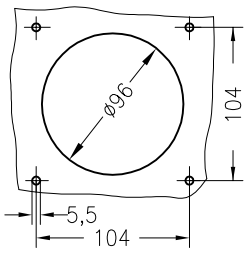

Typ VNS2––F–H
type

Antrieb H
siehe Seite 10/3
drive H
see sheet 10/3

Gewicht:
Antriebsblock ~4 kg
je Doppelkontakt ~0,4 kg
weight:
drive ~4 kg
each double contact ~0,4 kg

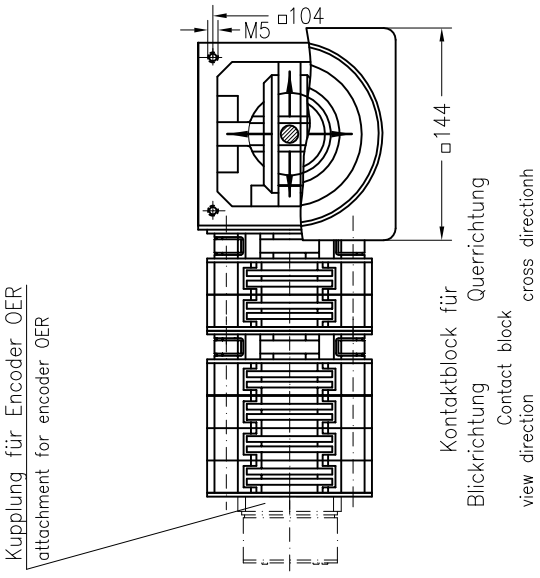

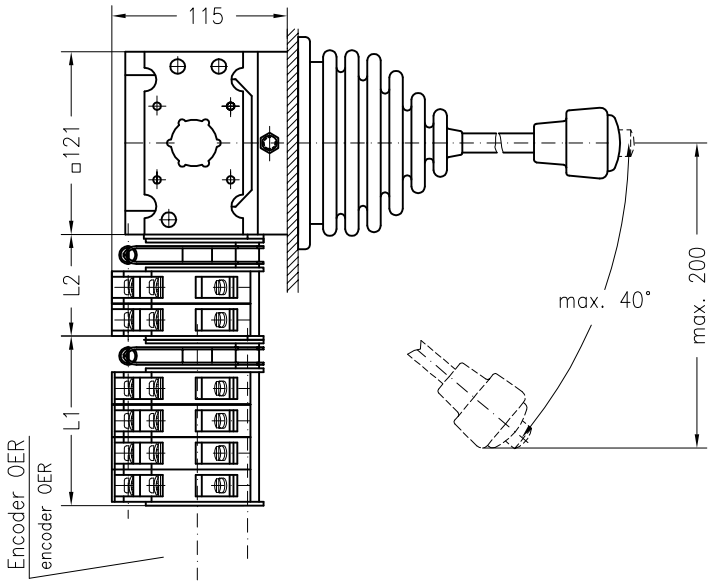

Anzahl Doppelkontakte number of double contacts	1	2	3	4	5	6	7	8	9	10
Maß L1 oder L2 dimension L1 or L2	58	80	102	124	146	168	190	212	234	256

Spohn+Burkhardt
Elektrotechnische Fabrik Blaubeuren

Mauergasse 5
89143 BLAUBEUREN
GERMANY

Tel. +49 7344 171-0 info@spobu.de
Fax +49 7344 171-99 www.spobu.de

Meisterschalter VNS2–A, VNS2–EA, VNS2–AA für Frontbefestigung
Controllers VNS2–A, VNS2–EA, VNS2–AA for front mounted

List 7 / 2014
M 10/4

Typ VNS2–A
type

Antrieb A
siehe Seite 10/4
drive A
see sheet 10/4

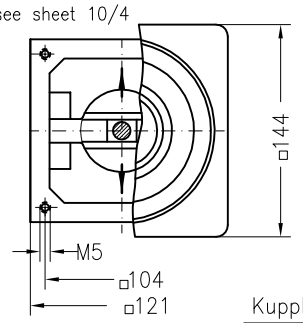

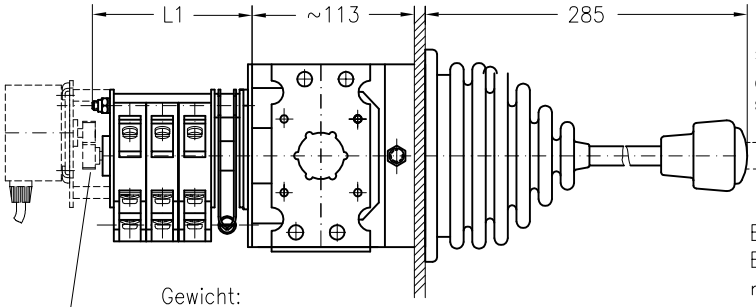

Einbauten im Hebel
siehe Seite 2/1...
additionals
see sheet 2/1...

Gewicht:
Antriebsblock ≈3,2kg
je Doppelkontakt ≈0,4kg
weight:
drive ≈3,2kg
each double contact ≈0,4kg

Bohrungen in der Befestigungswand
mounting dimensions

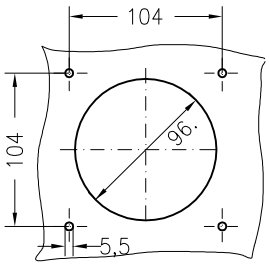

Typ VNS2––EA
type

Antrieb EA
siehe Seite 10/4
drive EA
see sheet 10/4

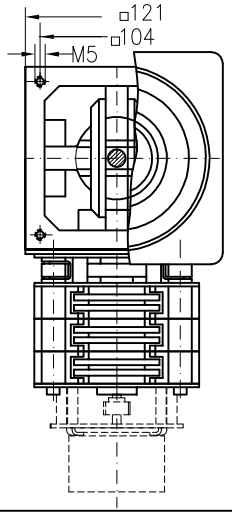

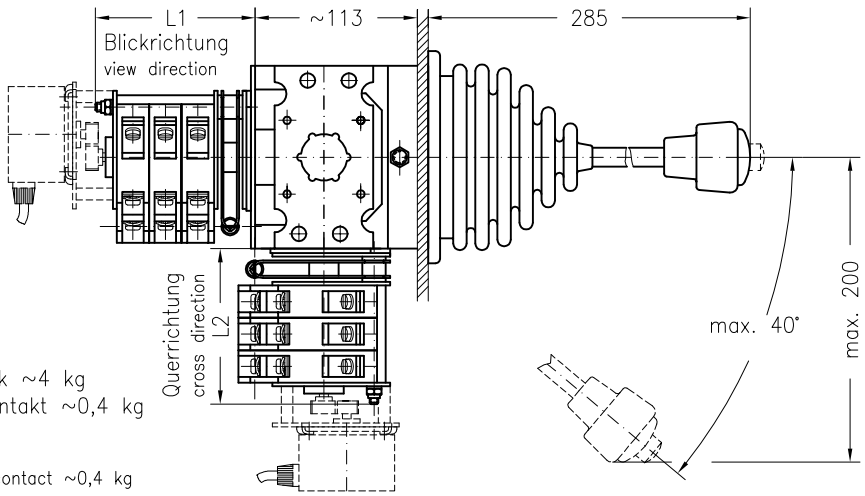

Gewicht:
Antriebsblock ≈4 kg
je Doppelkontakt ≈0,4 kg
weight:
drive ≈4 kg
each double contact ≈0,4 kg

Typ VNS2––AA
type

Antrieb AA
siehe Seite 10/4
drive AA
see sheet 10/4

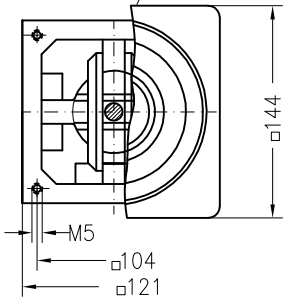

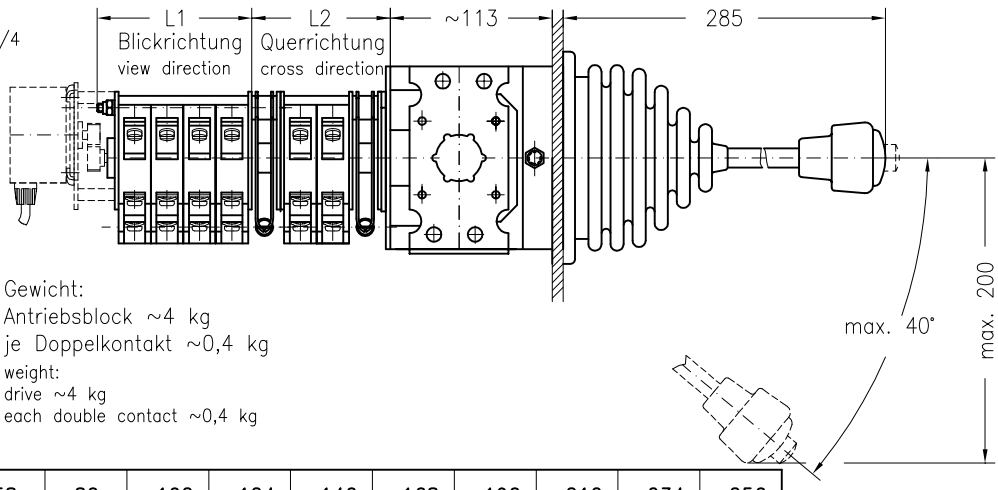

Gewicht:
Antriebsblock ≈4 kg
je Doppelkontakt ≈0,4 kg
weight:
drive ≈4 kg
each double contact ≈0,4 kg

Maß L1 oder L2 dimension L1 or L2	58	80	102	124	146	168	190	212	234	256
Anzahl Doppelkontakte number of double contacts	1	2	3	4	5	6	7	8	9	10

Spohn + Burkhardt
Elektrotechnische Fabrik Blaubeuren

Mauergasse 5
89143 BLAUBEUREN
GERMANY

Tel. +49 7344 171-0 info@spobu.de
Fax +49 7344 171-99 www.spobu.de

Typ NS2--GGH
type

Antrieb GGH
siehe Seite 10/5
drive GGH
see sheet 10/5

Einbauten im Hebel
siehe Seite 2/1...
additionals
see sheet 2/1...

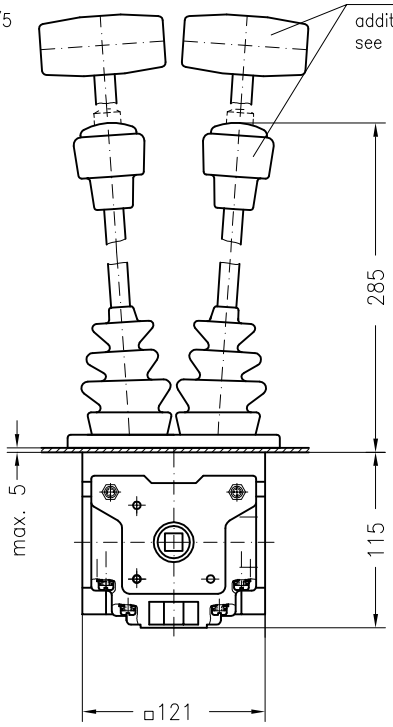

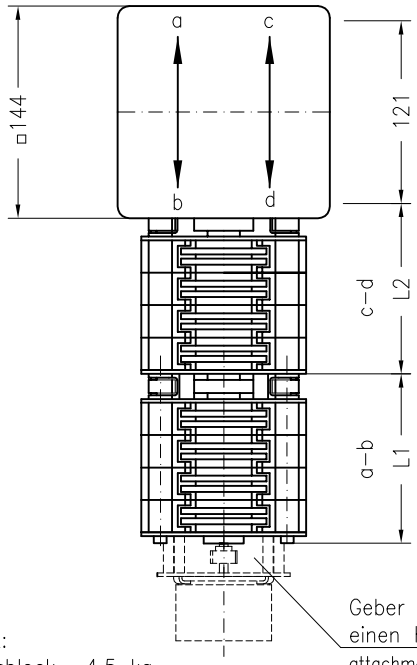

Geber nur für
einen Hebel möglich
attachment for transmitter
only for one handle

Gewicht:
Antriebsblock ~4,5 kg
je Doppelkontakt ~0,4 kg
weight:
drive ~4,5 kg
each double contact ~0,4 kg

Typ NS2--GGAA
type

Antrieb GGAA
siehe Seite 10/5
drive GGAA
see sheet 10/5

Einbauten im Hebel
siehe Seite 2/1...
additionals
see sheet 2/1...

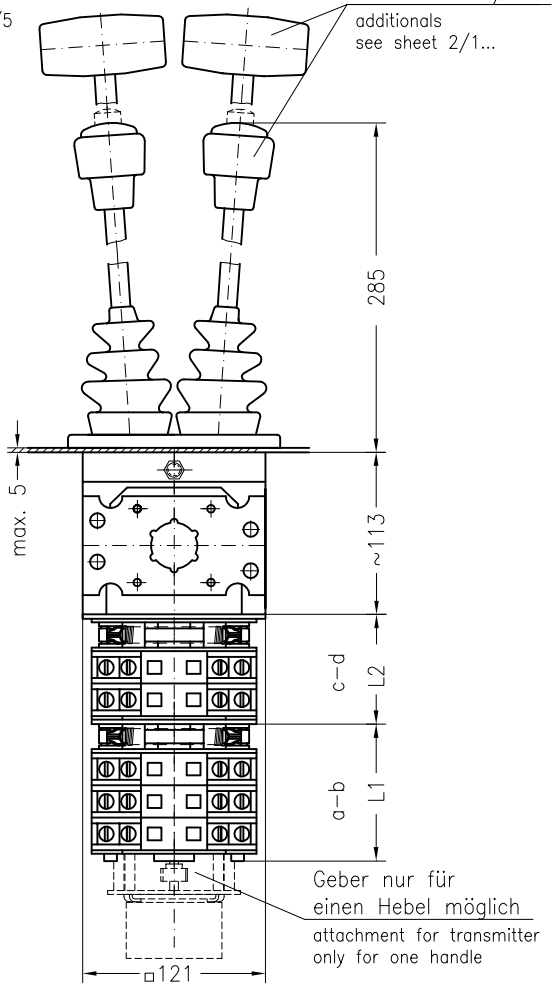

Geber nur für
einen Hebel möglich
attachment for transmitter
only for one handle

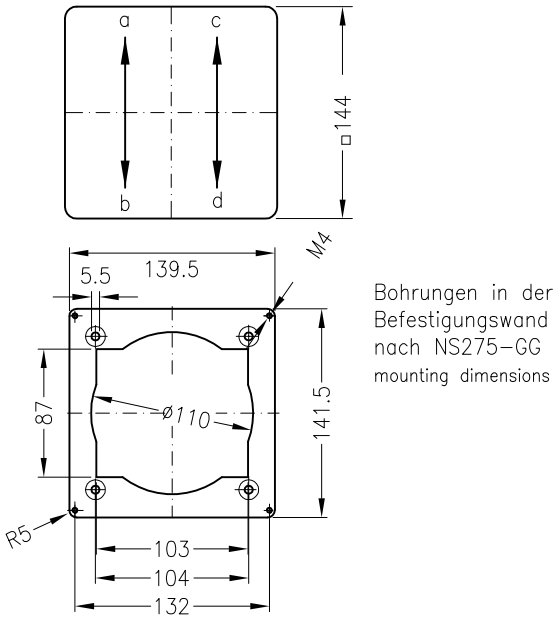

Bohrungen in der
Befestigungswand
nach NS275-GG
mounting dimensions

Maß L1 oder L2 dimension L1 or L2	58	80	102	124	146	168	190	212	234	256
Anzahl Doppelkontakte number of double contacts	1	2	3	4	5	6	7	8	9	10

Spohn + Burkhardt
Elektrotechnische Fabrik Blaubeuren

Mauergasse 5
89143 BLAUBEUREN
GERMANY

Tel. +49 7344 171-0 info@spobu.de
Fax +49 7344 171-99 www.spobu.de

Meisterschalter NS2 mit Doppelhebel
Controllers NS2 with two handles

List 7 / 2014
M 10/5B

Typ NS2--GGEA
type

Antrieb GGEA
siehe Seite 10/5
drive GGEA
see sheet 10/5

Einbauten im Hebel
siehe Seite 2/1...
additionals
see sheet 2/1...

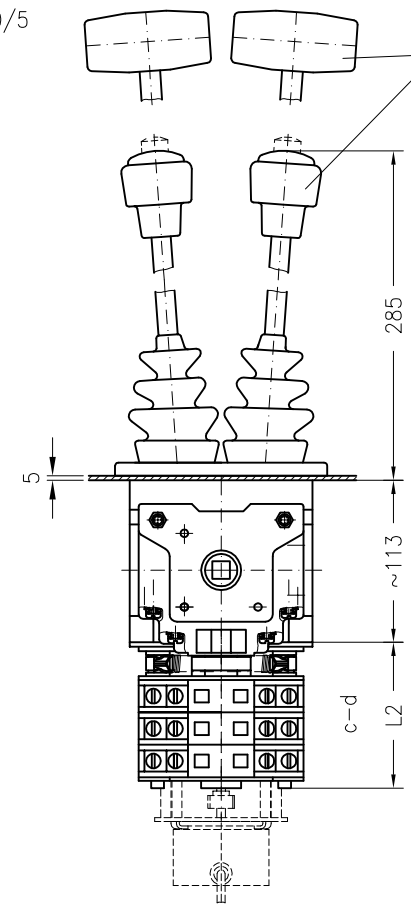

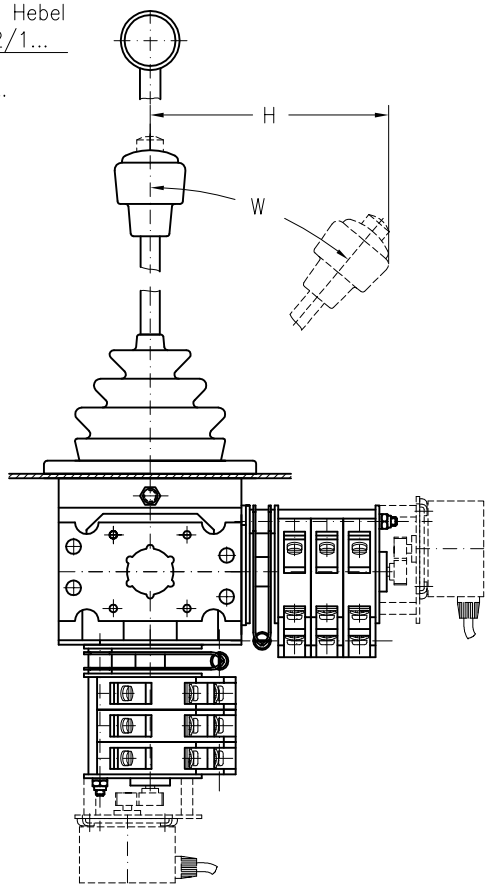

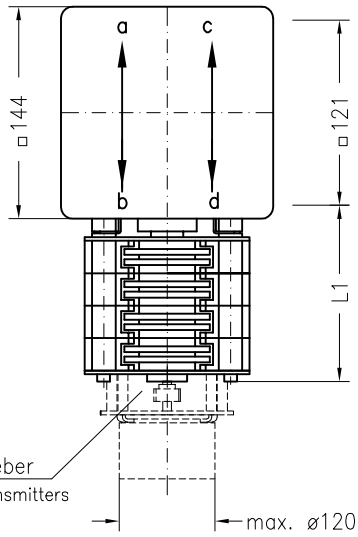

Kupplung für Geber
attachment for transmitters

max. ø120

Bohrungen in der
Befestigungswand
nach NS275-GG
mounting dimensions

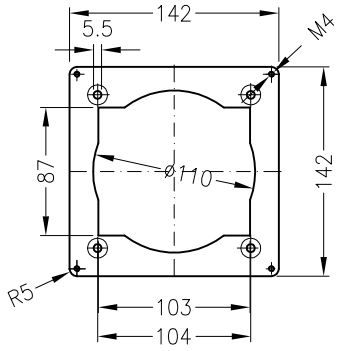

Gewicht:
Antriebsblock ~4,5 kg
je Doppelkontakt ~0,4 kg
weight:
drive ~4,5 kg
each double contact ~0,4 kg

Maß L1 oder L2 dimension L1 or L2	58	80	102	124	146	168	190	212	234	256
Anzahl Doppelkontakte number of double contacts	1	2	3	4	5	6	7	8	9	10

Bei 180 mm Hebel by level 180 mm		
Pos.	W	H
1-0-1	20°	120
2-0-2	40°	200
3-0-3	30°	162
4-0-4	40°	200
5-0-5	40°	200
6-0-6	40°	200
7-0-7	40°	200

Spohn+Burkhardt
Elektrotechnische Fabrik Blaubeuren

Mauergasse 5
89143 BLAUBEUREN
GERMANY

Tel. +49 7344 171-0 info@spobu.de
Fax +49 7344 171-99 www.spobu.de

Konsolen–Meisterschalter VNS2–K

Bracket–controllers VNS2–K

List 7 / 2014
M 10/6

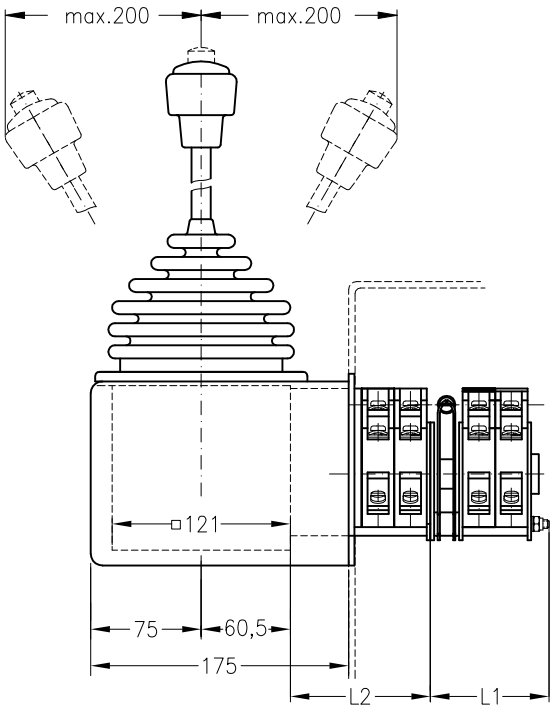

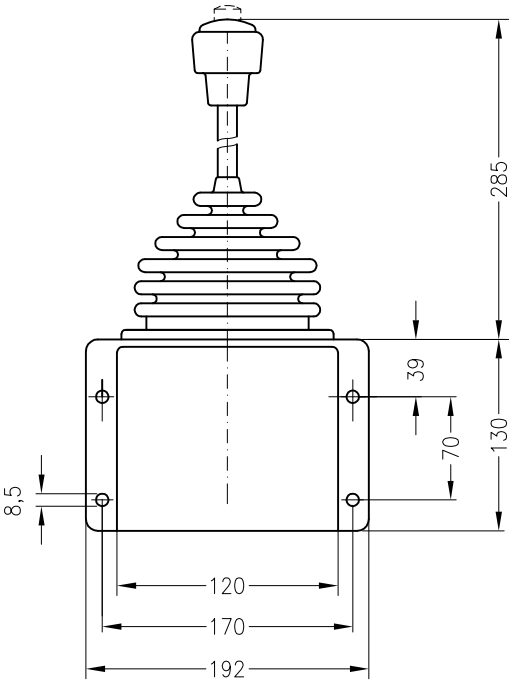

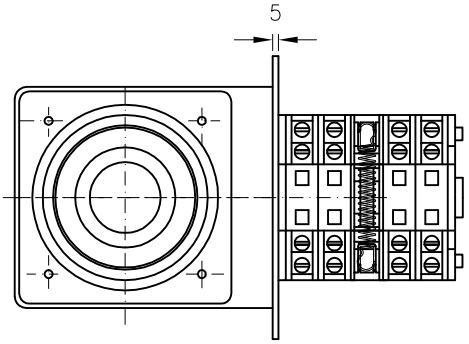

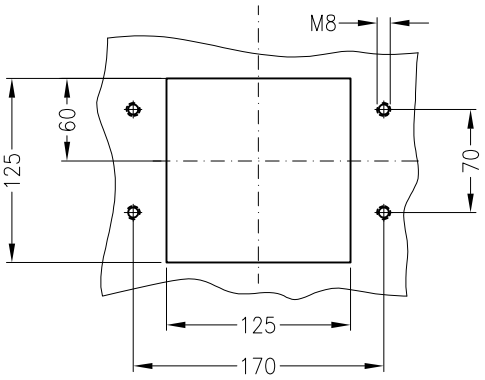

Anzahl Doppelkontakte number of double contakct elements			für Wechselstrom für Gleichstrom mit Blasung			for AC with permanent magnet for DC			VNS2– VNSB2–	
	1	2	3	4	5	6	7	8	9	10
L1 od. L2	58	80	102	124	146	168	190	212	234	256

Antriebsart type of drive F. Norm	E VNS(B)2–KE(R)	G VNS(B)2–KG(R)	H VNS(B)2––KH(R)	GG NS(B)2––KGG(R)
Kontaktanschlüsse seitlich connections on the side	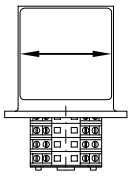	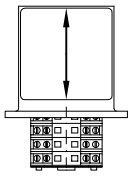	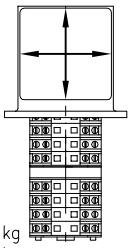	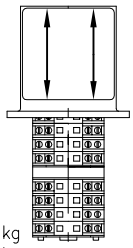
Gewicht: Antriebsblock: je Doppelkontakt:	weight: drive: each double contact: 0,4 kg	4,9 kg 0,4 kg	5,9 kg 0,4 kg	6,4 kg 0,4 kg

Spohn + Burkhardt
Elektrotechnische Fabrik Blaubeuren

Mauergasse 5
89143 BLAUBEUREN
GERMANY

Tel. +49 7344 171-0 info@spobu.de
Fax +49 7344 171-99 www.spobu.de

Meisterschalter NS2 mit Knebel– oder Kugelgriff
Controllers NS2 knob or handle

List 7 / 2014
M 10/7A

Einsatzschalter
switch

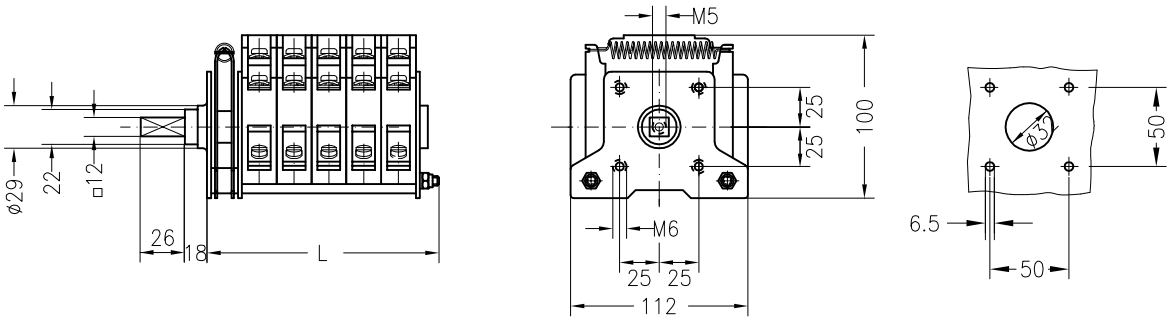

Fabrik–Norm											
	mit Rastung notching	NS201	NS202	NS203	NS204	NS205	NS206	NS207	NS208	NS209	NS210	
	mit Selbstrückgang spring return	NS201R		NS202R	NS203R	NS204R	NS205R	NS206R	NS207R	NS208R	NS209R	NS210R
	Länge L mm length	62	84	106	128	150	172	194	216	238	260	282
	Gewicht ~kg weight ~kg	0,8	1,4	2,0	2,6	3,2	3,8	4,4	5,0	5,6	6,2	6,8

Einsatzschalter mit Rosette 96x96 mm
switch with escutcheon 96x96 mm

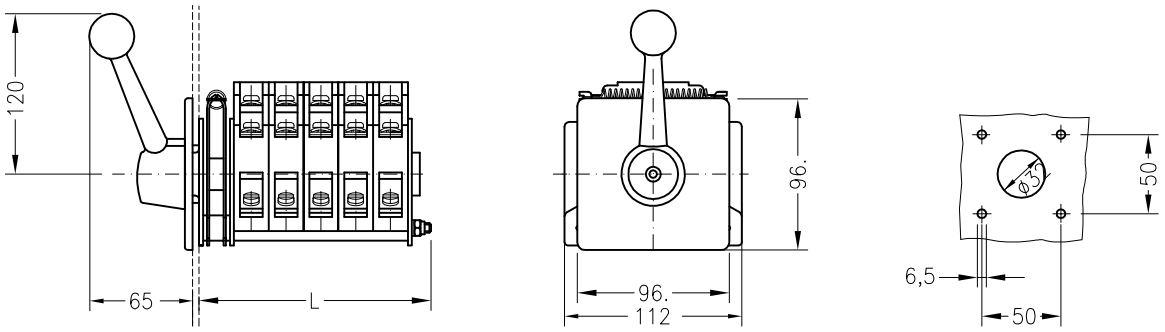

Fabrik–Norm											
	mit Rastung notching	NS201F	NS202F	NS203F	NS204F	NS205F	NS206F	NS207F	NS208F	NS209F	NS210F	
	mit Selbstrückgang spring return	NS201FR		NS202FR	NS203FR	NS204FR	NS205FR	NS206FR	NS207FR	NS208FR	NS209FR	NS210FR
	Länge L mm length	62	84	106	128	150	172	194	216	238	260	282
	Gewicht ~kg weight ~kg	0,8	1,4	2,0	2,6	3,2	3,8	4,4	5,0	5,6	6,2	6,8

Einbauschalter mit wasserdichter Rundrosette
switch with escutcheon , water resistant

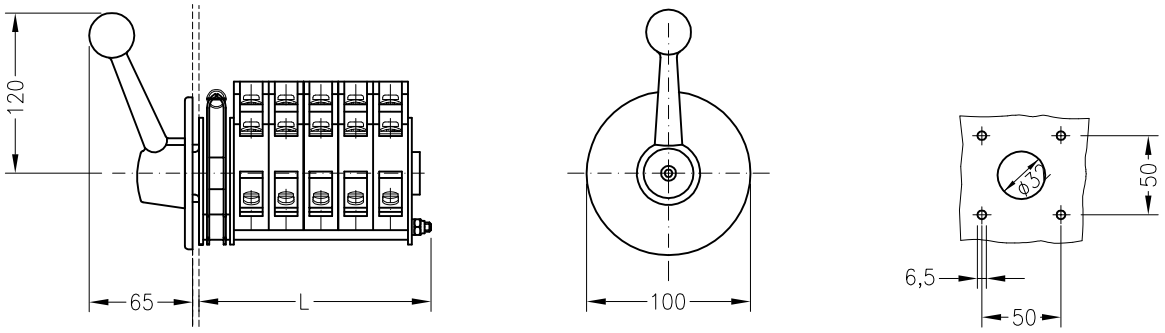

Fabrik–Norm											
	mit Rastung notching	NS201FD	NS202FD	NS203FD	NS204FD	NS205FD	NS206FD	NS207FD	NS208FD	NS209FD	NS210FD	
	mit Selbstrückgang spring return	NS201FDR		NS202FDR	NS203FDR	NS204FDR	NS205FDR	NS206FDR	NS207FDR	NS208FDR	NS209FDR	NS210FDR
	Länge L mm length	62	84	106	128	150	172	194	216	238	260	282
	Gewicht ~kg weight ~kg	0,8	1,4	2,0	2,6	3,2	3,8	4,4	5,0	5,6	6,2	6,8

Spohn+Burkhardt
Elektrotechnische Fabrik Blaubeuren

Mauergasse 5
89143 BLAUBEUREN
GERMANY

Tel. +49 7344 171-0 info@spobu.de
Fax +49 7344 171-99 www.spobu.de

Meisterschalter NS2, im Silumingehäuse IP56
Controller NS2 cast enclosure (silumin) IP56

List 7 / 2014
M 10/7B

Mit Kugelgriff Kg2A
Deckel– und Anschlußschrauben nichtrostend
mit auswechselbaren Kontaktelementen und
Nockenscheiben, Abwicklung beliebig.

Ball handle Kg2A
cover and stainless steel screws
double contact elements and
cams replaceable, any circuits.

Maximaler Drehwinkel 120°
bei Wandmontage

Maximum lever angle 120°
wall–mounted

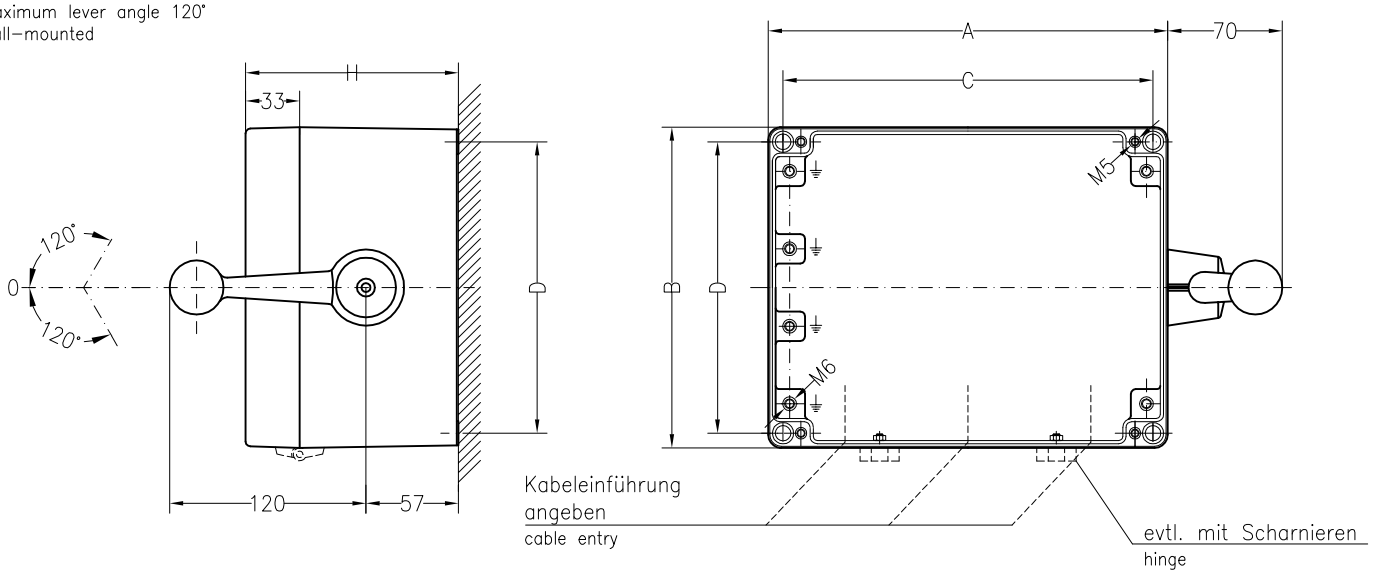

Fabrik Norm									Kabeleinführung cable entry		
mit Rastung notching		mit Selbstrückgang spring return									
normal normal	1) mit Heizung–Z und Pilztaste–P with heating–Z and emergency off button–P	normal normal	1) mit Heizung–Z und Pilztaste–P with heating–Z and emergency off button–P	A	B	C	D	H	oben above	unten below	Gew. ~kg weight
NS 207A G1	NS 207A GZP1	NS 207A GR1	NS 207A GRZP1	244	196	226	178	130			
NS 207A G2	NS 207A GZP2	NS 207A GR2									
NS 207A G3	NS 207A GZP3	NS 207A GR3									
NS 207A G4											
NS 207A G5											
NS 207A G6	NS 207A GZP4	NS 207A GR4	NS 207A GRZP2								
NS 207A G7	NS 207A GZP5	NS 207A GR5	NS 207A GRZP3								
NS 210A G8	NS 210A GZP6	NS 210A GR6		319	194	301	176	130			
NS 210A G9	NS 210A GZP7	NS 210A GR7									

letzte Zahl = Anzahl der eingebauten Doppelkontakte
last number = quantity of mounted double contact elements

1) Bitte Spannung angeben
please give supply voltage

Spohn + Burkhardt
Elektrotechnische Fabrik Blaubeuren

Mauergasse 5
89143 BLAUBEUREN
GERMANY

Tel. +49 7344 171-0 info@spobu.de
Fax +49 7344 171-99 www.spobu.de

Meisterschalter VNS2, stahlgekapselt IP54, mit Scharnierdeckel
Controllers VNS2, steel enclosure IP54, with hinged cover

List 7 / 2014
M 10/8

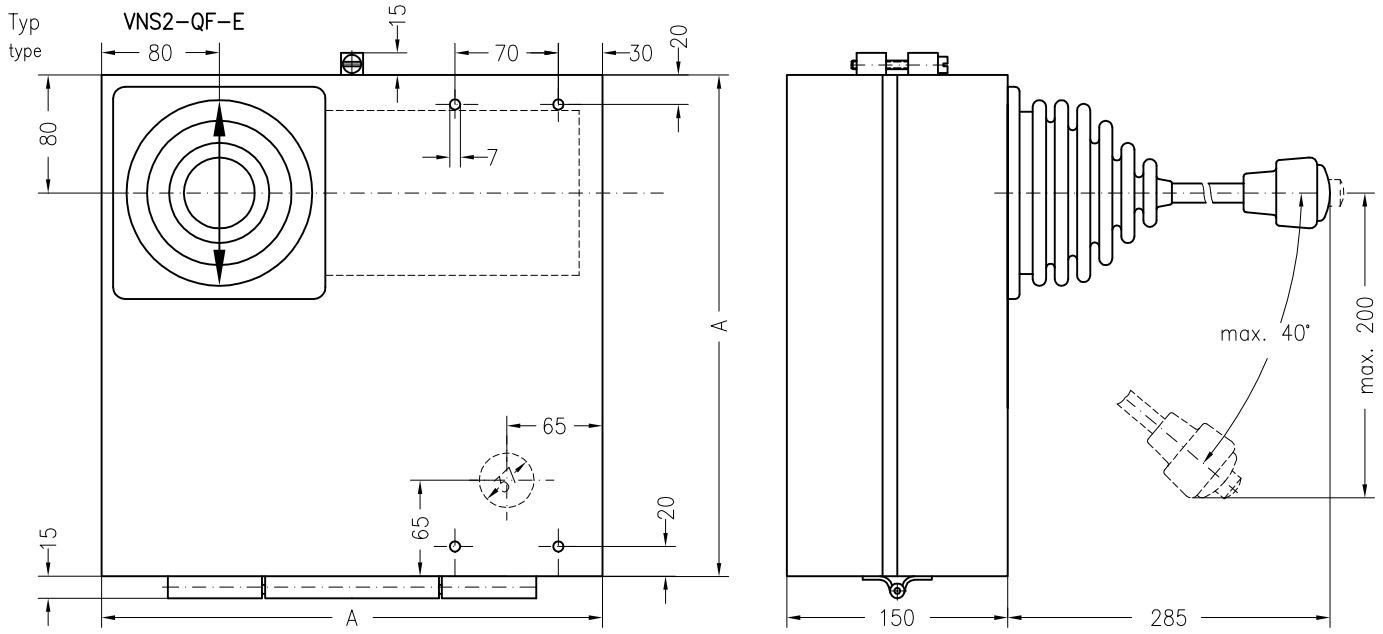

Typ type	MAß A dim.	Gewicht weight
VNS24 QF-E	290	14-17 kg
VNS26 QF-E	340	
VNS29 QF-E	380	

Anordnung
linke Hand (left) rechte Hand (right)

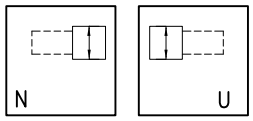

mounting arrangement

Schaltrichtung
linke Hand (left) rechte Hand (right)

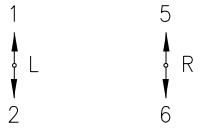

switch direction

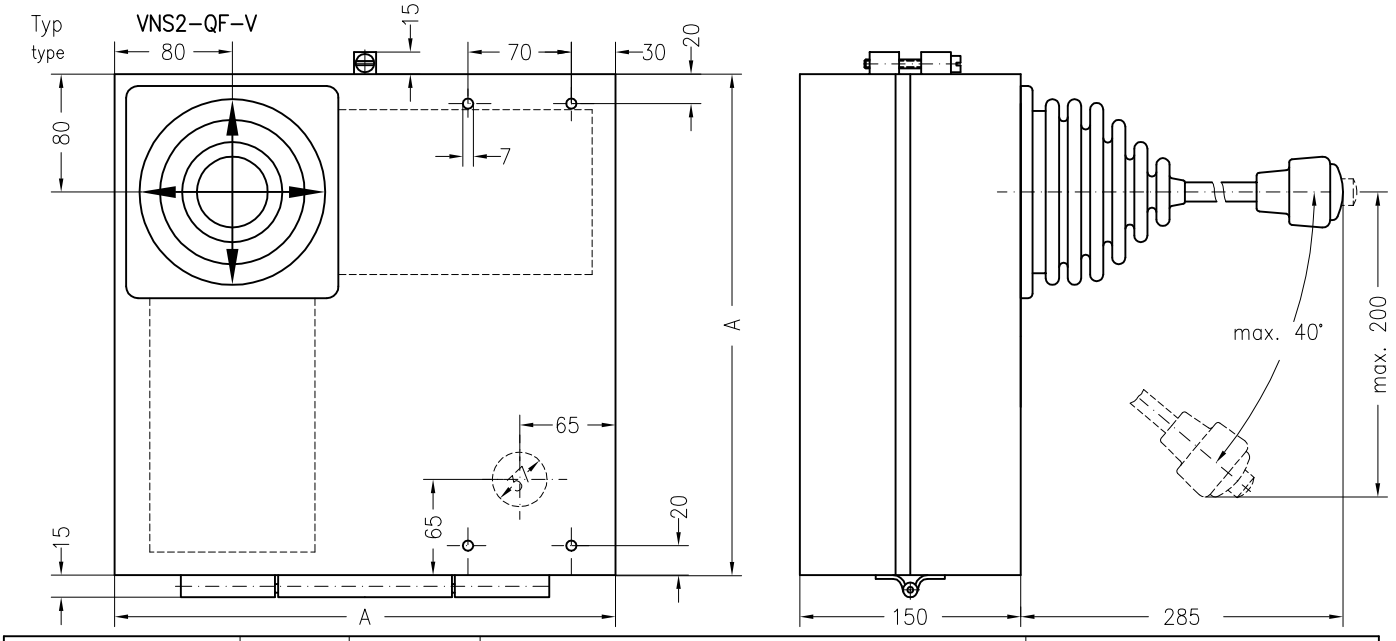

Typ type	MAß A dim.	Gewicht weight
VNS24 QF-V	290	17-20 kg
VNS26 QF-V	340	
VNS29 QF-V	380	

Anordnung
linke Hand (left) rechte Hand (right) linke Hand (left) rechte Hand (right)

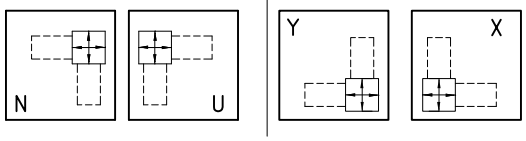

mounting arrangement

Schaltrichtung
linke Hand (left) rechte Hand (right)

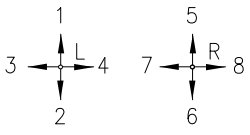

switch direction

Spohn + Burkhardt
Elektrotechnische Fabrik Blaubeuren

Mauergasse 5
89143 BLAUBEUREN
GERMANY

Tel. +49 7344 171-0 info@spobu.de
Fax +49 7344 171-99 www.spobu.de

Meisterschalter VNS2, stahlgekapselt IP54, mit Scharnierdeckel
Controllers VNS2, steel enclosure IP54, with hinged cover

List 7 / 2014
M 10/9

Typ / type: VNS2–LF–G NS2–LF––GG

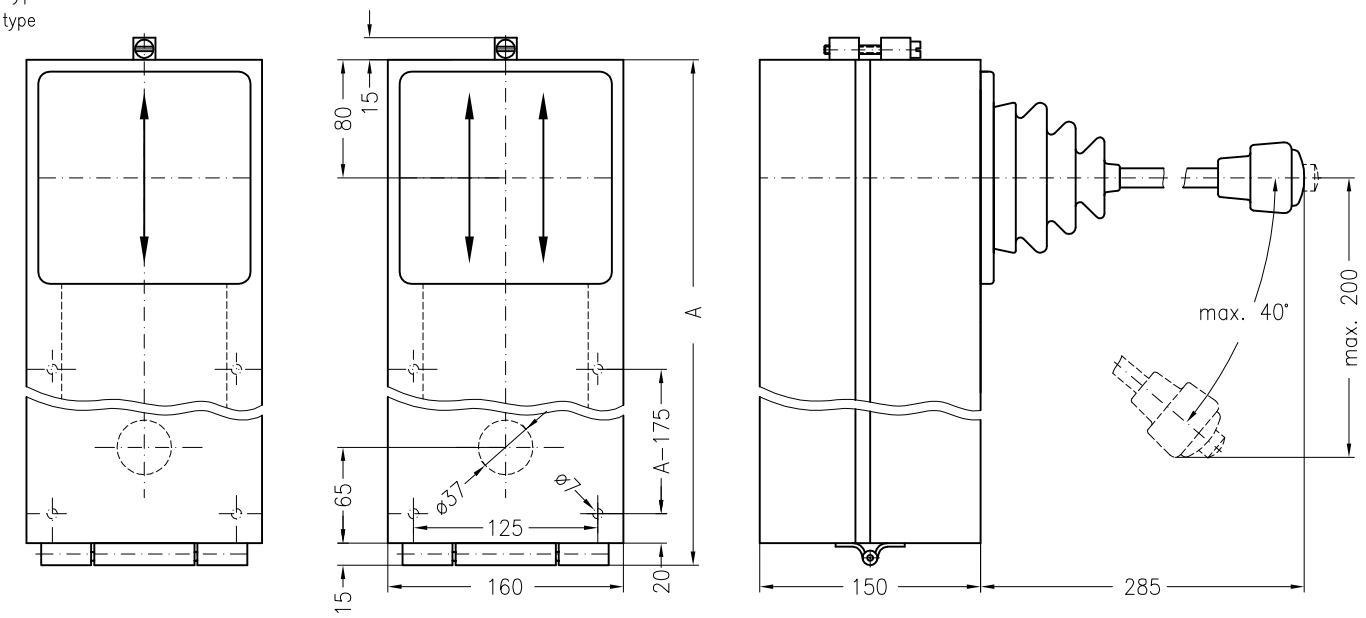

Typ / type		MAß A / dim.	Gewicht / weight	Schaltrichtung / switch direction: linke Hand / left	rechte Hand / right	linke Hand / left	rechte Hand / right
VNS26 LF–G	NS26 LF––GG	340		1 L 2	5 R 6	1 3 2 4	5 7 6 8
VNS29 LF–G	NS29 LF––GG	440	12–16 kg				
VNS214 LF–G	NS214 LF––GG	550					

Typ / type: VNS2–L(F)––H
ohne Typenzusatz F Bodenmontage

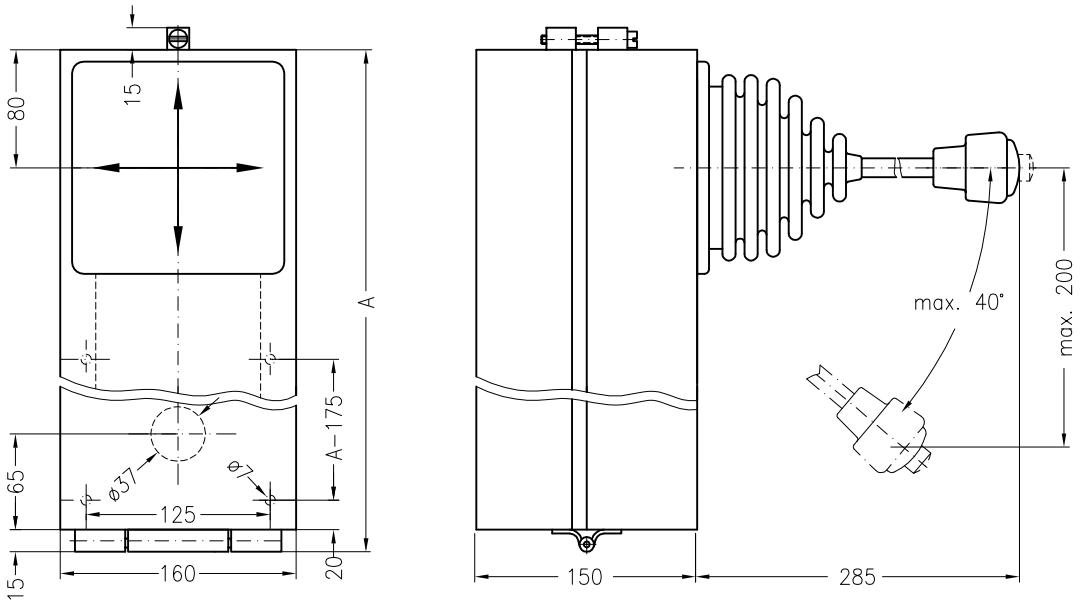

Typ / type		MAß A / dim.	Gewicht / weight		Schaltrichtung / switch direction: linke Hand / left	rechte Hand / right
VNS26 L(F)––H		340			1 3 L 4 2	5 7 R 8 6
VNS29 L(F)––H		440	12–16 kg			
VNS214 L(F)––H		550				

Spohn + Burkhardt
Elektrotechnische Fabrik Blaubeuren

Mauergasse 5
89143 BLAUBEUREN
GERMANY

Tel. +49 7344 171-0 info@spobu.de
Fax +49 7344 171-99 www.spobu.de

Fahr-/ Bremsschalter FBS-01

Drive-/Brake controller FBS-01

List 7 / 2014
M 11/1

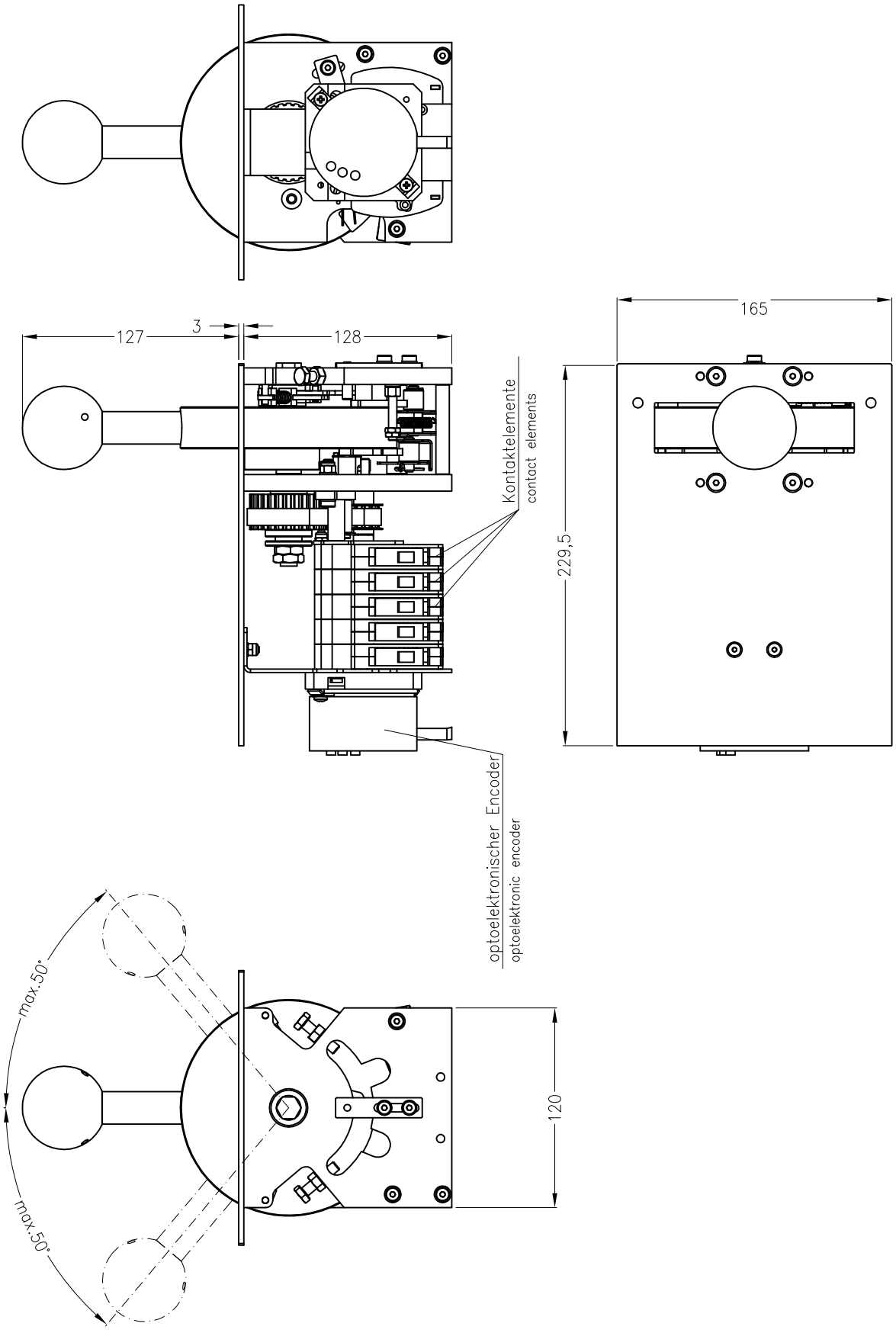

Spohn+Burkhardt
Elektrotechnische Fabrik Blaubeuren

Mauergasse 5
89143 BLAUBEUREN
GERMANY

Tel. +49 7344 171-0 info@spobu.de
Fax +49 7344 171-99 www.spobu.de

Fahr–/ Bremsschalter FBS–01
mit Schlüssel– und Richtungswahlschalter
Drive–/Brake controller FBS–01 with key switch and direction selector switch

List 7 / 2014
M 11/2

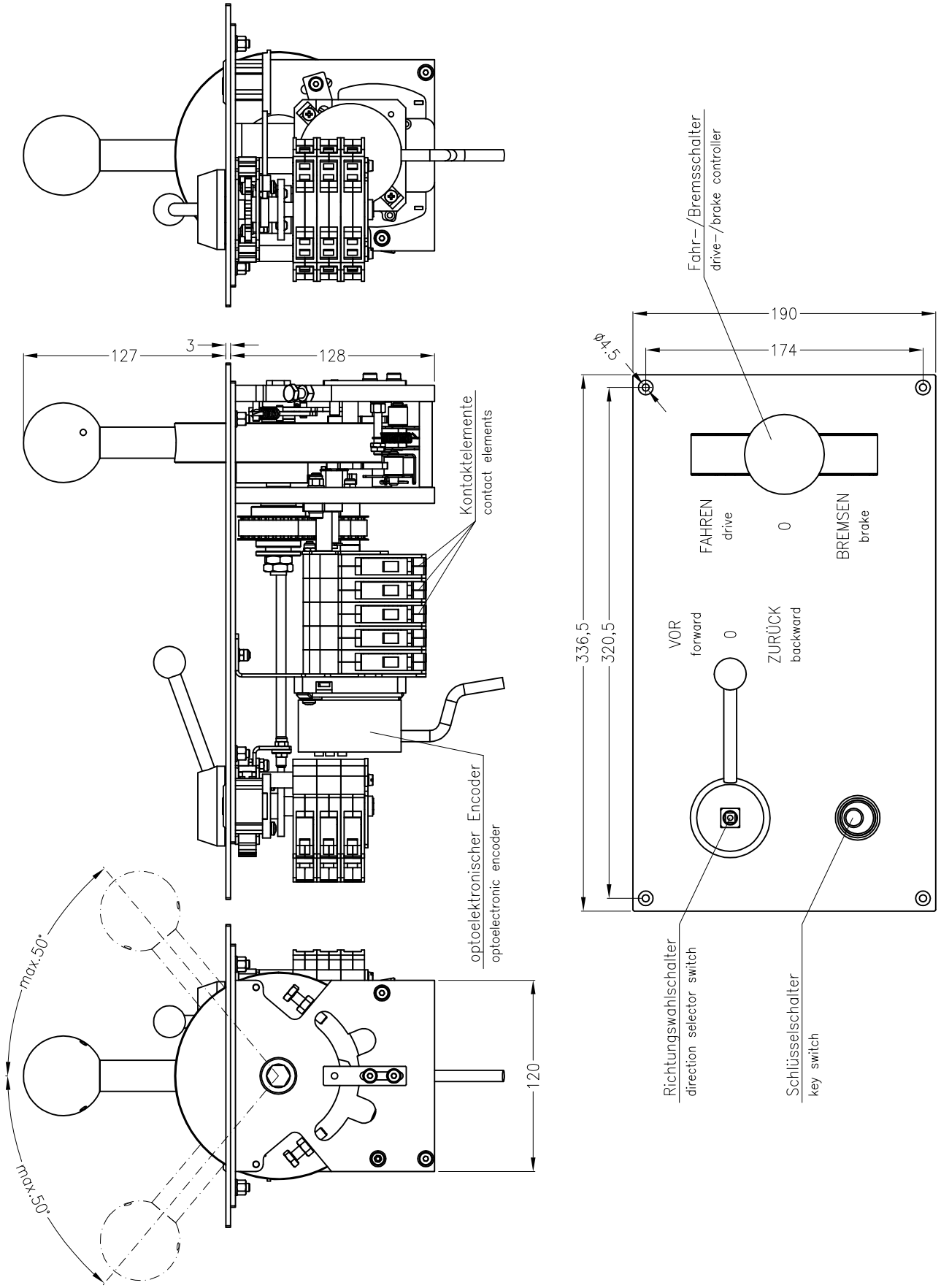

Spohn+Burkhardt
Elektrotechnische Fabrik Blaubeuren

Mauergasse 5
89143 BLAUBEUREN
GERMANY

Tel. +49 7344 171-0 info@spobu.de
Fax +49 7344 171-99 www.spobu.de

Tragbare Kleinsteuerpulte TC011, isogekapselt IP65
Portable control station TC011, degrees of protection IP65

List 7 / 2014
M 20/1-2

Typ TC011
type
Material: PA66 gelb
material: PA66 yellow

Einbaumöglichkeiten:

2 Verbundmeisterschalter VCS0
mit Rastung oder Selbstrückgang
1–0–1 bis 6–0–6 Stellungen
+ Schloß–Schlagtaste, Normaltaste,
Meldelampe. (insges. 8 Einheiten)
Schaltungen nach S 40/4

Installations:

2 two–axis controllers VCS0
with stayput or spring return
1–0–1 or 6–0–6 positions
+ emergency push button with key, pushbuttons,
lamps (up to 8 units)
circuit see S 40/4

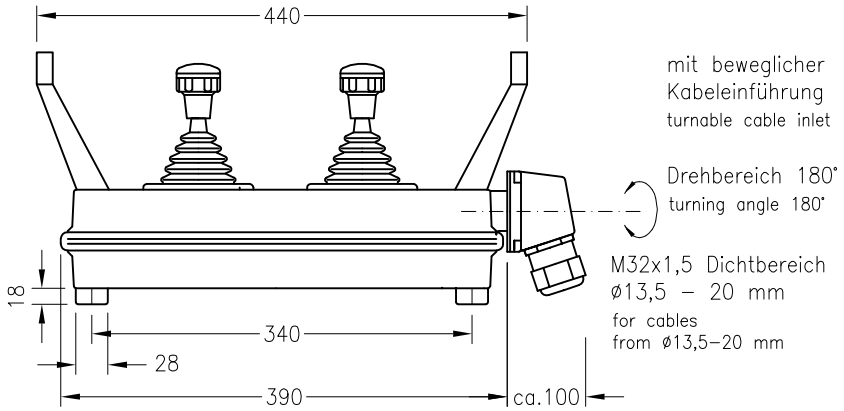

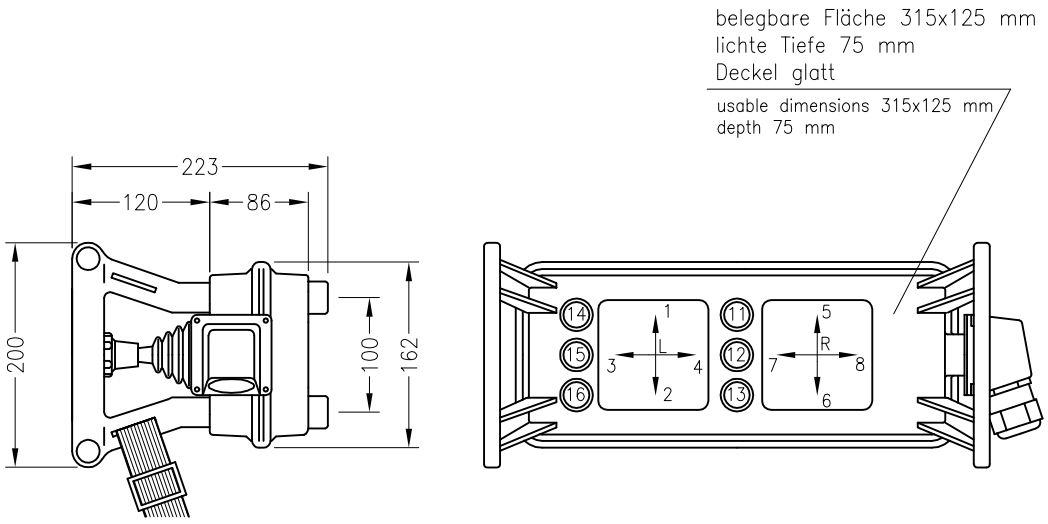

Spohn+Burkhardt
Elektrotechnische Fabrik Blaubeuren

Mauergasse 5
89143 BLAUBEUREN
GERMANY

Tel. +49 7344 171-0 info@spobu.de
Fax +49 7344 171-99 www.spobu.de

Tragbares Steuerpult IDV–CS065
Portable control station IDV–CS065

List 7 / 2014
M 20/4

Typ type IDV–CS065 mit Meisterschalter VCS0, with controller VCS0
Typ type IDV–NS33 mit Meisterschalter VNS0, with controller VNS0

Material: GFK gelb, Schutzart IP65
material: GFK yellow, degrees of protection IP65

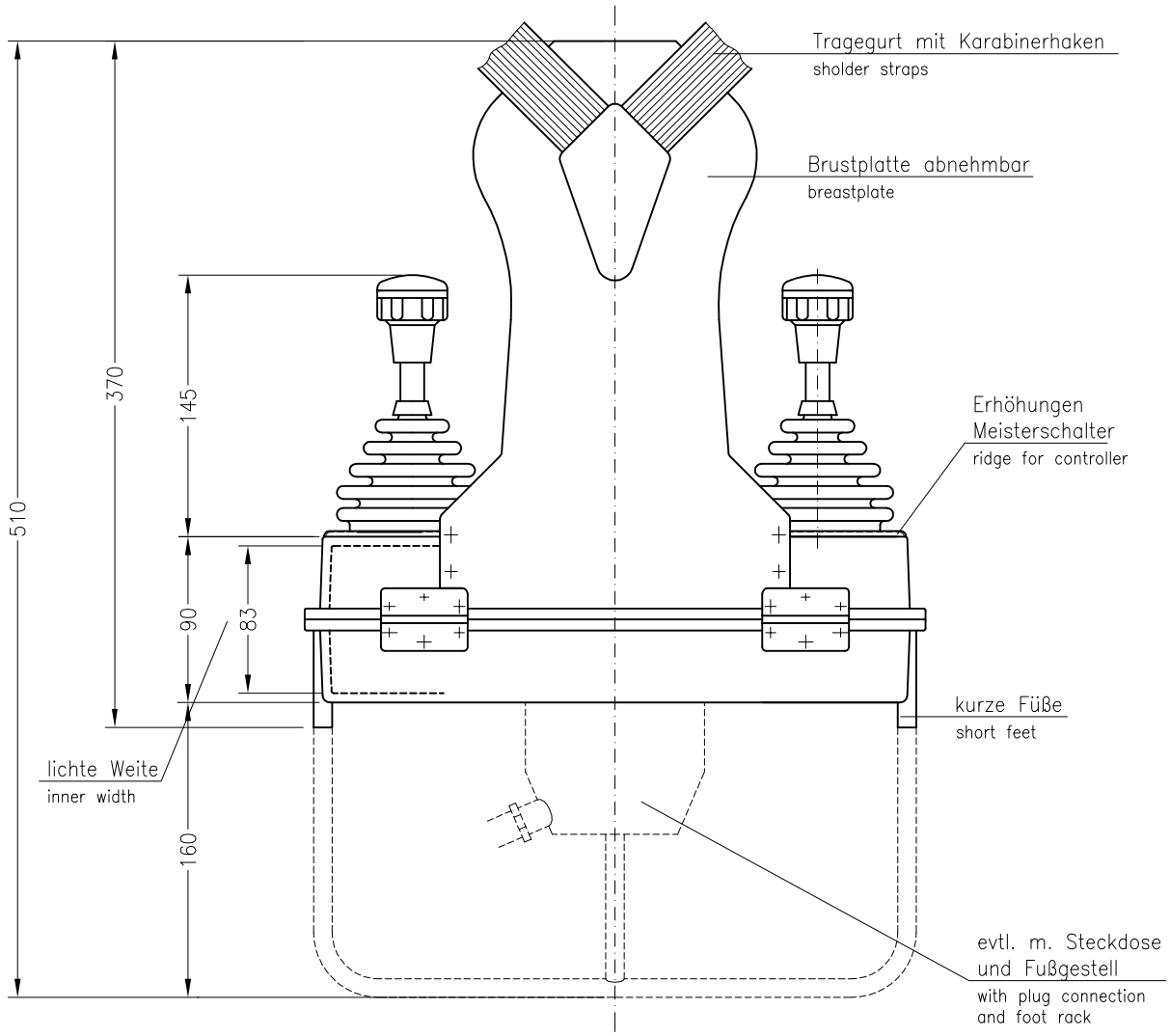

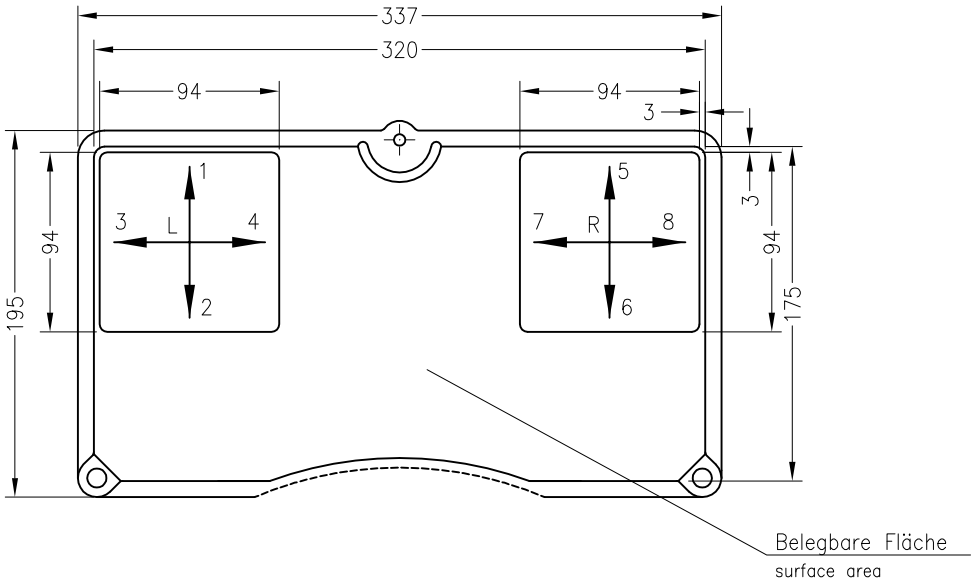

Spohn+Burkhardt
Elektrotechnische Fabrik Blaubeuren

Mauergasse 5
89143 BLAUBEUREN
GERMANY

Tel. +49 7344 171-0 info@spobu.de
Fax +49 7344 171-99 www.spobu.de

Tragbares Steuerpult T–56 mit Schaltern VCS0 oder VNS0
Portable control station T–56 with controllers VCS0 or VNS0

List 7 / 2014
M 20/5

Material: GFK gelb, Schutzart IP65
material: GFK yellow, degrees of protection IP65

Ersatztype für IDV NS56R
alternative type for IDV NS56R

evtl. abschraubbare Brustplatte
mit Tragegurt und Gurtschieber
breastplate with shoulder straps

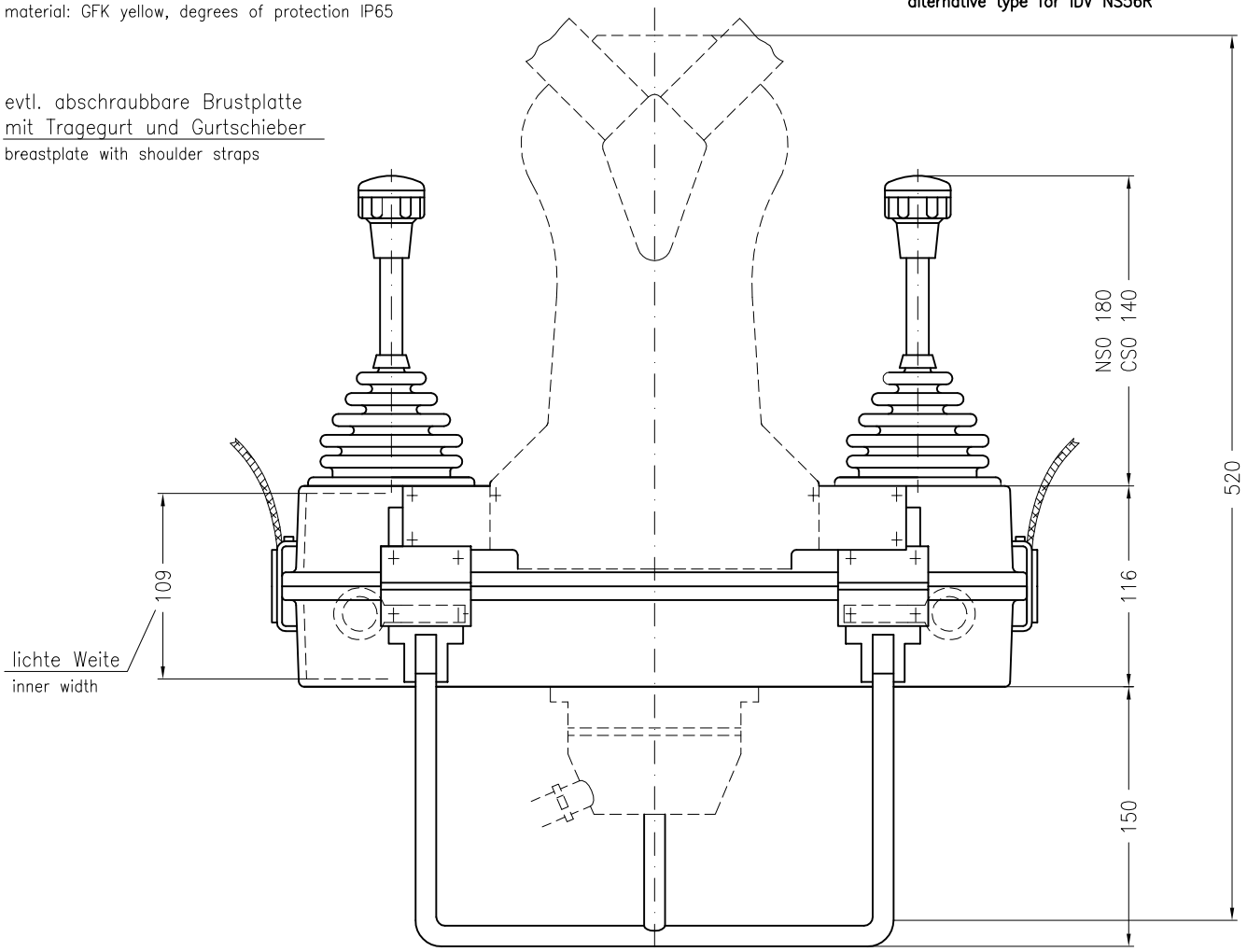

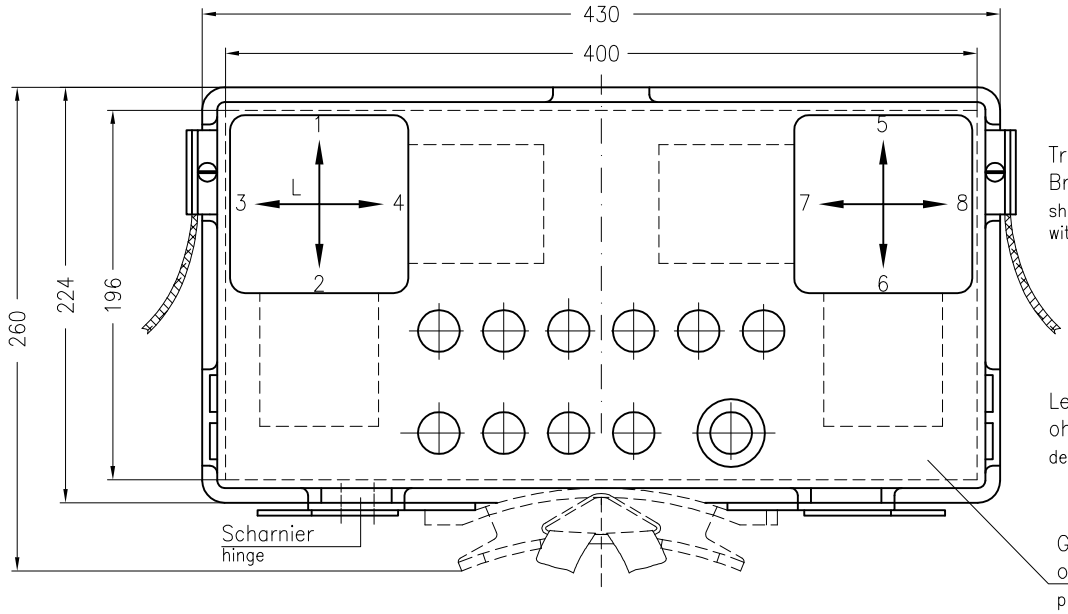

Tragegurt ohne Brustplatte
shoulder straps without breastplate

Leergewicht ohne Fußgest. ~3,1 kg
dead weight

Glatte Einbaufläche ohne Rippen
plane surface without ribs

Typenschlüssel siehe 20/5
ordering example see 20/5

Spohn + Burkhardt
Elektrotechnische Fabrik Blaubeuren

Mauergasse 5
89143 BLAUBEUREN
GERMANY

Tel. +49 7344 171-0 info@spobu.de
Fax +49 7344 171-99 www.spobu.de

Transportables Pult T97A, Alugehäuse, Schutzart IP65
Portable control station T97A, aluminium, protection IP65

List 7 / 2014
M 20/6

Gelbe Pulverbeschichtung
Yellow powder coating

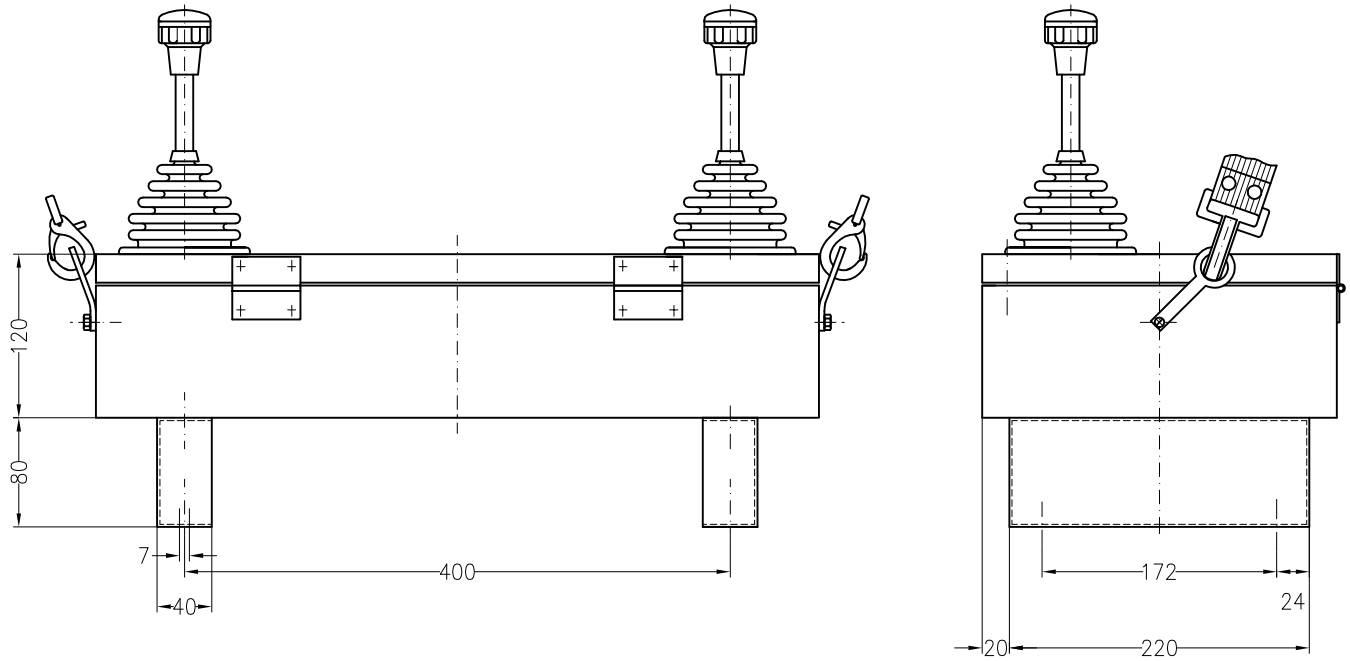

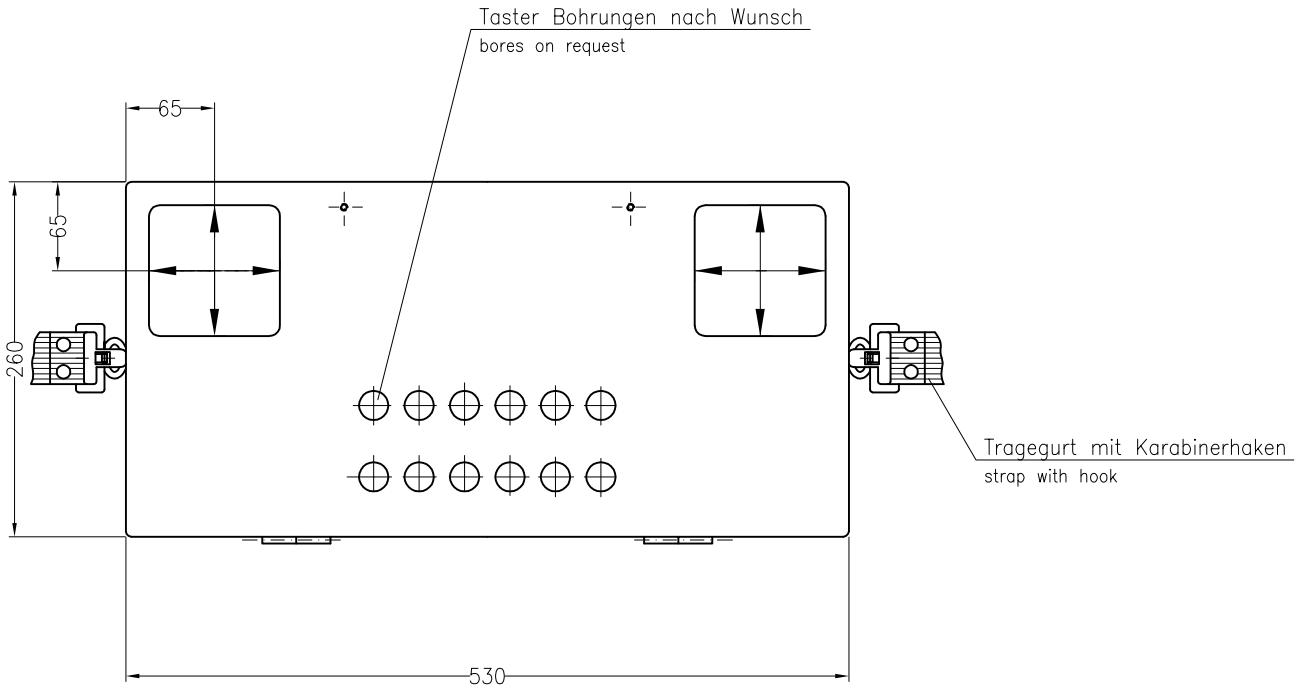

Kabeleinführung nach Wunsch.
Leergewicht ohne Einbauten ~5 kg
Andere Abmessungen auf Anfrage.
cable entry on request
net weight ~5 kg
other dimensions on request

Spohn+Burkhardt
Elektrotechnische Fabrik Blaubeuren

Mauergasse 5
89143 BLAUBEUREN
GERMANY

Tel. +49 7344 171-0 info@spobu.de
Fax +49 7344 171-99 www.spobu.de

Tragbares Steuerpult T–022A, isogekapselt IP65
Portable control station T–022A, degrees of protection IP65

List 7 / 2014
M 20/8

Typ type TM022A mit Meisterschaltern M0, with controllers M0
Typ type TC022A mit Meisterschaltern VCS0, with controllers VCS0

Material: PA66 gelb
material: PA66 yellow

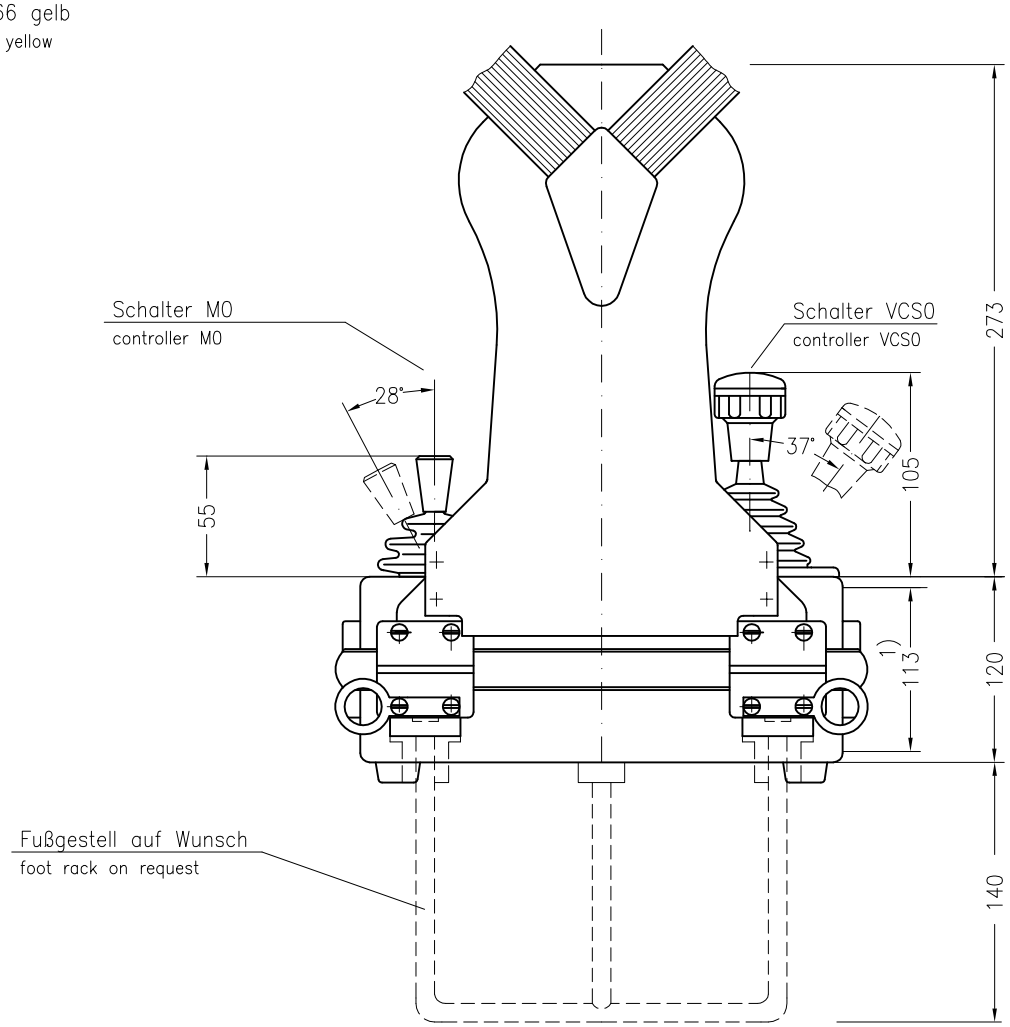

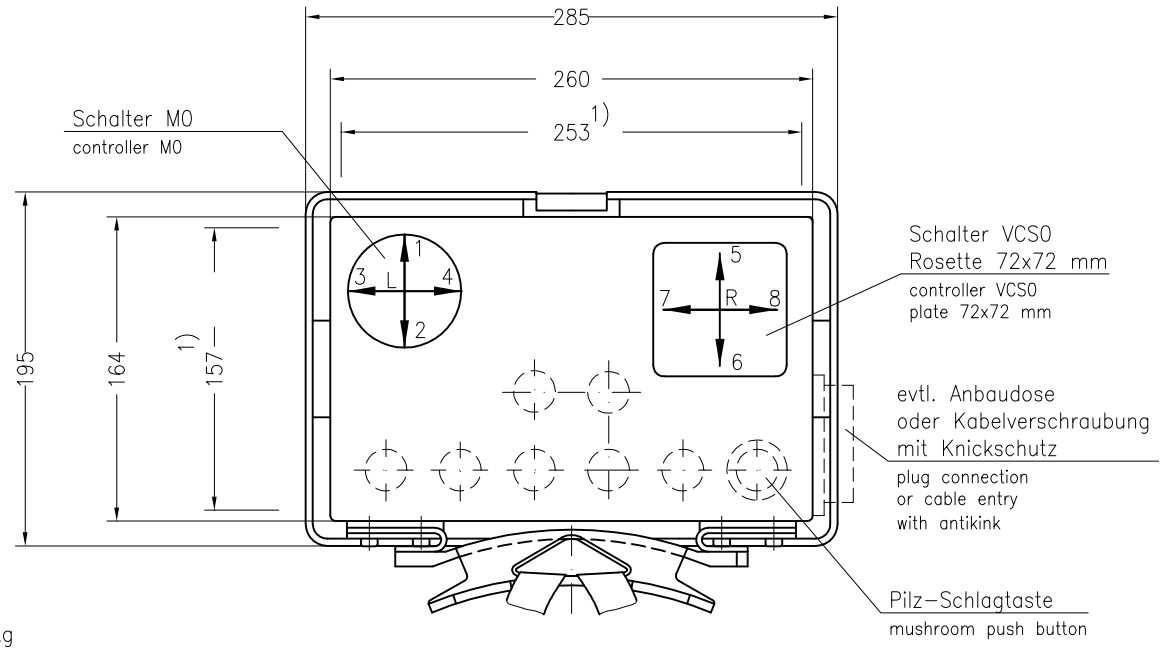

1) lichte Weite
1) inner width

Gewicht: ~ 3 kg
weight: ~ 3 kg

Spohn+Burkhardt
Elektrotechnische Fabrik Blaubeuren

Mauergasse 5
89143 BLAUBEUREN
GERMANY

Tel. +49 7344 171-0 info@spobu.de
Fax +49 7344 171-99 www.spobu.de

Tragbares Steuerpult TP022, TP022A, IP65
Portable control station TP022, TP022A, IP65

List 7 / 2014
M 20/9

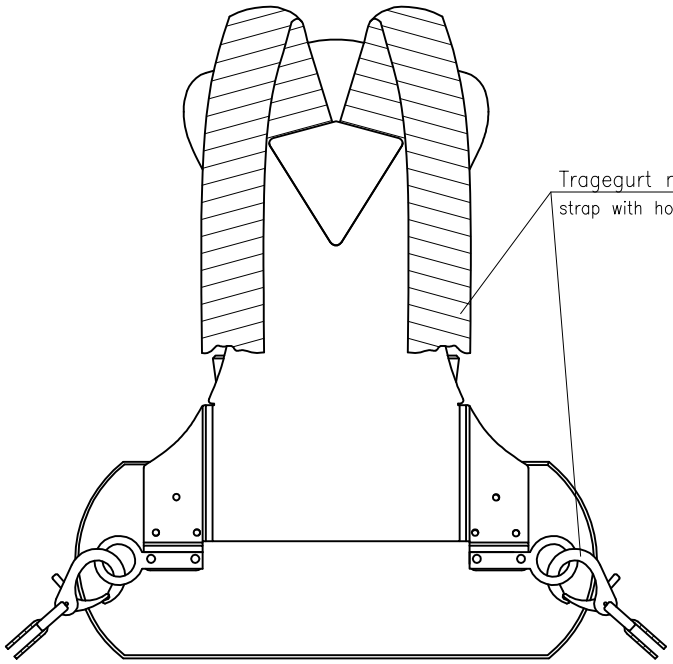

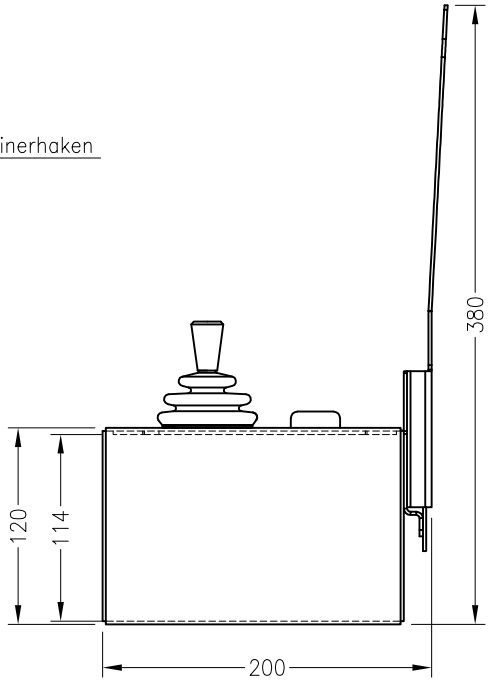

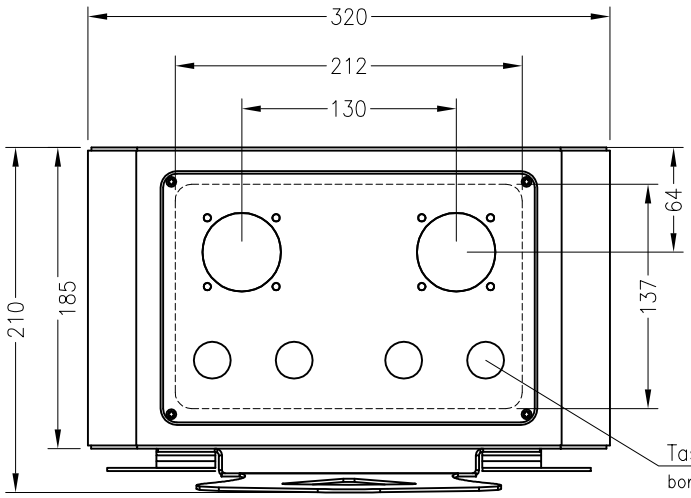

Belegbare Fläche 212x137 mm
lichte Tiefe 114 mm
Deckel eben
surface area 212x137 mm
depth 114 mm
cover plane

Taster Bohrungen nach Wunsch
bores on request

Kabeleinführung nach Wunsch

Leergewicht ohne Einbauten:	Aluminium	ca. 1,7 kg
	Stahlblech	ca. 3,3 kg

Andere Abmessungen auf Anfrage

cable entry on request

net weight :	aluminium	ca. 1,7kg
	steel	ca. 3,3 kg

other dimensions on request

Spohn+Burkhardt
Elektrotechnische Fabrik Blaubeuren

Mauergasse 5
89143 BLAUBEUREN
GERMANY

Tel. +49 7344 171-0 info@spobu.de
Fax +49 7344 171-99 www.spobu.de

Hängetafel HC 011 isogekapselt IP65

Pendant HC 011, protection IP65

List 7 / 2014
M 21/1

Typ **HC 011**
type
Material: PA66 gelb
material: PA66 yellow

Einbaumöglichkeiten:

2 Verbundmeisterschalter VCS0
10 A mit Rastung und Selbstrückgang
1–0–1 bis 6–0–6 Stellungen
Schaltungen nach S 40/4, S 40/5
+ Schloß–Schlagtaste, Normaltasten und
Meldelampen (insgesamt 8 Einheiten)

Installations:

2 two axis controllers VCS0
10 A with stayput or spring return
1–0–1 to 6–0–6 positions
circuit see S 40/4, S 40/5
+ emergency push button, push buttons,
lamps (up to 8 units)

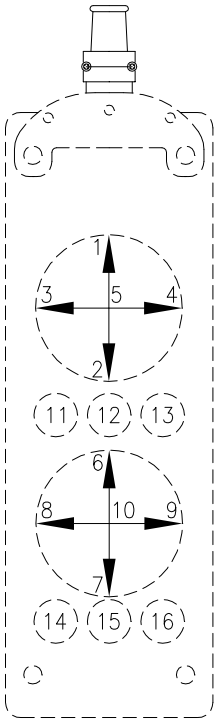

Belegbare Fläche 315x125 mm,
lichte Tiefe 70 mm,
Deckel eben
surface area 315x125 mm,
depth 70 mm
cover plane

Kabeleinführung Pg 21, Pg 29
Kabel max. ø24 mm
cable entry Pg 21, Pg 29
for cable max. ø24 mm

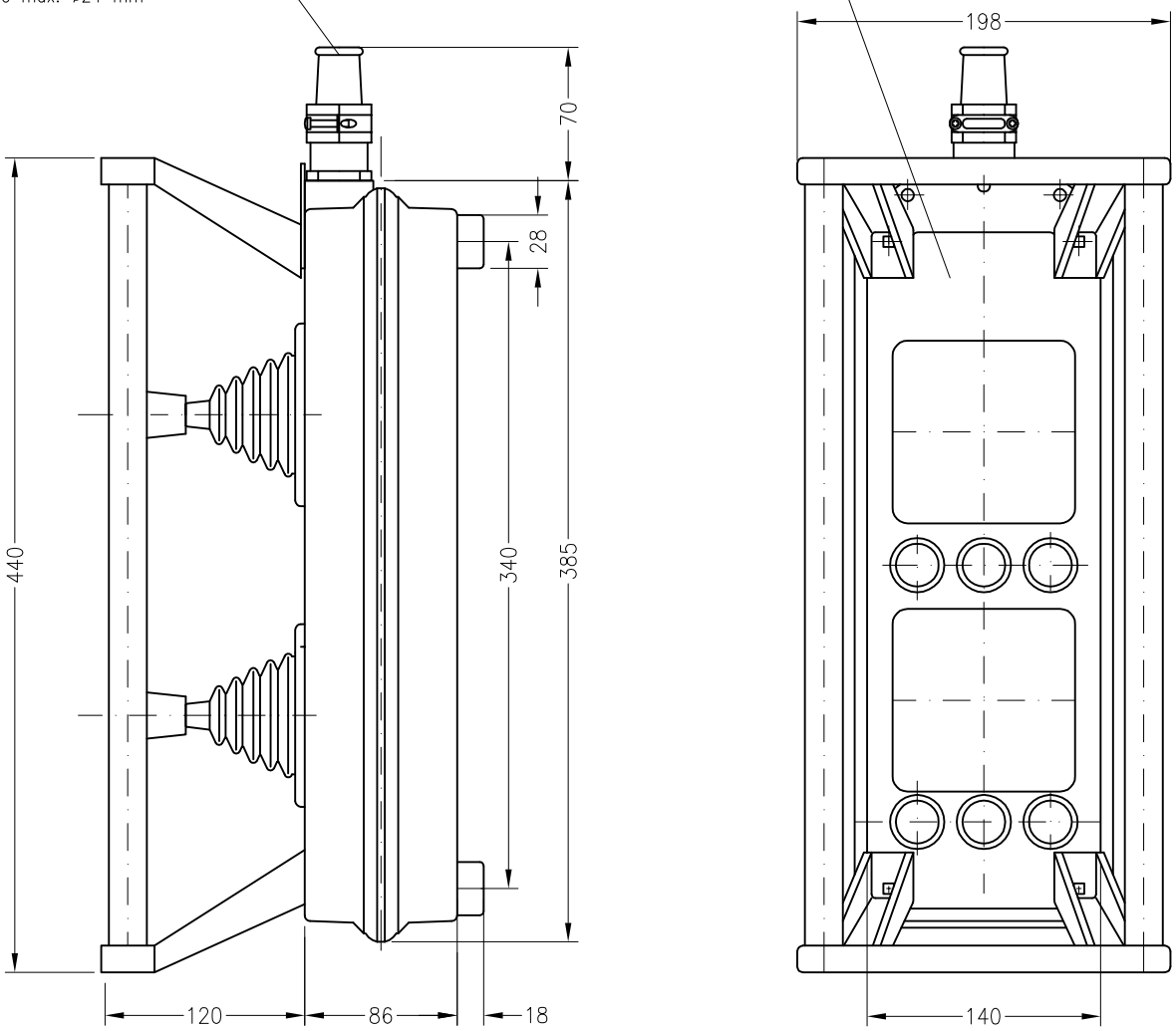

Spohn + Burkhardt
Elektrotechnische Fabrik Blaubeuren

Mauergasse 5
89143 BLAUBEUREN
GERMANY

Tel. +49 7344 171-0 info@spobu.de
Fax +49 7344 171-99 www.spobu.de

Hängetafel HV, HBV
Pendant HV, HBV

List 7 / 2014
M 21/3

Ausführung: Standard IP54, auf Anfrage IP65

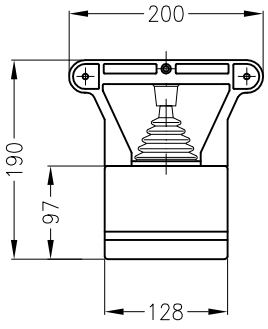

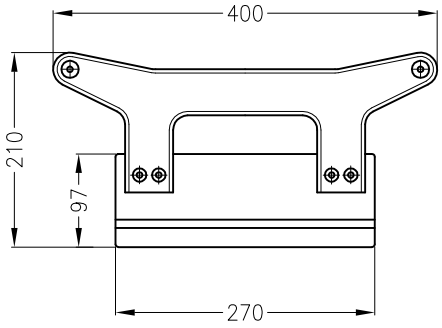

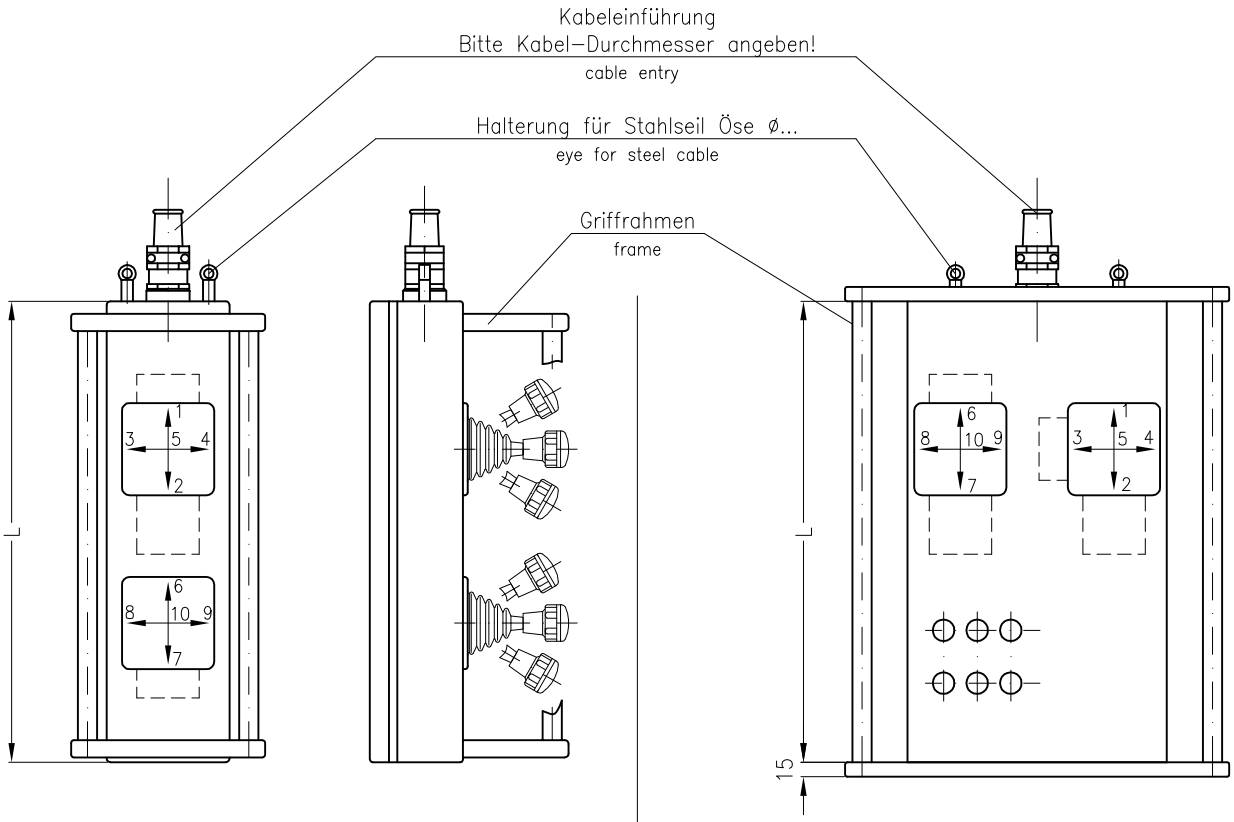

Typ type	L/mm
HV29	290
HV35	350
HV48	480
HV60	600
HV70	700

Typ type	L/mm
HBV35	350
HBV48	480
HBV60	600
HBV70	700

Einbaubeispiele
Installations



Andere Anordungen und Größe auf Wunsch
on request other dimensions and arrangements available

Spohn+Burkhardt
Elektrotechnische Fabrik Blaubeuren

Mauergasse 5
89143 BLAUBEUREN
GERMANY

Tel. +49 7344 171-0 info@spobu.de
Fax +49 7344 171-99 www.spobu.de

Hänge–Druckknopftafel HD, Stahlblech, IP65
Pendant HD, made of sheet steel, IP65

List 7 / 2014
M 21/5

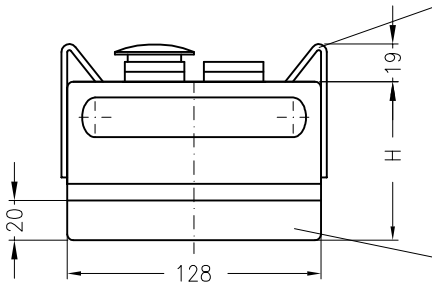

Griff– u. Schutzleiste
support frame

H = 80 für Kabelverschraubung bis M32x1,5
for cable glands up to M32x1,5

H = 95 für Kabelverschraubung bis M40x1,5
for cable glands up to M40x1,5

geschraubter Deckel
screwed cover

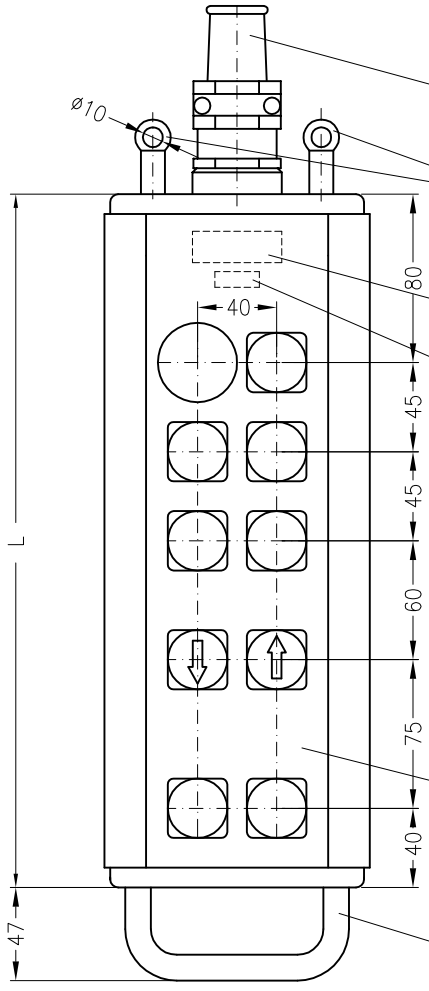

Bei Bestellung
bitte Kabeldurchmesser angeben
in case of order please advice cable diameter

Ösen für Stahlseilaufhängung
mechanical support bracket

Kabel–Klemmschelle
cable clamp

Schelle für Kabel–Tragseele
additional cable support

Stahlblech kieselgrau RAL 7032 gepulvert
andere Farbe auf Anfrage
sheet steel pebble grey RAL 7032 powder coated
other colours on request

Aluminium Haltegriff
aluminium handle

Baugröße type	L / mm Maß dimension	Mögliche Anzahl Befehlsgeräte ø22,5 mm number of control devices	Gewicht ~kg weight ~ kg
HD19	190	6	1,8
HD29	290	10	2,5
HD35	350	12	4,0
HD48	480	18	5,0
HD60	600	22	6,0

andere Größen auf Anfrage
other sizes on request

Spohn+Burkhardt
Elektrotechnische Fabrik Blaubeuren

Mauergasse 5
89143 BLAUBEUREN
GERMANY

Tel. +49 7344 171-0 info@spobu.de
Fax +49 7344 171-99 www.spobu.de

Pulthälften NS0PK, isogekapselt IP54
Console units NS0PK, degrees of protection IP54

List 7 / 2014
M 22/1

Rechteckige Iso-Pulte IP54
normal grau, auf Wunsch gelb oder schwarz antistatisch.
rectangular fiberglass console IP 54
normally grey, on request yellow or black surface<10^9 Ohm

NS0PKU-
rechts
right

NS0PKN-
links
left

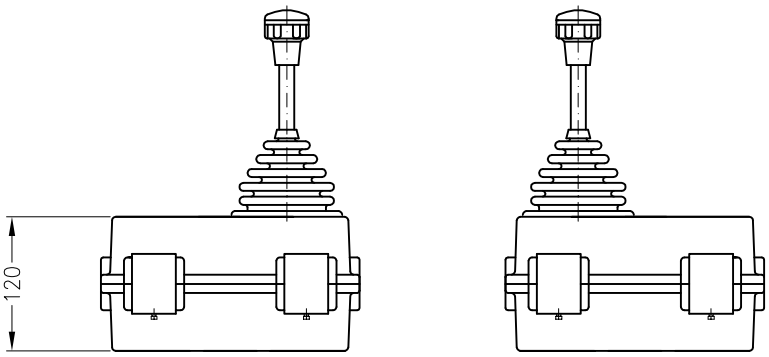

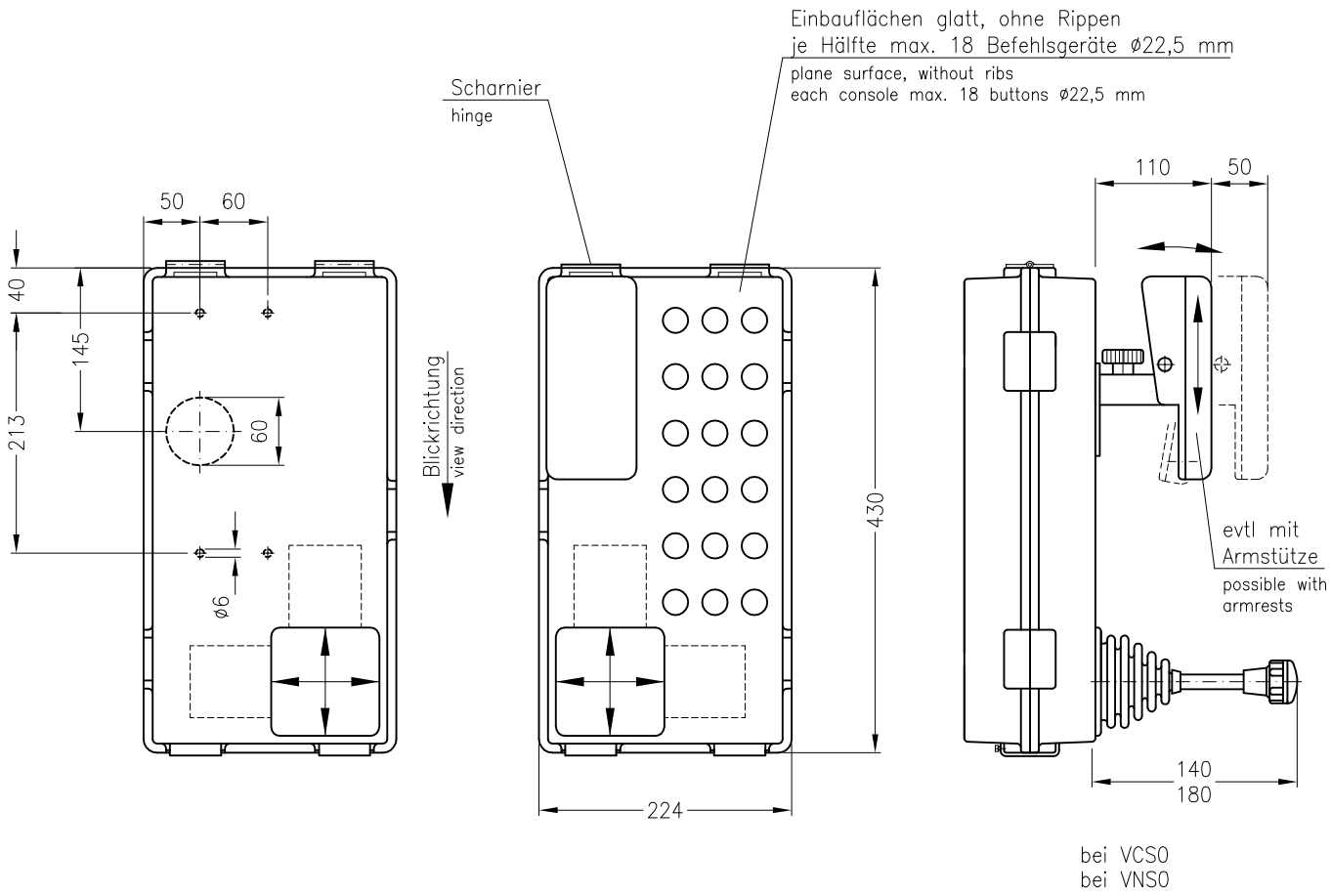

auf Wunsch andere oder
ohne Befestigungsbohrungen
on request other or without
fixing holes

Spohn+Burkhardt
Elektrotechnische Fabrik Blaubeuren

Mauergasse 5
89143 BLAUBEUREN
GERMANY

Tel. +49 7344 171-0 info@spobu.de
Fax +49 7344 171-99 www.spobu.de

Mit Klappsitz KSGF nach M 22/8A
with collapsible chair KSGF, M 22/8A

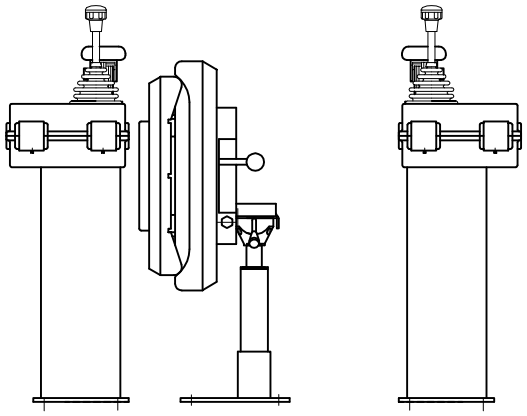

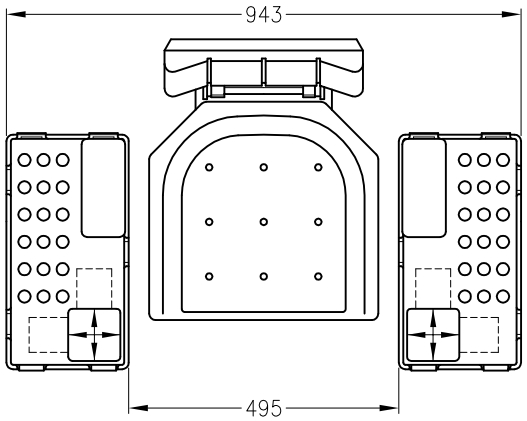

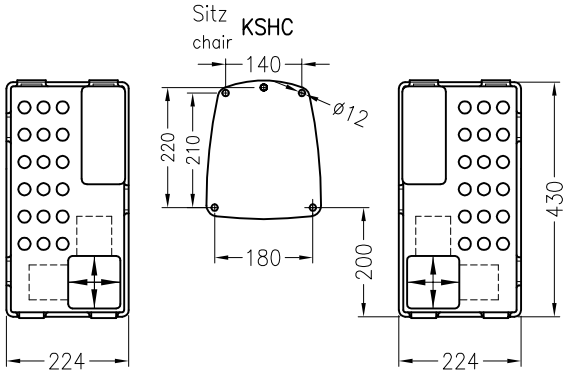

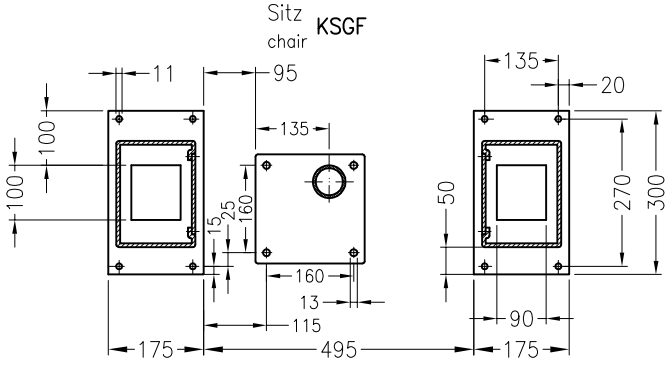

Mit Klappsitz KSHC nach M 22/8B
with collapsible chair KSHC, M 22/8B

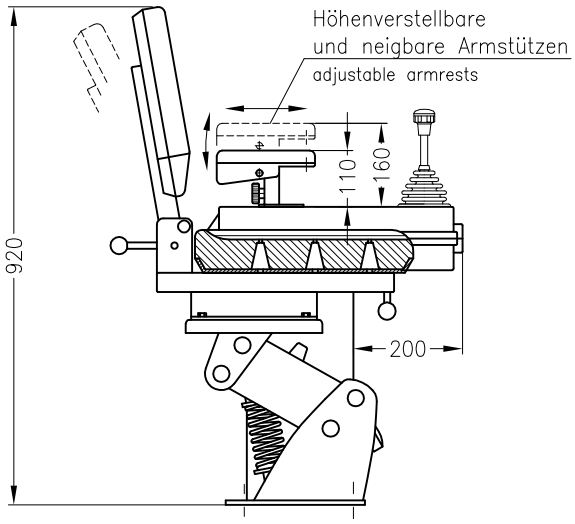

Typ Type	Ausführung Version
SV0K	mit rechteckigen Iso-Pultaufsätzen je Pulthälfte max. 18 Befehlsgeräte ø22,5 mm with rectangular fiberglass consoles SV0K each console max. 18 push buttons ø22,5 mm

Iso-Pulte grau
lackierte Konsole Standard: RAL 7032 grau
Iso-console units: grey
coated console standard: RAL 7032 grey

Stahlblech Pultaufsätze auf Anfrage
steel consoles on request

Gewicht ~40 kg
weight ~40 kg

Spohn + Burkhardt
Elektrotechnische Fabrik Blaubeuren

Mauergasse 5
89143 BLAUBEUREN
GERMANY

Tel. +49 7344 171-0 info@spobu.de
Fax +49 7344 171-99 www.spobu.de

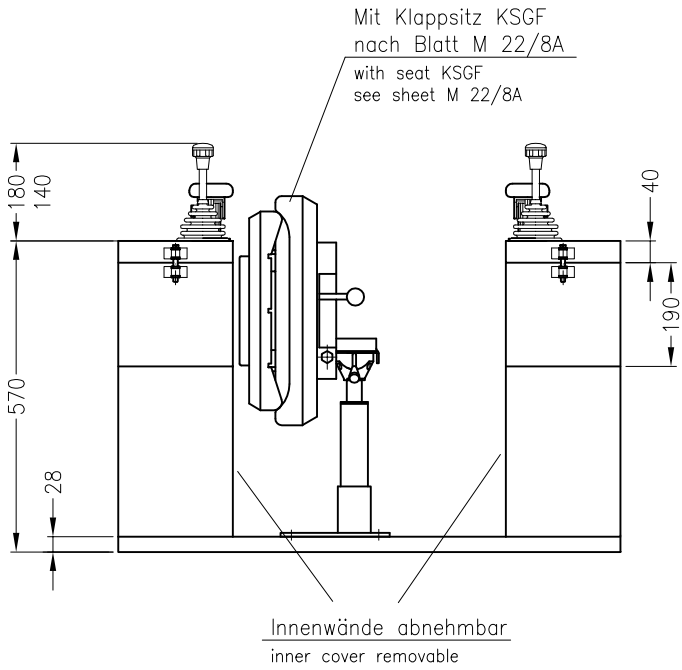

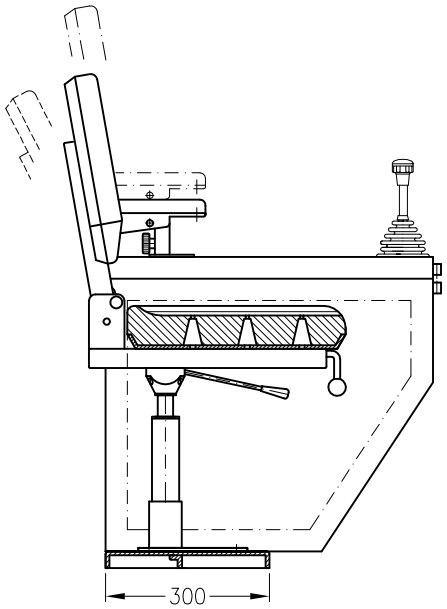

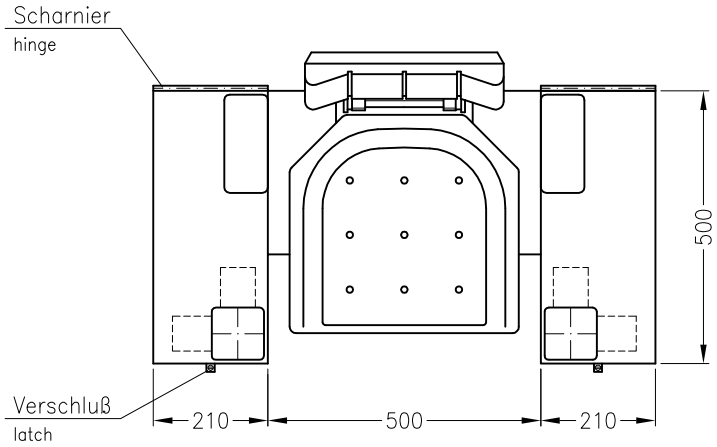

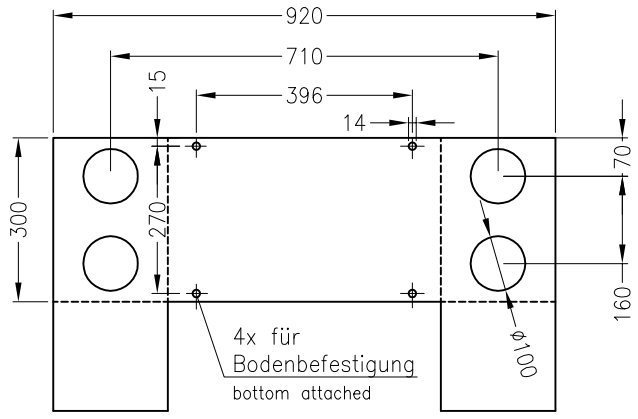

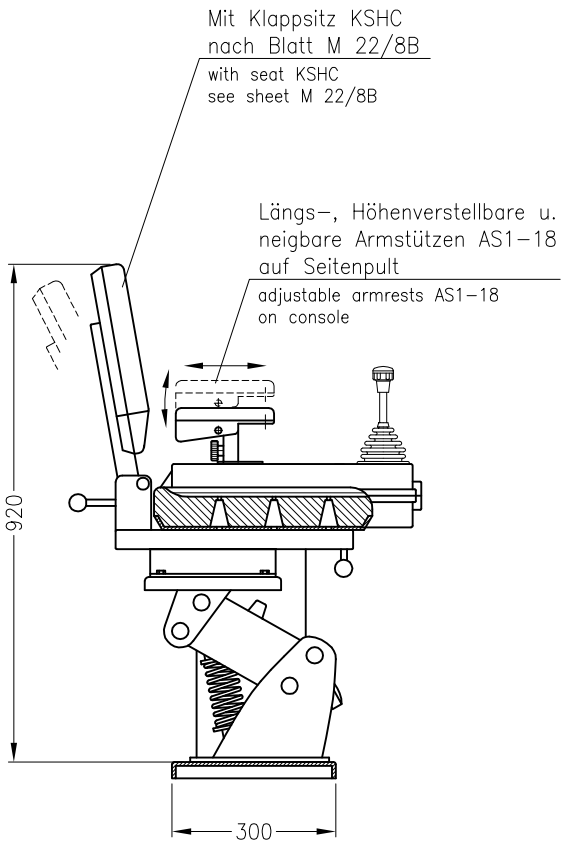

Seitenpulte, Brücke und
Sitzkonsole aus Stahlblech
desks, base and consoles made by steel plate

Andere Pultgröße auf Wunsch
other console size on request

Standard: grau gepulvert
standard: grey powdered

Spohn+Burkhardt
Elektrotechnische Fabrik Blaubeuren

Mauergasse 5
89143 BLAUBEUREN
GERMANY

Tel. +49 7344 171-0 info@spobu.de
Fax +49 7344 171-99 www.spobu.de

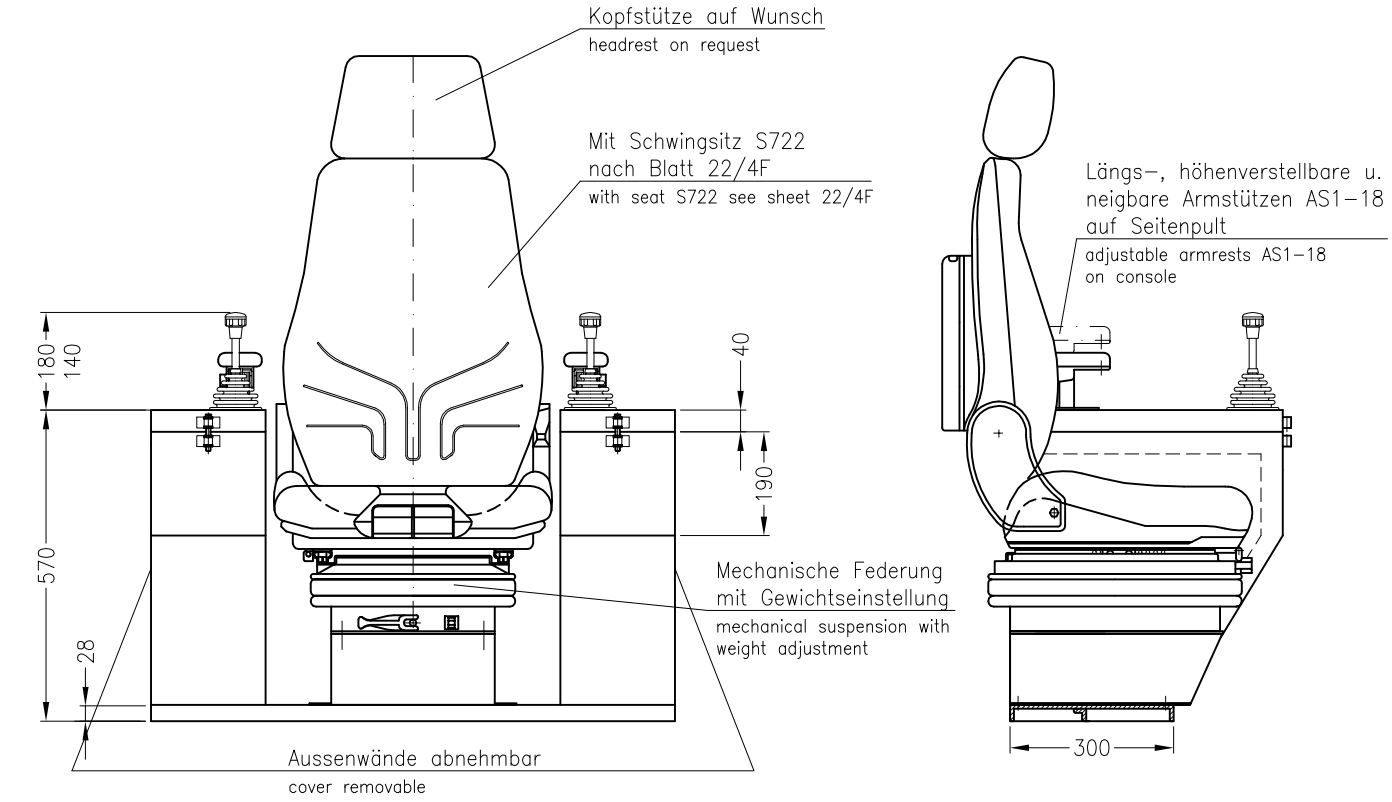

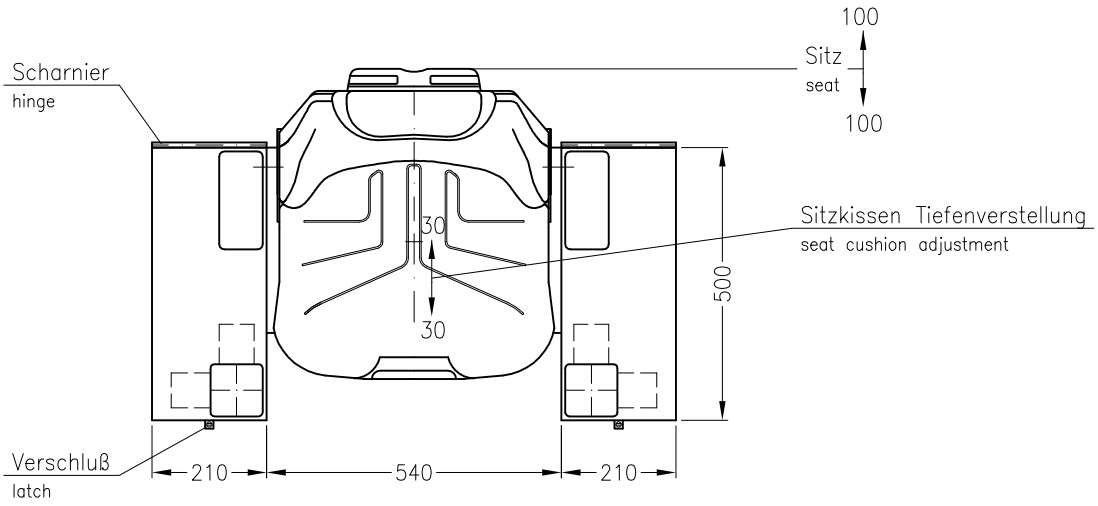

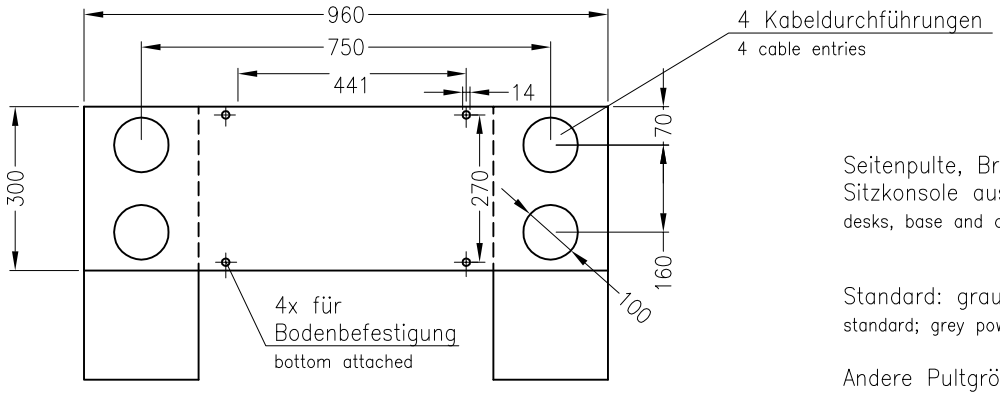

Seitenpulte, Brücke und
Sitzkonsole aus Stahlblech
desks, base and consoles made by steel plate

Standard: grau gepulvert
standard; grey powdered

Andere Pultgröße auf Wunsch
other console size on request

Spohn+Burkhardt
Elektrotechnische Fabrik Blaubeuren

Mauergasse 5
89143 BLAUBEUREN
GERMANY

Tel. +49 7344 171-0 info@spobu.de
Fax +49 7344 171-99 www.spobu.de

Mit Klappsitz KSGF nach M 22/8A
with collapsible chair KSGF, M 22/8A

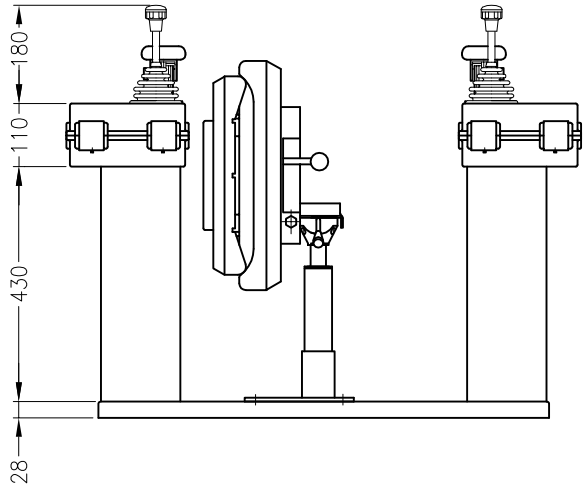

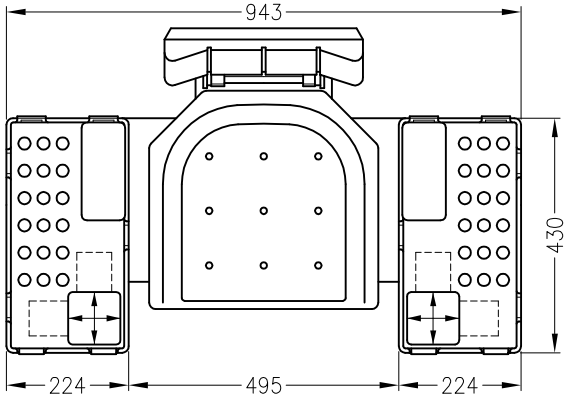

Mit Klappsitz KSHC nach M 22/8B
with collapsible chair KSHC, M 22/8B

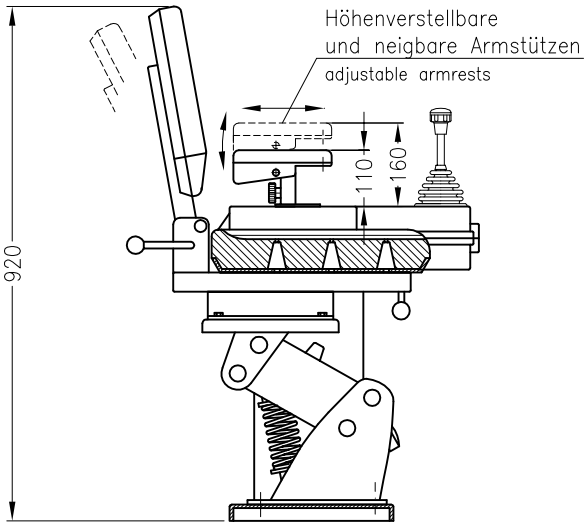

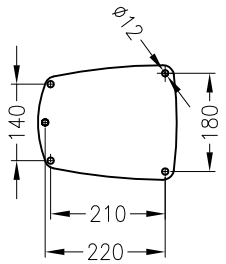

Typ Type	Ausführung Version
SV0BK	mit rechteckigen Iso-Pultaufsätzen je Pulthälfte max. 18 Befehlsgeräte ø22,5 mm with rectangular fiberglass consoles SV0K each console max. 18 push buttons ø22,5 mm

mit Stahlblechpulten 300x600x130
with steel consoles

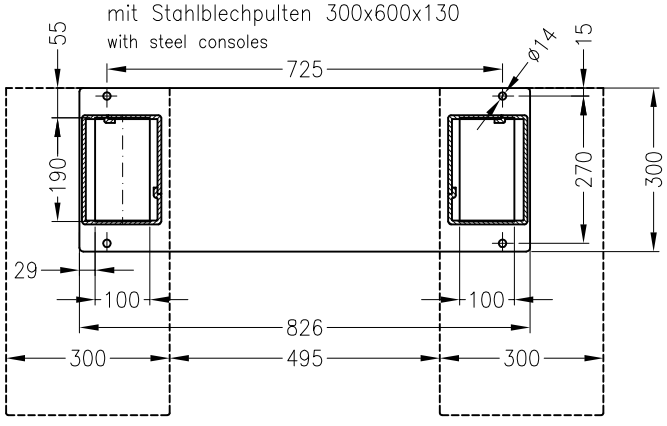

Iso-Pulte: grau
lackierte Konsole Standard: RAL 7032 grau
Iso-console units: grey
coated console standard: RAL 7032 grey

Stahlblech Pultaufsätze auf Anfrage
steel consoles on request

Gewicht ~80-100 kg
weight ~80-100 kg

Spohn + Burkhardt
Elektrotechnische Fabrik Blaubeuren

Mauergasse 5
89143 BLAUBEUREN
GERMANY

Tel. +49 7344 171-0 info@spobu.de
Fax +49 7344 171-99 www.spobu.de

Steuerstand drehbar FSADH mit Heizung und 2 Längsverstellmöglichkeiten

Rotating operator console FSADH with adjustable chair, consoles and heating

List 7 / 2014
M 22/5A-1

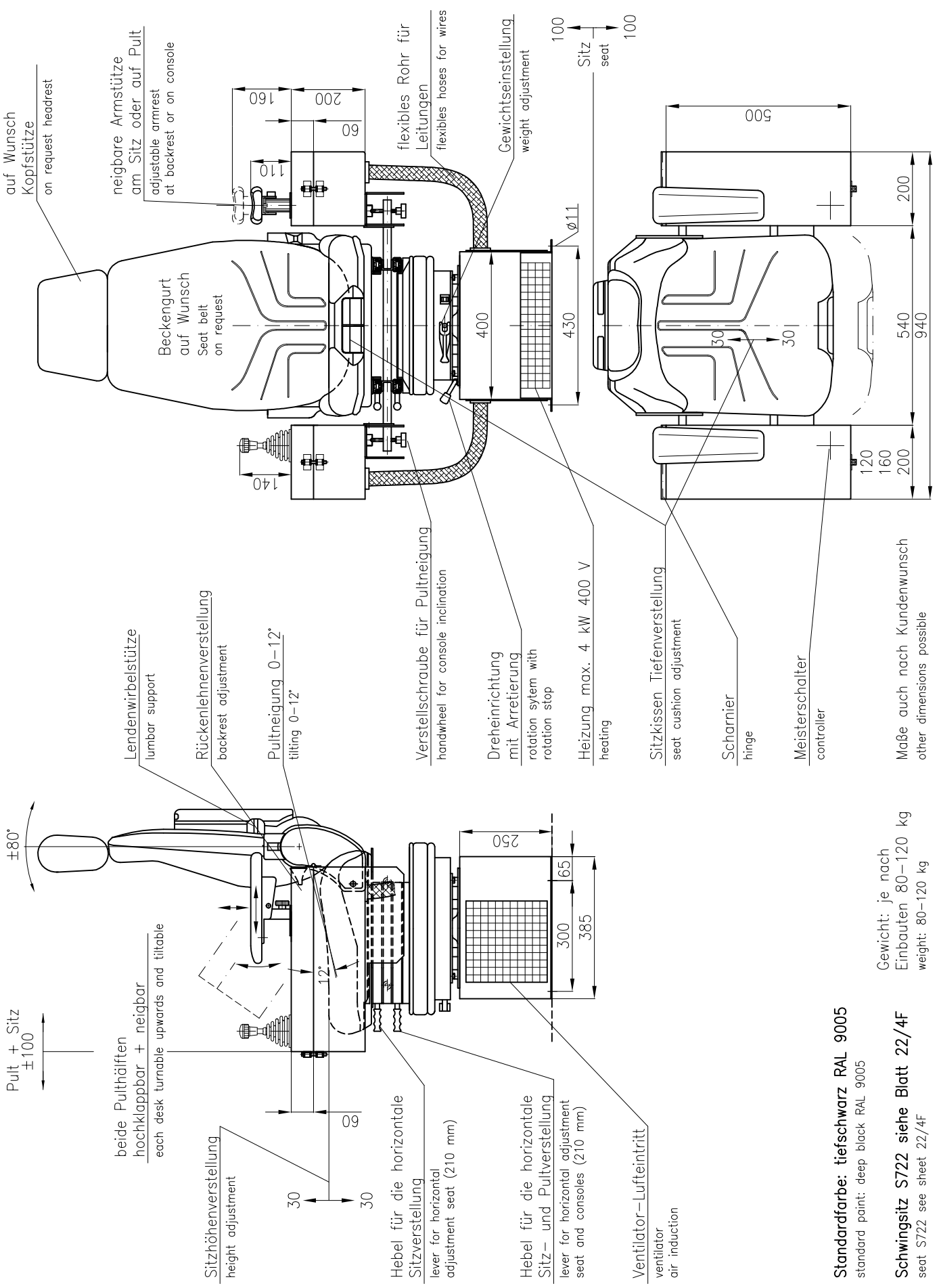

Spohn+Burkhardt
Elektrotechnische Fabrik Blaubeuren

Mauergasse 5
89143 BLAUBEUREN
GERMANY

Tel. +49 7344 171-0
Fax +49 7344 171-99

info@spobu.de
www.spobu.de

Steuerstand FSA nicht drehbar mit 2 Längsverstellmöglichkeiten

Operator console FSA non-rotatable with adjustable chair and consoles

List 7 / 2014
M 22/5A

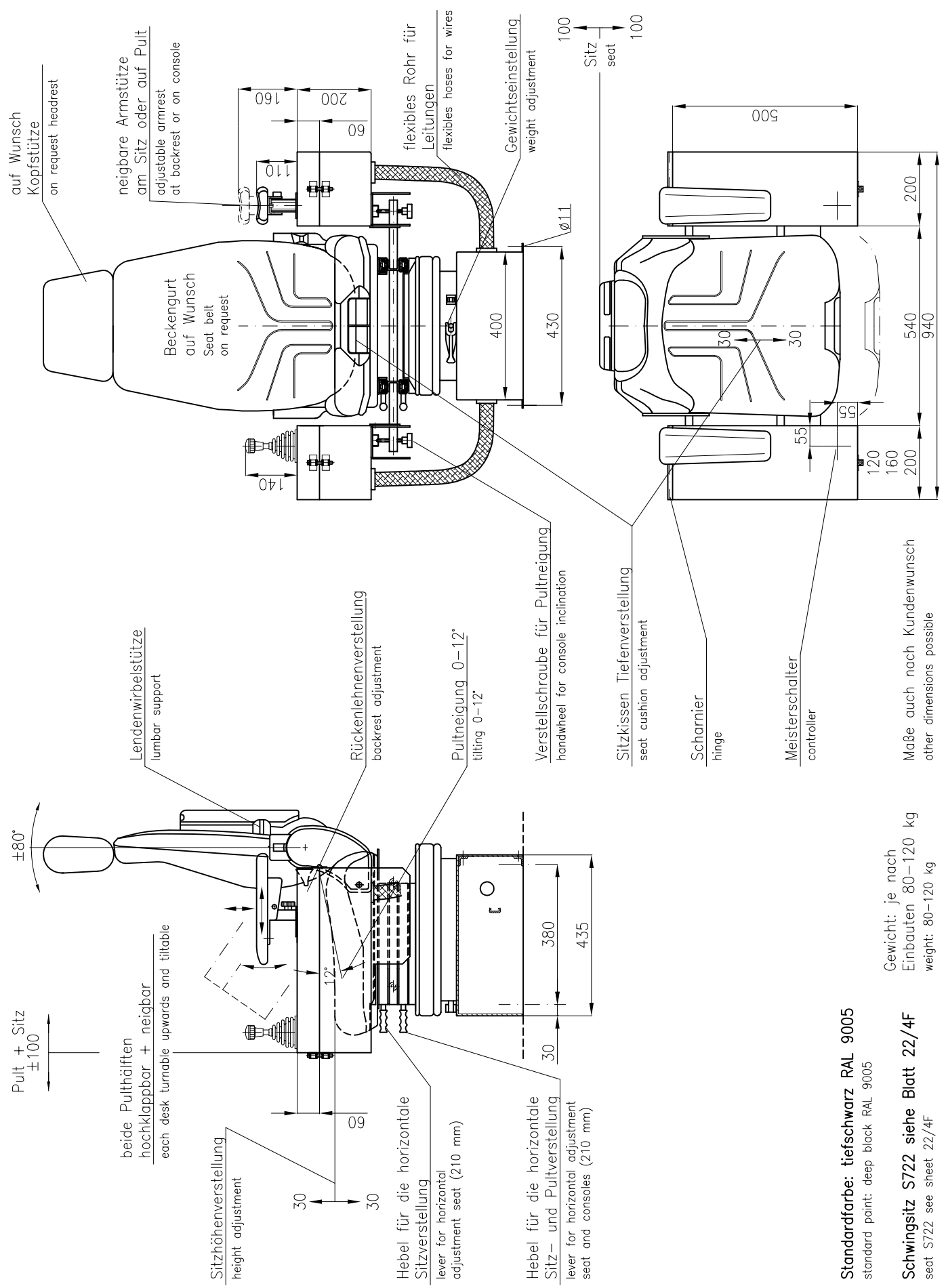

Spohn+Burkhardt
Elektrotechnische Fabrik Blaubeuren

Mauergasse 5
89143 BLAUBEUREN
GERMANY

Tel. +49 7344 171-0 info@spobu.de
Fax +49 7344 171-99 www.spobu.de

Steuerstand FSAD drehbar
mit Y Sitzkissen und 2 Längsverstellmöglichkeiten
Operator console rotatable FSAD with adjustable Y-cut chair and consoles

List 7 / 2014
M 22/5B-1

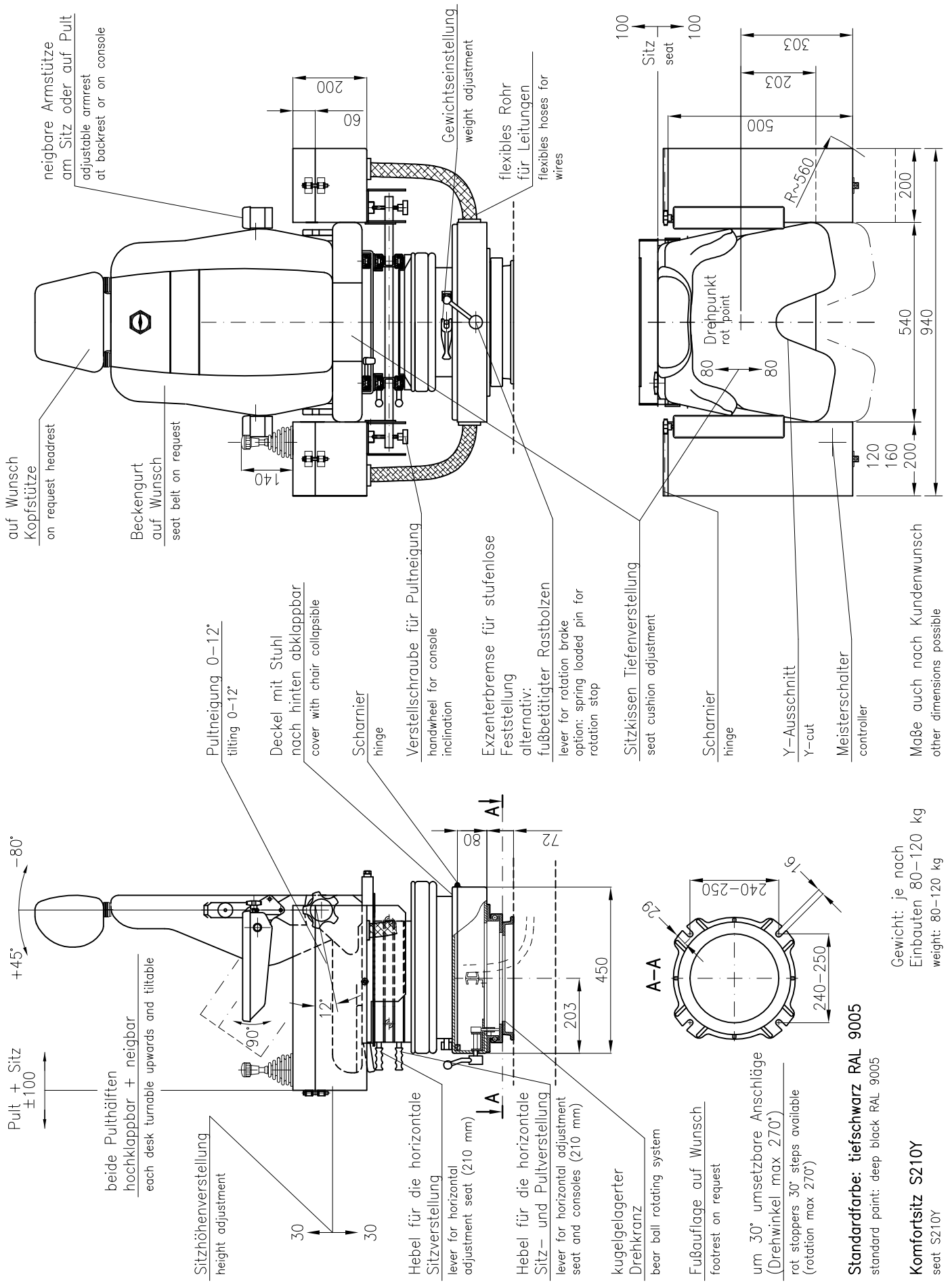

Spohn+Burkhardt
Elektrotechnische Fabrik Blaubeuren

Mauergasse 5
89143 BLAUBEUREN
GERMANY

Tel. +49 7344 171-0
Fax +49 7344 171-99

info@spobu.de
www.spobu.de

Spohn+Burkhardt
Elektrotechnische Fabrik Blaubeuren
Mauergasse 5
89143 BLAUBEUREN
GERMANY
Tel. +49 7344 171-0
Fax +49 7344 171-99
info@spobu.de
www.spobu.de

Steuerstand FSAD drehbar, mit 2 Längsverstellmöglichkeiten

Operator console rotatable FSAD with adjustable chair and consoles

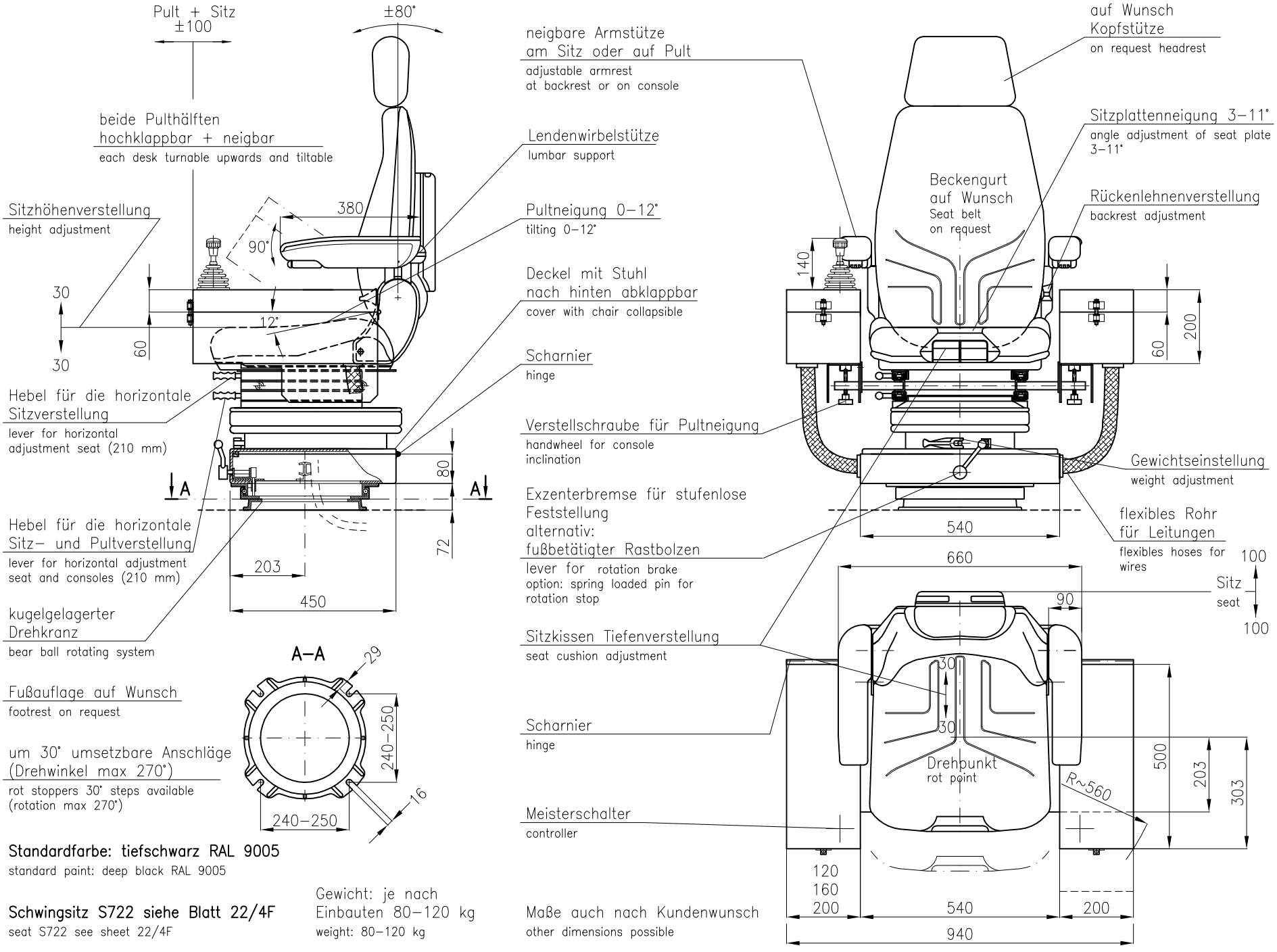

Standardfarbe: tiefschwarz RAL 9005
standard paint: deep black RAL 9005

Schwingsitz S722 siehe Blatt 22/4F
seat S722 see sheet 22/4F

Gewicht: je nach Einbauten 80–120 kg
weight: 80–120 kg

Steuerstand FSK nicht drehbar
Operator console FSK non-rotatable

List 7 / 2014
M 22/5i

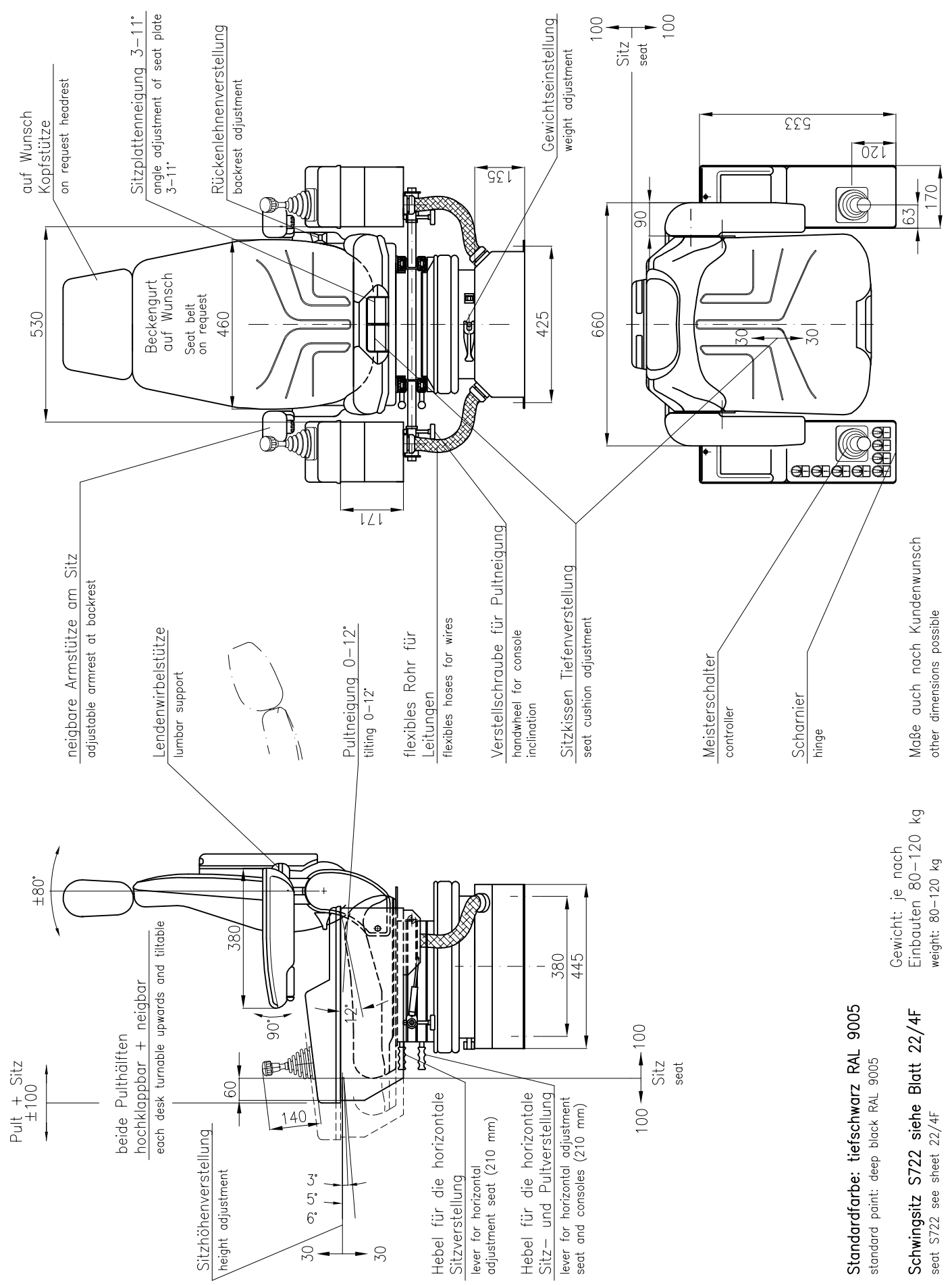

Standardfarbe: tiefschwarz RAL 9005
standard paint: deep black RAL 9005

Schwingsitz S722 siehe Blatt 22/4F
seat S722 see sheet 22/4F

Spohn+Burkhardt
Elektrotechnische Fabrik Blaubeuren

Mauergasse 5
89143 BLAUBEUREN
GERMANY

Tel. +49 7344 171-0 info@spobu.de
Fax +49 7344 171-99 www.spobu.de

Spohn+Burkhardt
Elektrotechnische Fabrik Blaubeuren
Mauergasse 5
89143 BLAUBEUREN
GERMANY
Tel. +49 7344 171-0 info@spobu.de
Fax +49 7344 171-99 www.spobu.de

Steuerstand drehbar FSKD

Operator console rotatable FSKD

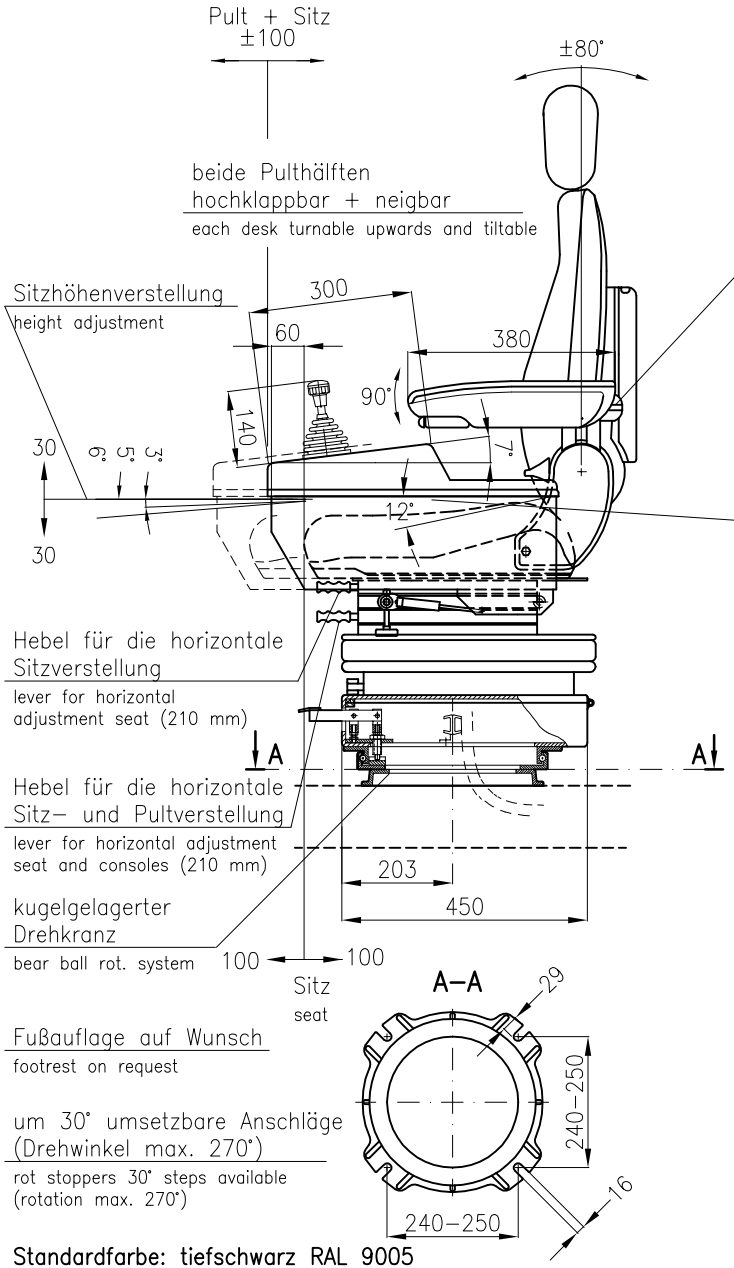

Standardfarbe: tiefschwarz RAL 9005
standard paint: black

Schwingsitz S722 siehe Blatt 22/4F
seat S722 see sheet 22/4F

Gewicht: je nach
Einbauten 80–120 kg
weight: 80–120 kg

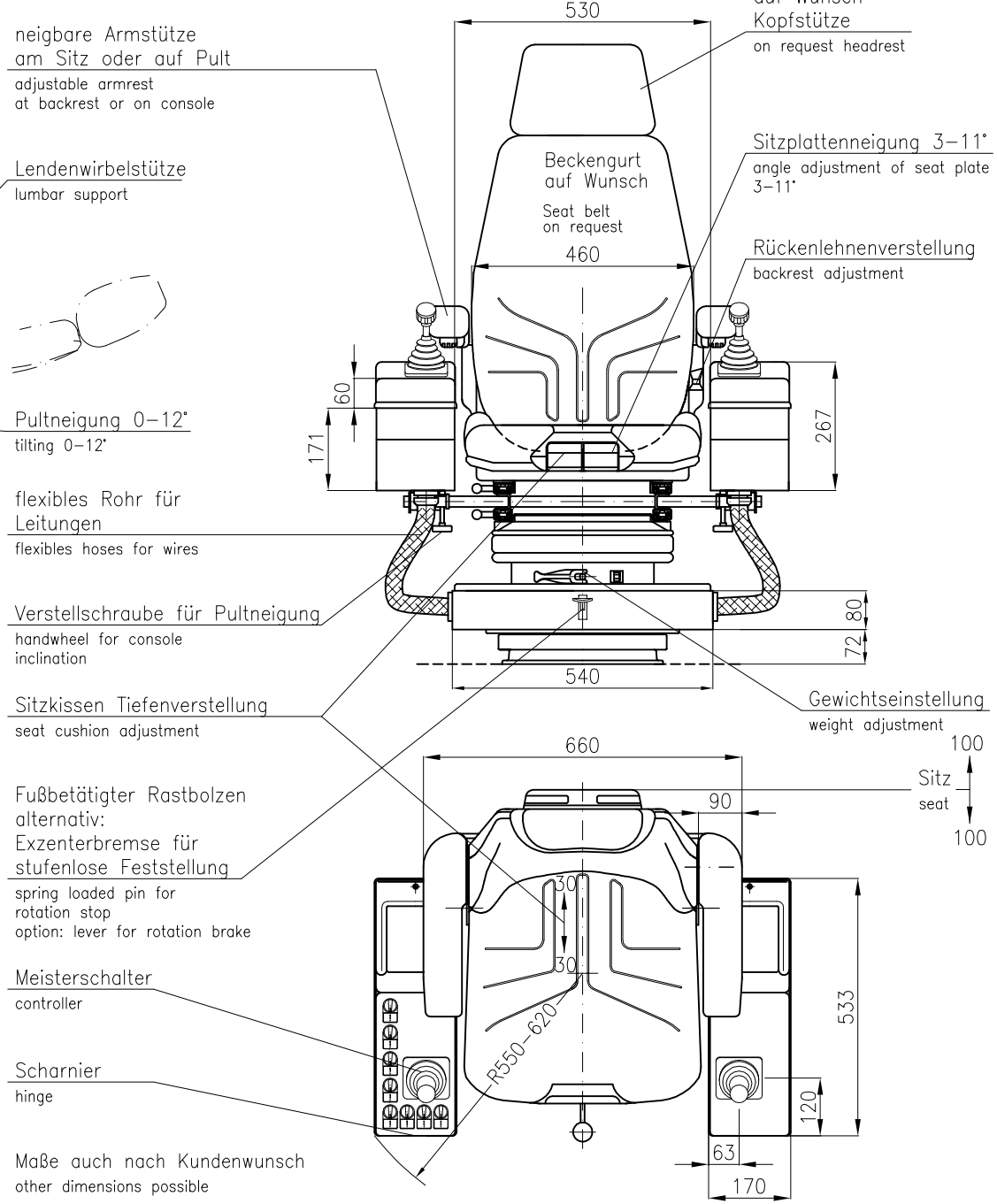

Spohn+Burkhardt
Elektrotechnische Fabrik Blaubeuren
Mauergasse 5
89143 BLAUBEUREN
GERMANY
Tel. +49 7344 171-0
Fax +49 7344 171-99
info@spobu.de
www.spobu.de

Steuerstand FSRHD

Operator console FSRHD

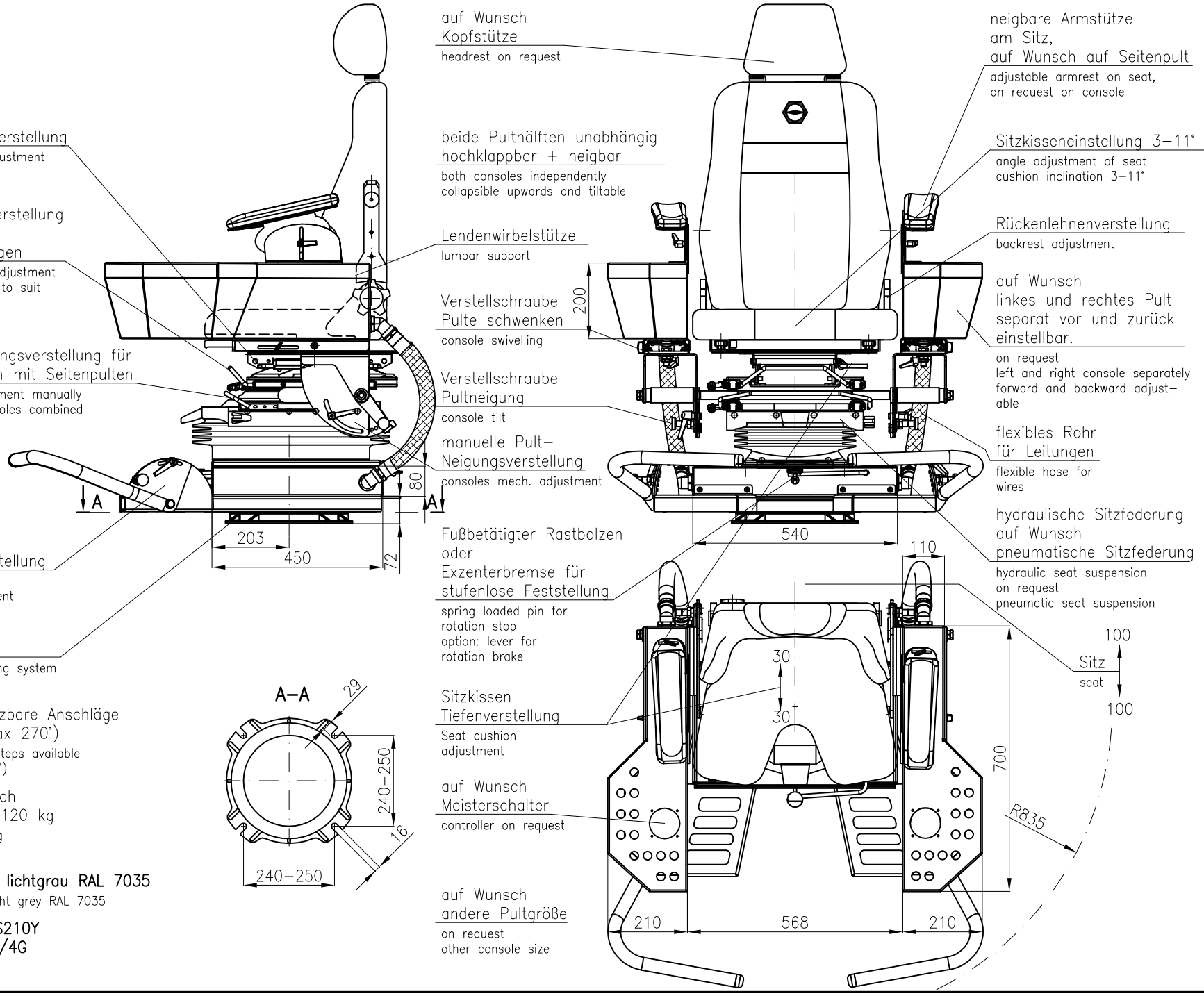

Steuerstand FSRHD-G
Operator console FSRHD-G

List 7 / 2014
M 22/5R-2

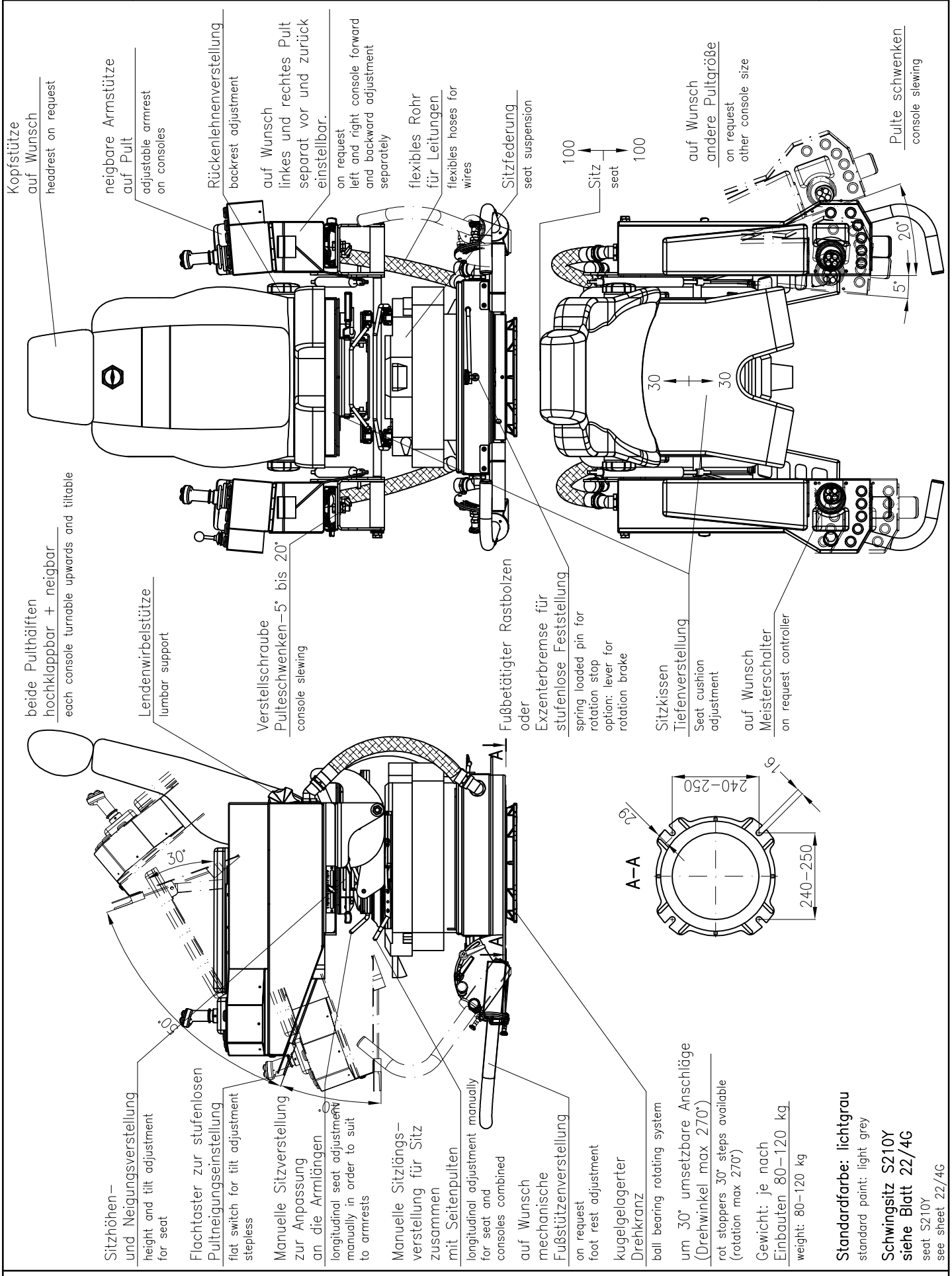

Spohn+Burkhardt
Elektrotechnische Fabrik Blaubeuren

Mauergasse 5
89143 BLAUBEUREN
GERMANY

Tel. +49 7344 171-0 info@spobu.de
Fax +49 7344 171-99 www.spobu.de

Steuerstand FSRHD-2G
Operator console FSRHD-2G

List 7 / 2014
M 22/5R-3A

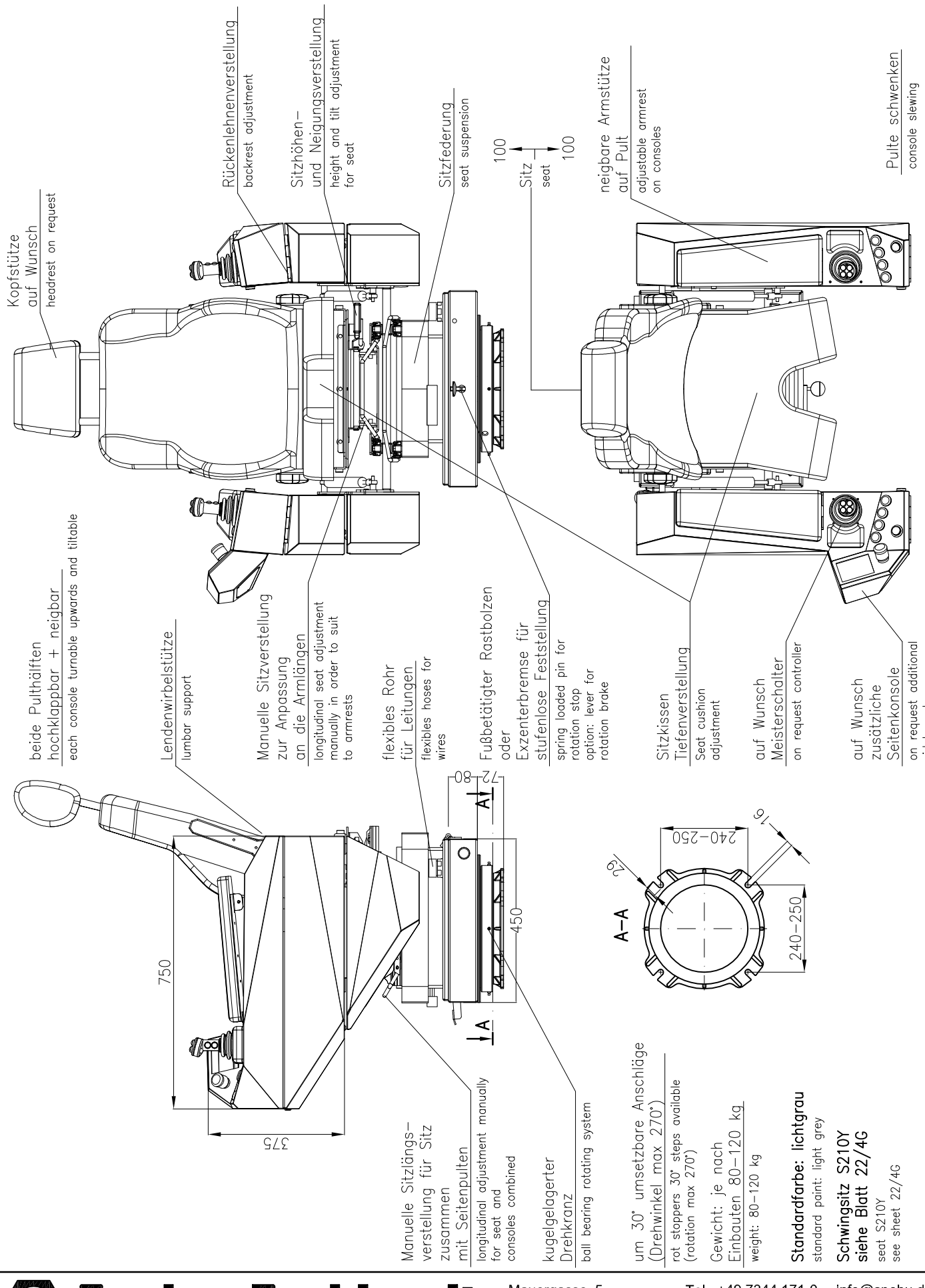

Spohn+Burkhardt
Elektrotechnische Fabrik Blaubeuren

Mauergasse 5
89143 BLAUBEUREN
GERMANY

Tel. +49 7344 171-0
Fax +49 7344 171-99

info@spobu.de
www.spobu.de

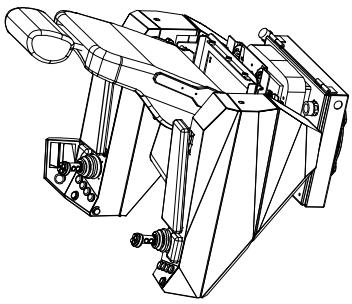

Mech. Rückenlehnenverstellung
mech. backrest adjustment

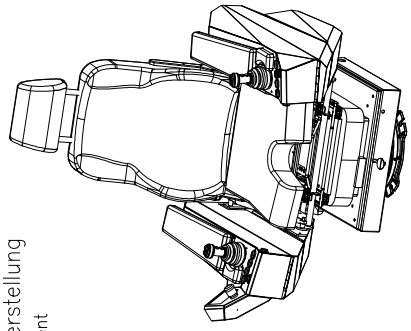

Mech. Kopfstützenverstellung
mech. headrest adjustment

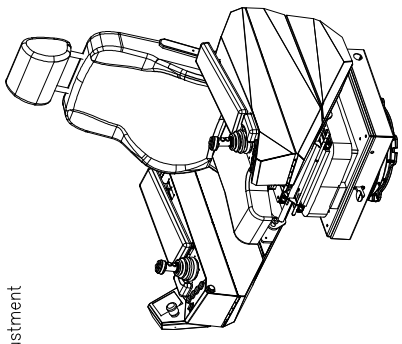

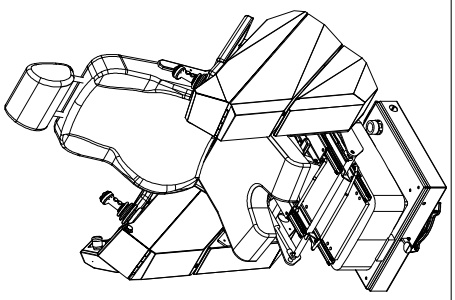

beide Pulthälften
hochklappbar + neigbar
each console turnable upwards and tiltable

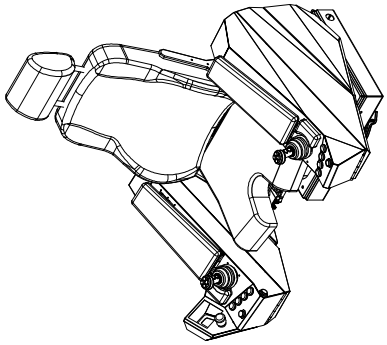

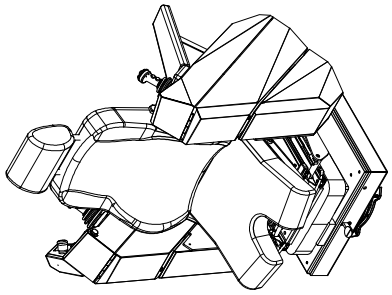

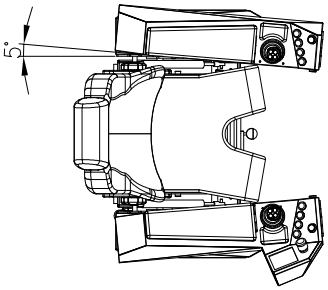

Pulte manuell schwenkbar
consoles rotatable manually

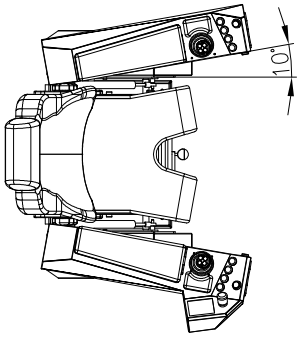

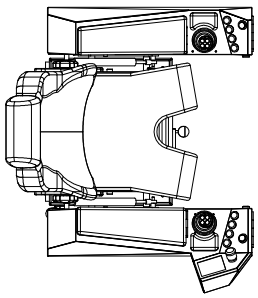

Spohn+Burkhardt
Elektrotechnische Fabrik Blaubeuren

Mauergasse 5
89143 BLAUBEUREN
GERMANY

Tel. +49 7344 171-0 info@spobu.de
Fax +49 7344 171-99 www.spobu.de

Steuerstand FSR, nicht drehbar
Operator console FSR, non-rotatable

List 7 / 2014
M 22/5RA

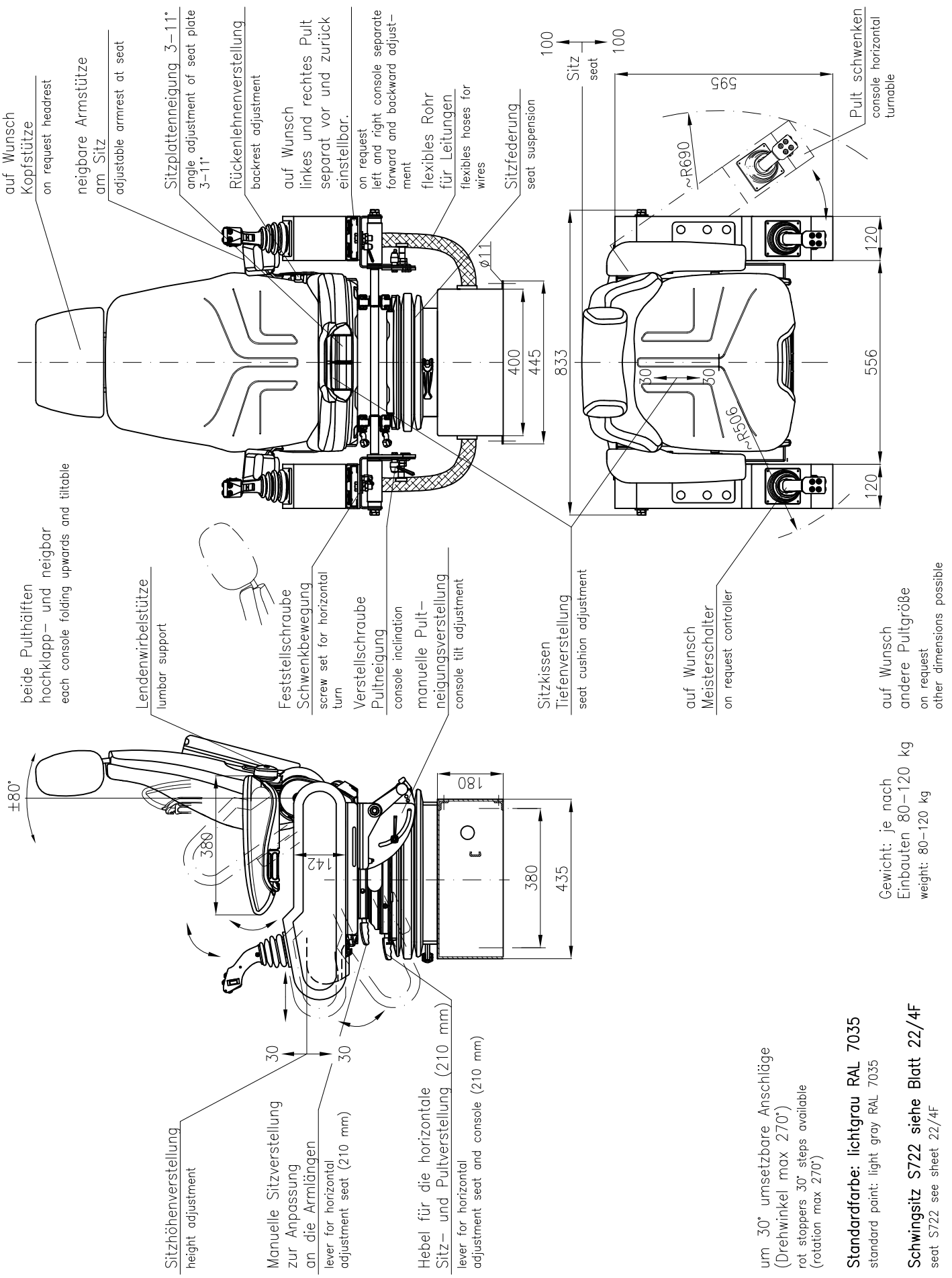

Spohn+Burkhardt
Elektrotechnische Fabrik Blaubeuren

Mauergasse 5
89143 BLAUBEUREN
GERMANY

Tel. +49 7344 171-0
Fax +49 7344 171-99

info@spobu.de
www.spobu.de

Spohn+Burkhardt
Elektrotechnische Fabrik Blaubeuren
Mauergasse 5
89143 BLAUBEUREN
GERMANY
Tel. +49 7344 171-0
Fax +49 7344 171-99
info@spobu.de
www.spobu.de

Steuerstand FSRD, drehbar

Operator consoles FSRD, rotatable

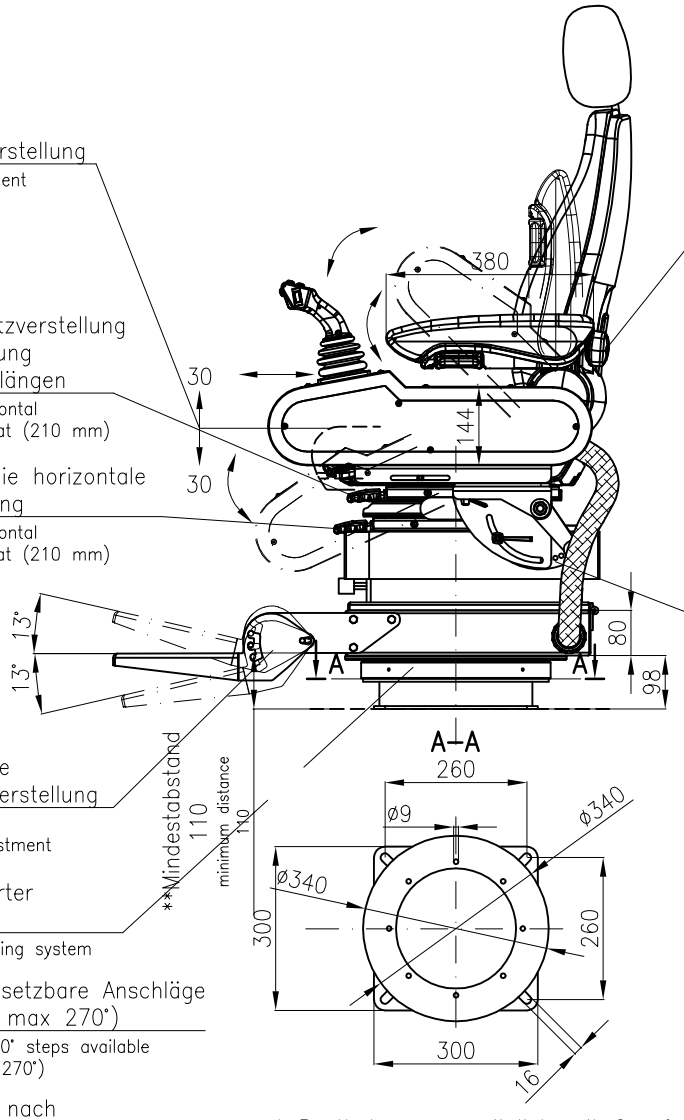

Sitzhöhenverstellung
height adjustment

Manuelle Sitzverstellung zur Anpassung an die Armlängen
lever for horizontal adjustment seat (210 mm)

Hebel für die horizontale Sitzverstellung
lever for horizontal adjustment seat (210 mm)

auf Wunsch mechanische Fußstützenverstellung
on request foot rest adjustment

kugelgelagerter Drehkranz
bear ball rotating system

um 30° umsetzbare Anschläge (Drehwinkel max 270°)
rot stoppers 30° steps available (rotation max 270°)

Gewicht: je nach Einbauten 80–120 kg
weight: 80–120 kg

Standardfarbe: lichtgrau RAL 7035
standard paint: light grey RAL 7035

Schwingsitz S722
siehe Blatt 22/4F
seat S722
see sheet 22/4F

Lendenwirbelstütze
lumbar support

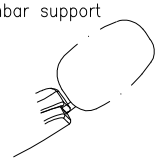

Verstellschraube Pulteschwenken
console slewing

Verstellschraube Pultneigung
console inclination

manuelle Pult–Neigungsverstellung
consoles mech. adjustment

* Fußbetätigter Rastbolzen Exzenterbremse für stufenlose Feststellung
rotation brake spring loaded pin for rotation stop

Sitzkissen Tiefenverstellung
Seat cushion adjustment

auf Wunsch Meisterschalter
on request controller

auf Wunsch andere Pultgröße
on request other console size

* Rastbolzen nur möglich mit Gussfuß + zusätzlichem Abstandhalter zum Boden
Spring loaded pin only available with cast mounting foot + additional distance holder to bottom

**Mindestabstand zum Boden beachten! Nicht verwendbar mit SV0C11UG ausser mit zusätzlichem Fuß
Take note of minimum distance to bottom Not applicable with SV0C11UG except with additional spacer

beide Pulthälften hochklappbar + neigbar
each console turnable upwards and tiltable

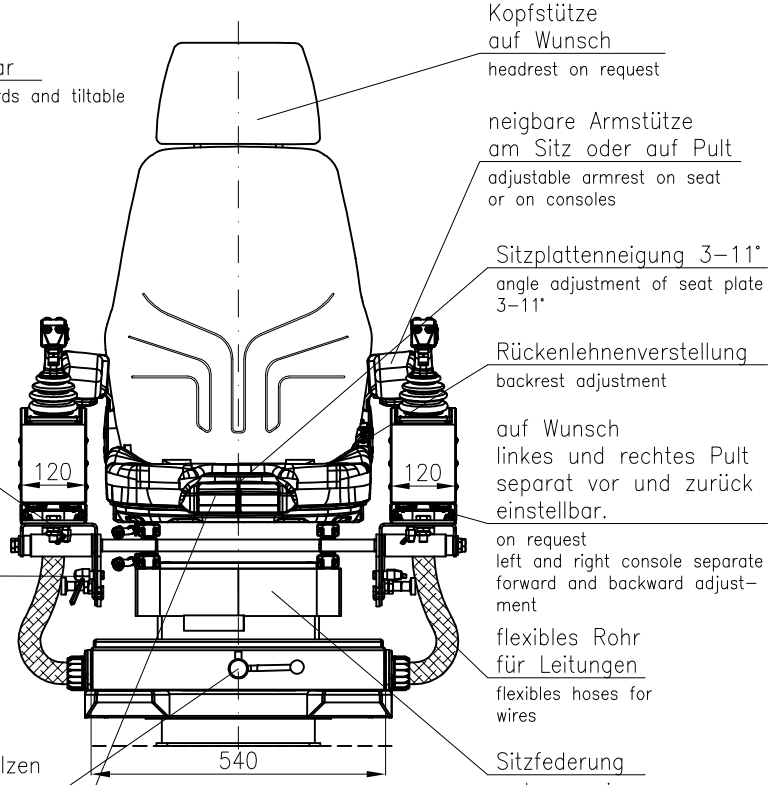

Kopfstütze auf Wunsch
headrest on request

neigbare Armstütze am Sitz oder auf Pult
adjustable armrest on seat or on consoles

Sitzplattenneigung 3–11°
angle adjustment of seat plate 3–11°

Rückenlehnenverstellung
backrest adjustment

auf Wunsch linkes und rechtes Pult separat vor und zurück einstellbar.
on request left and right console separate forward and backward adjustment

flexibles Rohr für Leitungen
flexibles hoses for wires

Sitzfederung
seat suspension

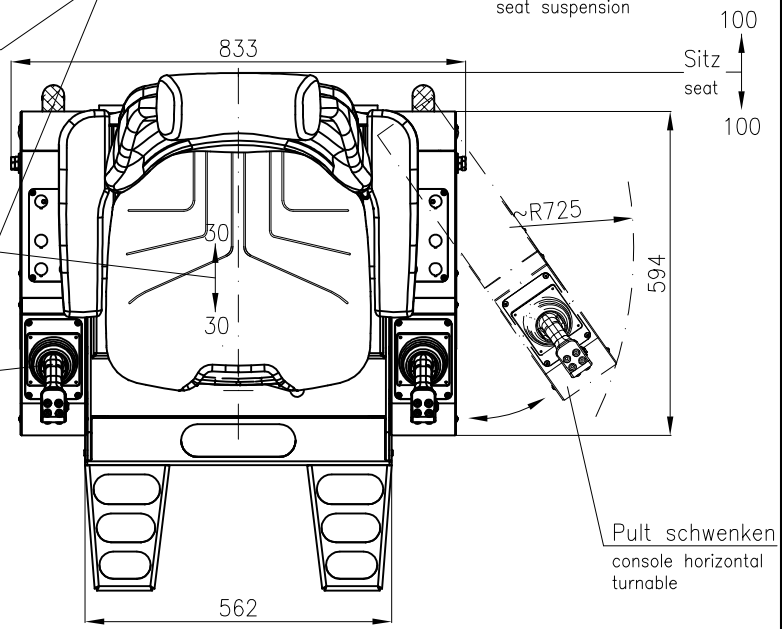

Pult schwenken
console horizontal turnable

Steuerstand drehbar FSMD
Sitz und Pulte gemeinsam motorisch verstellbar
Operator console rotatable, seat and consoles motorized combined adjustable

List 7 / 2013
M 22/6

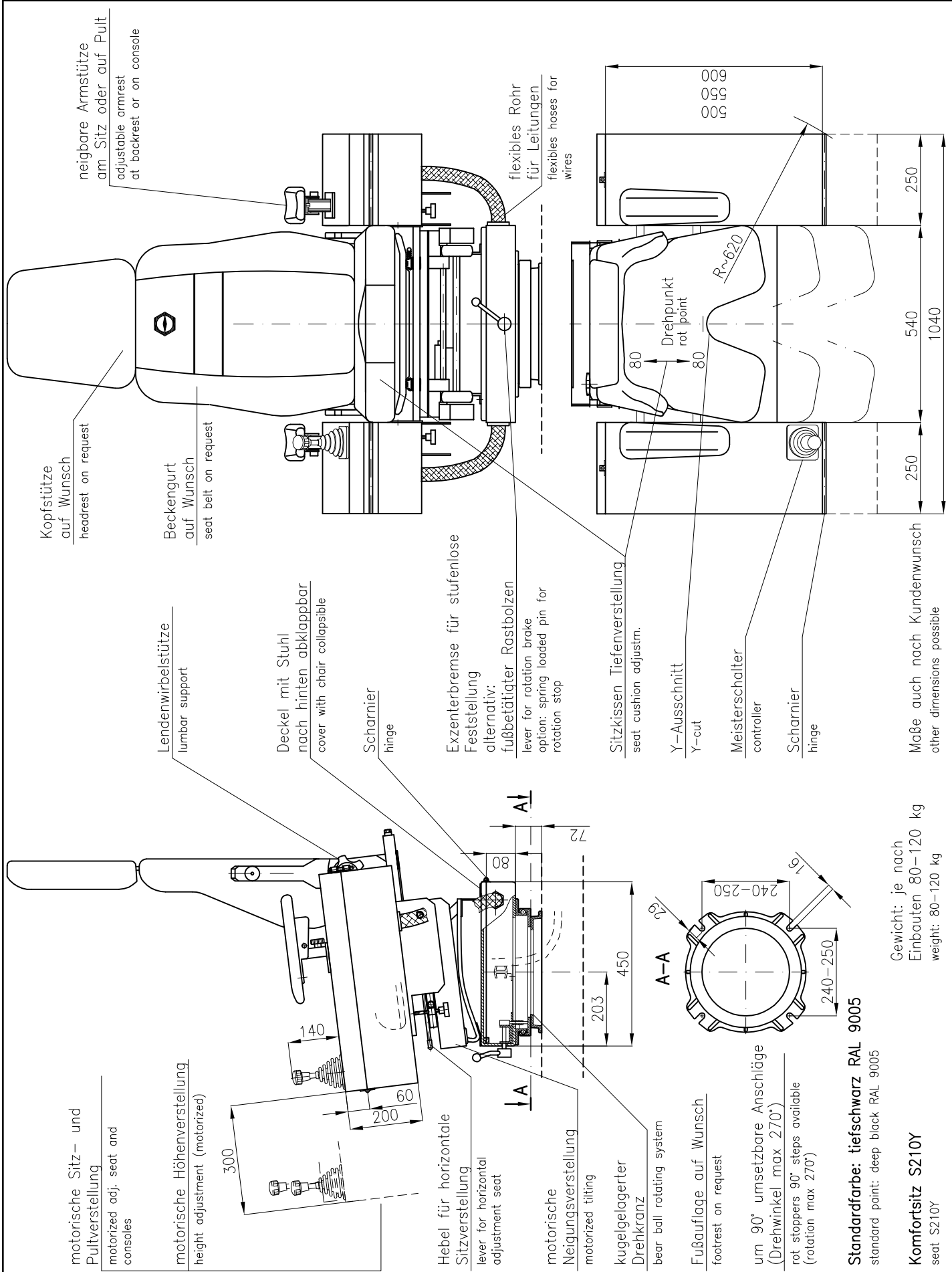

Spohn+Burkhardt
MAUERGASSE 5 • 89143 BLAUBEUREN GERMANY
Fon +49 7344 171-0
Fax +49 7344 171-99
info@spobu.de
www.spobu.de

List 7 / 2014 M 22/6A	Steuerstand drehbar FSMDF Sitz und Pulte gemeinsam motorisch verstellbar, mit Sitzfederung und Fußauflage Rotating unit, seat and consoles motorized combined adjustable, with suspension and footrest	List 7 / 2014 M 22/6A

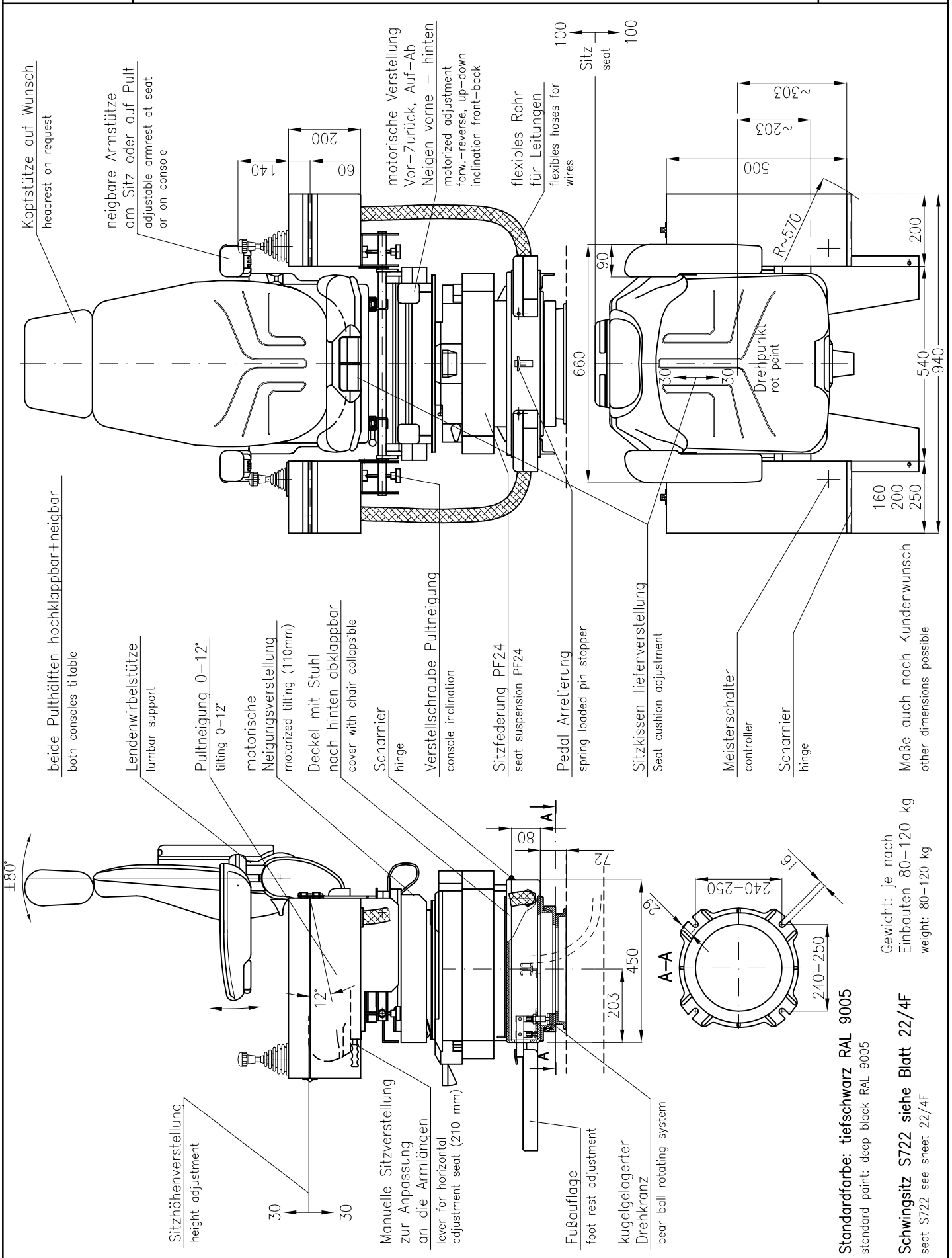

Spohn+Burkhardt
Elektrotechnische Fabrik Blaubeuren
Mauergasse 5
89143 BLAUBEUREN
GERMANY
Tel. +49 7344 171-0
Fax +49 7344 171-99
info@spobu.de
www.spobu.de

Steuerstand drehbar SV1C

Operator console rotatable SV1C, unit with adjustable chair

List 7 / 2014
M 22/7A

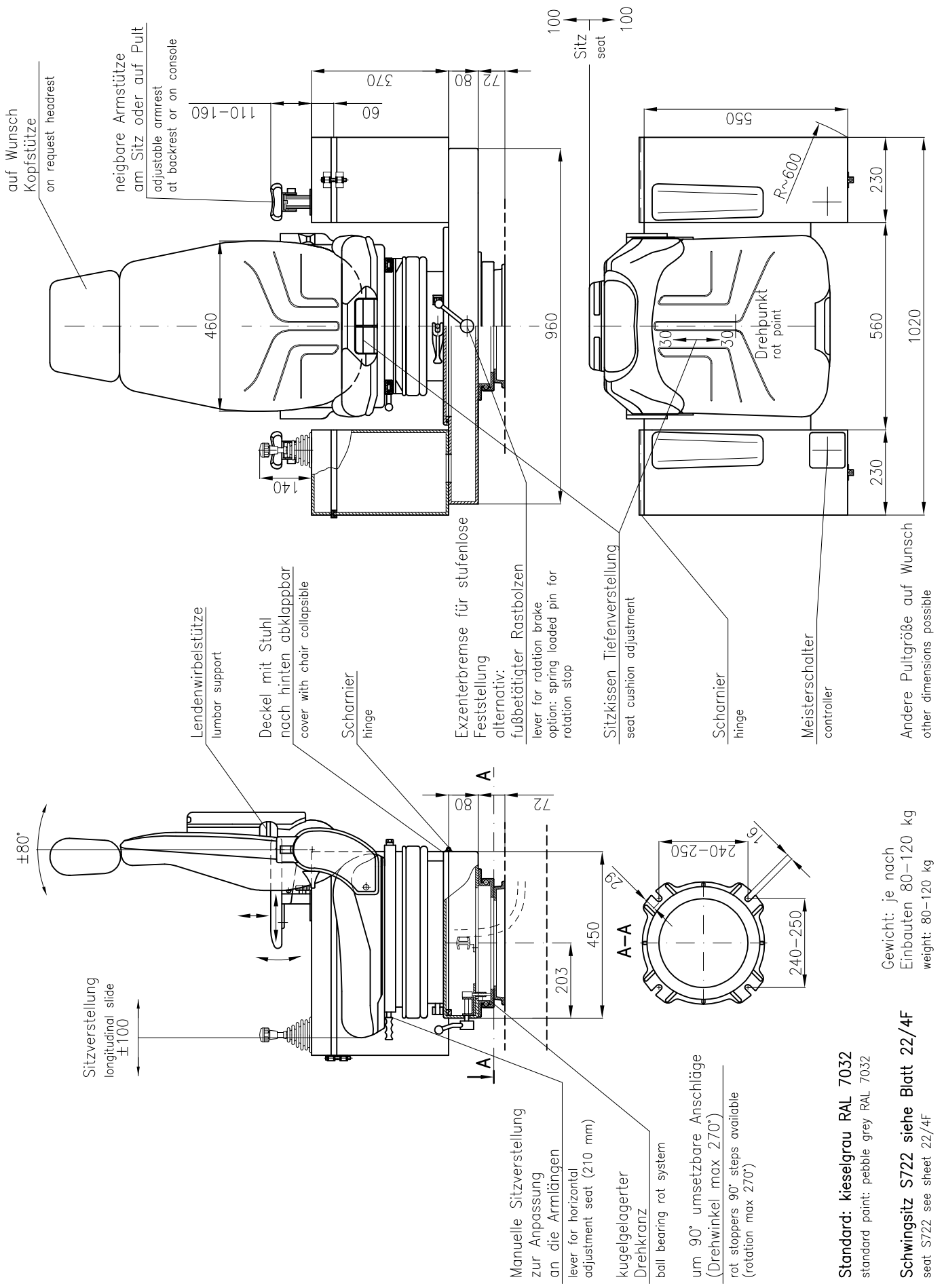

Spohn+Burkhardt
Elektrotechnische Fabrik Blaubeuren

Mauergasse 5
89143 BLAUBEUREN
GERMANY

Tel. +49 7344 171-0 info@spobu.de
Fax +49 7344 171-99 www.spobu.de

Spohn+Burkhardt
Elektrotechnische Fabrik Blaubeuren
Mauergasse 5
89143 BLAUBEUREN
GERMANY
Tel. +49 7344 171-0
Fax +49 7344 171-99
info@spobu.de
www.spobu.de

Steuerstand drehbar SV1CF mit Fußauflage

Operator console rotatable SV1CF, unit with adjustable chair and footrest

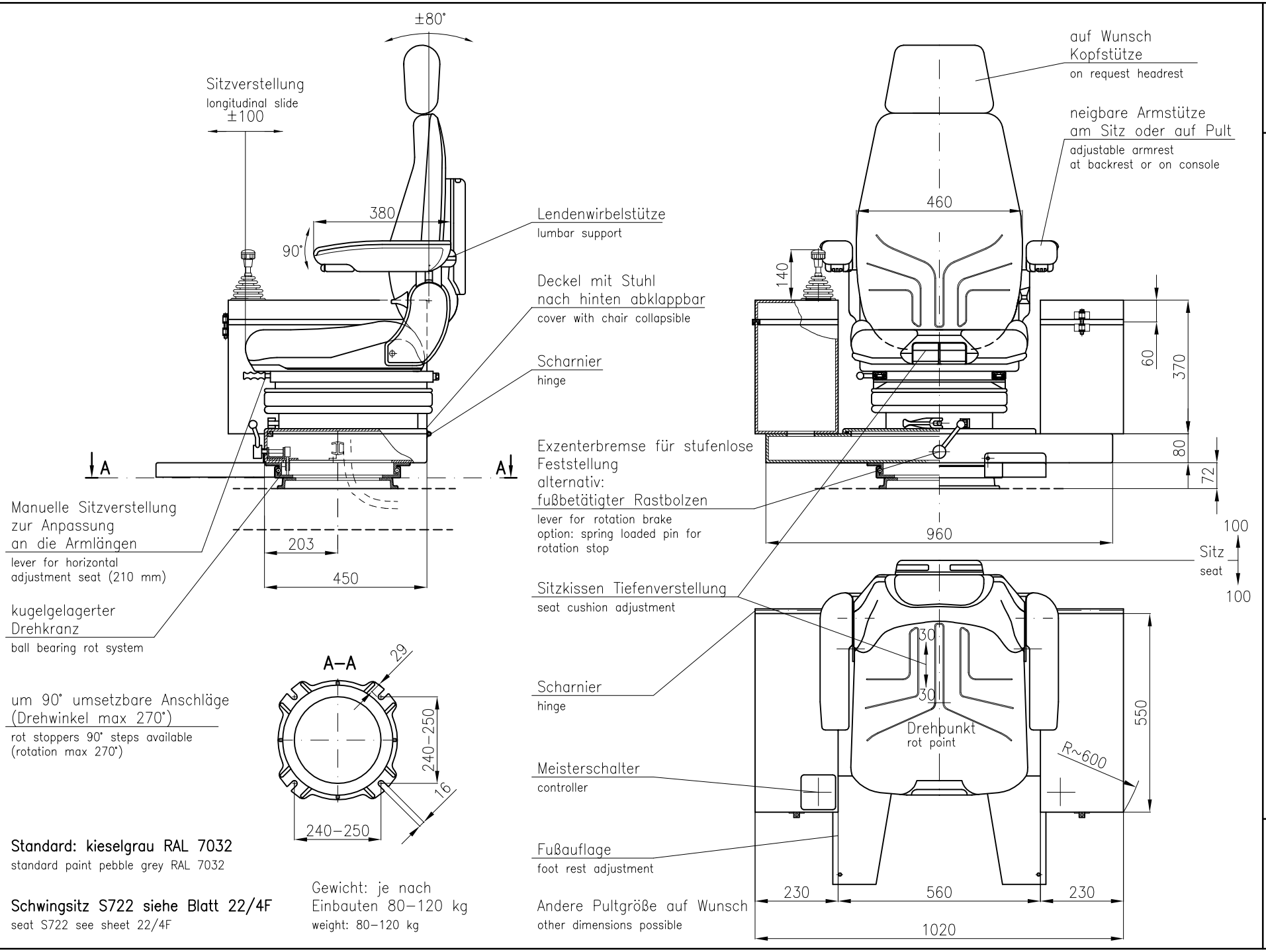

List 7 / 2014
M 22/7AF

Steuerstand drehbar SV1CJ

Operator console rotatable SV1CJ, unit with adjustable chair

List 7 / 2014
M 22/7B

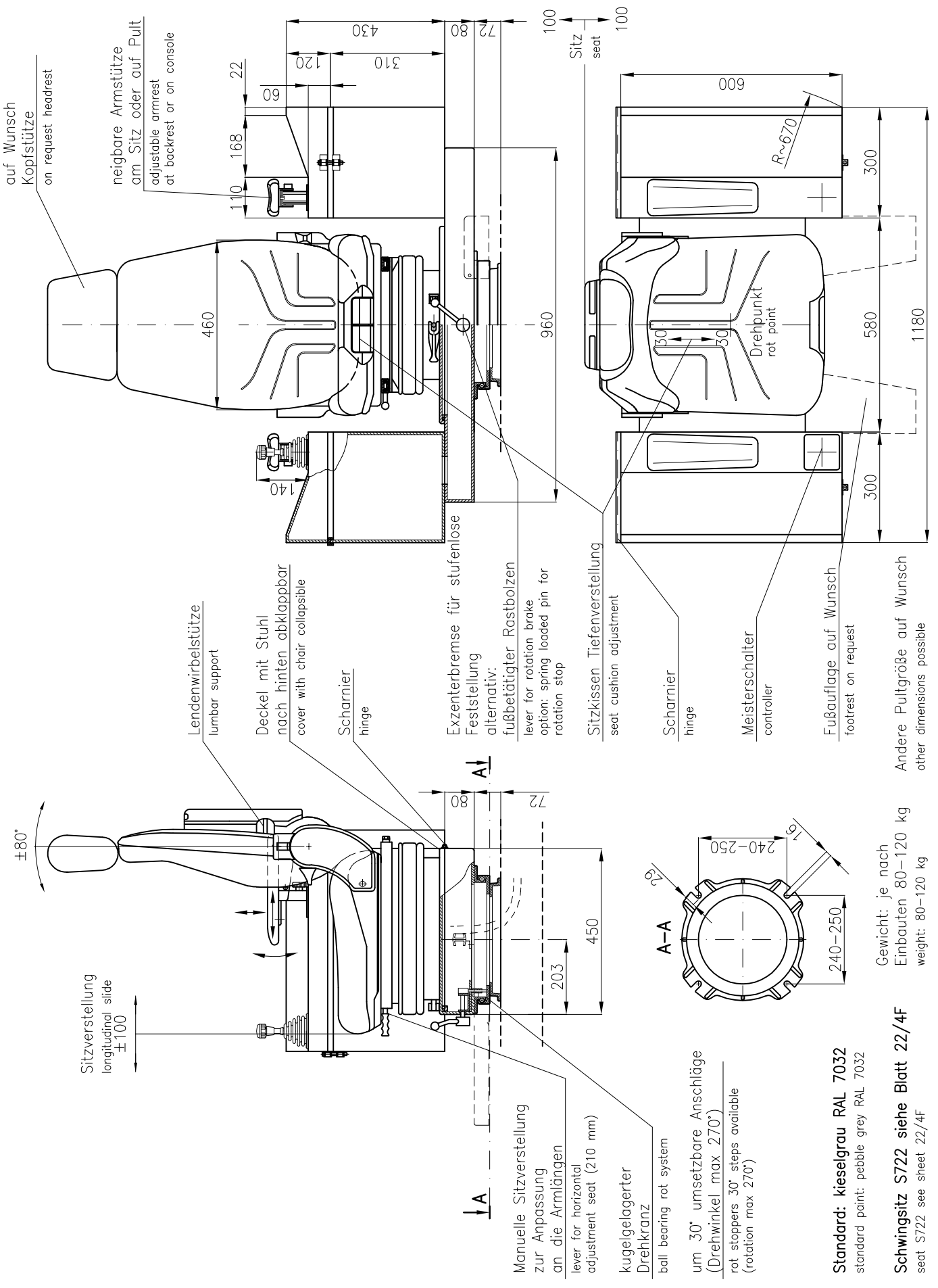

Spohn+Burkhardt
Elektrotechnische Fabrik Blaubeuren

Mauergasse 5
89143 BLAUBEUREN
GERMANY

Tel. +49 7344 171-0 info@spobu.de
Fax +49 7344 171-99 www.spobu.de

Klappsitz KS– Raumsparend durch seitliches Abklappen von Sitz und Rückenlehne

Collapsible chair KS– compact with side folding for operator access

List 7 / 2014
M 22/8A

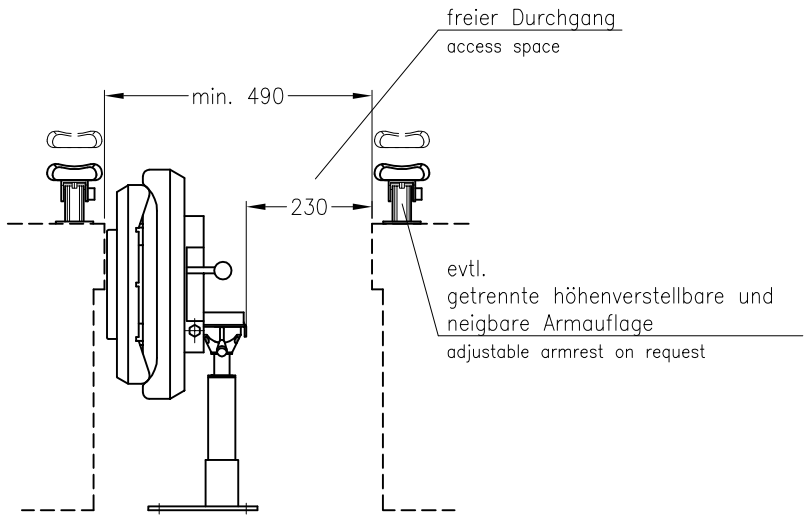

Typ Type	Ausführung Description
KSGF	mit verschleissfester Polsterung aus Integralschaum Sitzfläche zusätzlich mit Filzeinlage with hard wearing vinyl upholstering, seat with felt insert gefedert with suspension
KSPGF	Sitzpolster mit auswechselbarem Sitzbezug removable cotton cover gefedert with suspension

Gewicht ~23 kg
weight ~23 kg

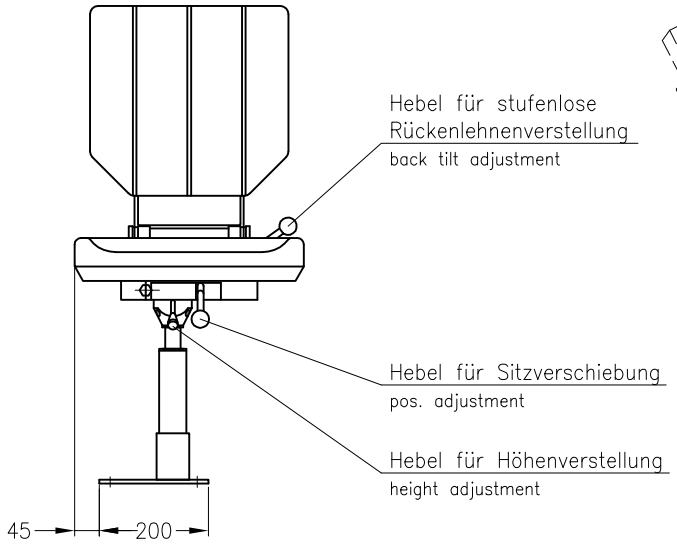

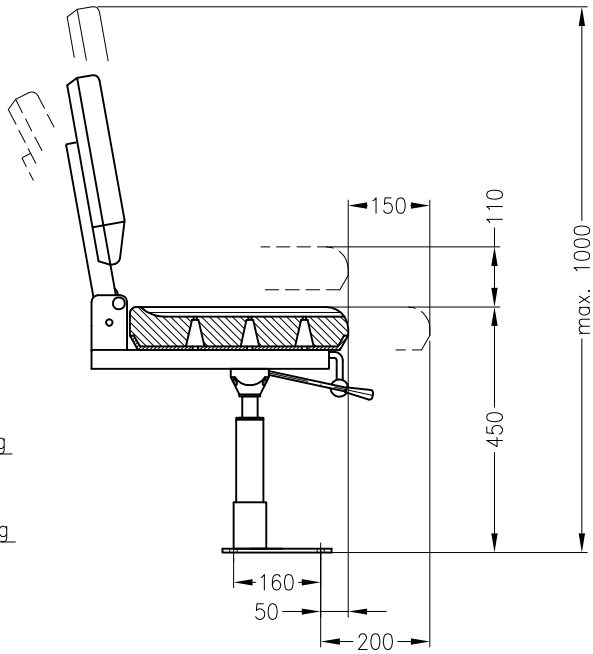

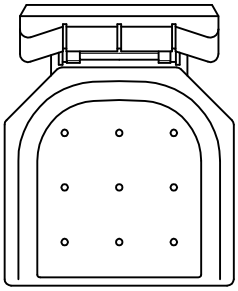

Befestigungsbohrungen
fixing holes

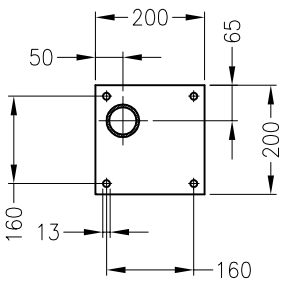

Spohn + Burkhardt
Elektrotechnische Fabrik Blaubeuren

Mauergasse 5
89143 BLAUBEUREN
GERMANY

Tel. +49 7344 171-0 info@spobu.de
Fax +49 7344 171-99 www.spobu.de

Klappsitz KSHC– Raumsparend durch seitliches Abklappen von Sitz und Rückenlehne

Collapsible chair KSHC– compact with side folding for operator access

List 7 / 2014
M 22/8B

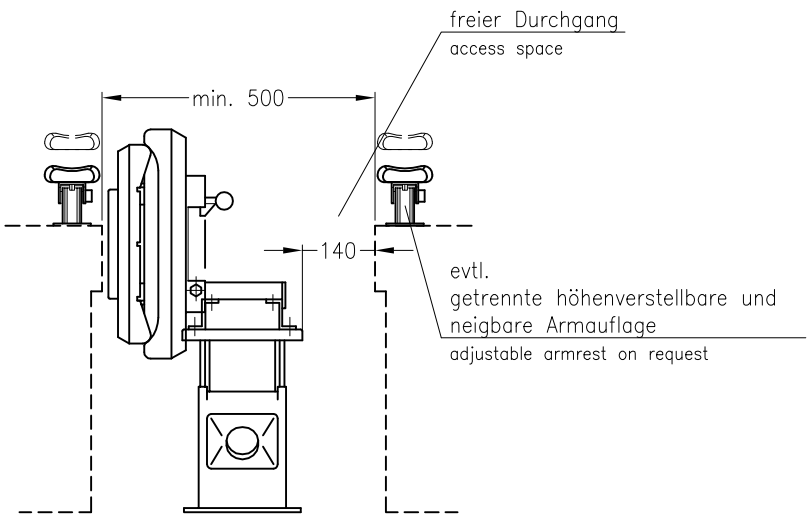

Typ Type	Ausführung Version
KSHC	mit verschleissfester Polsterung aus Integralschaum Sitzfläche zusätzlich mit Filzeinlage with hard wearing vinyl upholstering, seat with felt insert
KSHCP	Sitzpolster mit auswechselbarem Sitzbezug removable cotton cover

Gewicht ~23 kg
weight ~23 kg

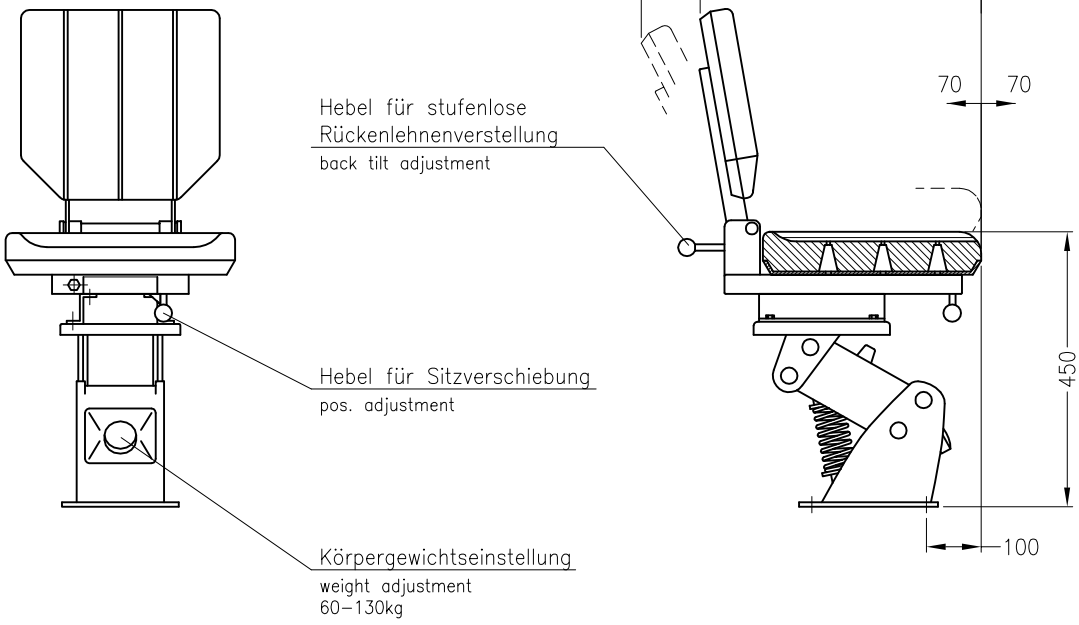

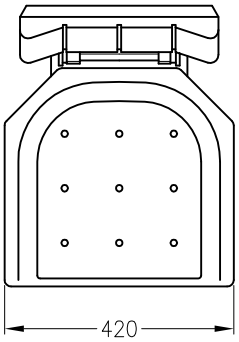

Befestigungsbohrungen
fixing holes

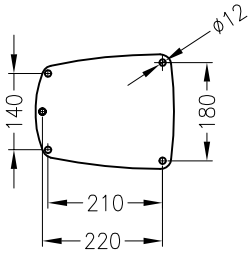

Spohn+Burkhardt
Elektrotechnische Fabrik Blaubeuren

Mauergasse 5
89143 BLAUBEUREN
GERMANY

Tel. +49 7344 171-0 info@spobu.de
Fax +49 7344 171-99 www.spobu.de

Steuerstand FSMMD–SHN
mit motorischer Höhen– und Neigungsverstellung
Rotating operator console with motorized tilt and inclination adjustment

List 7 / 2014
M 22/9-1A

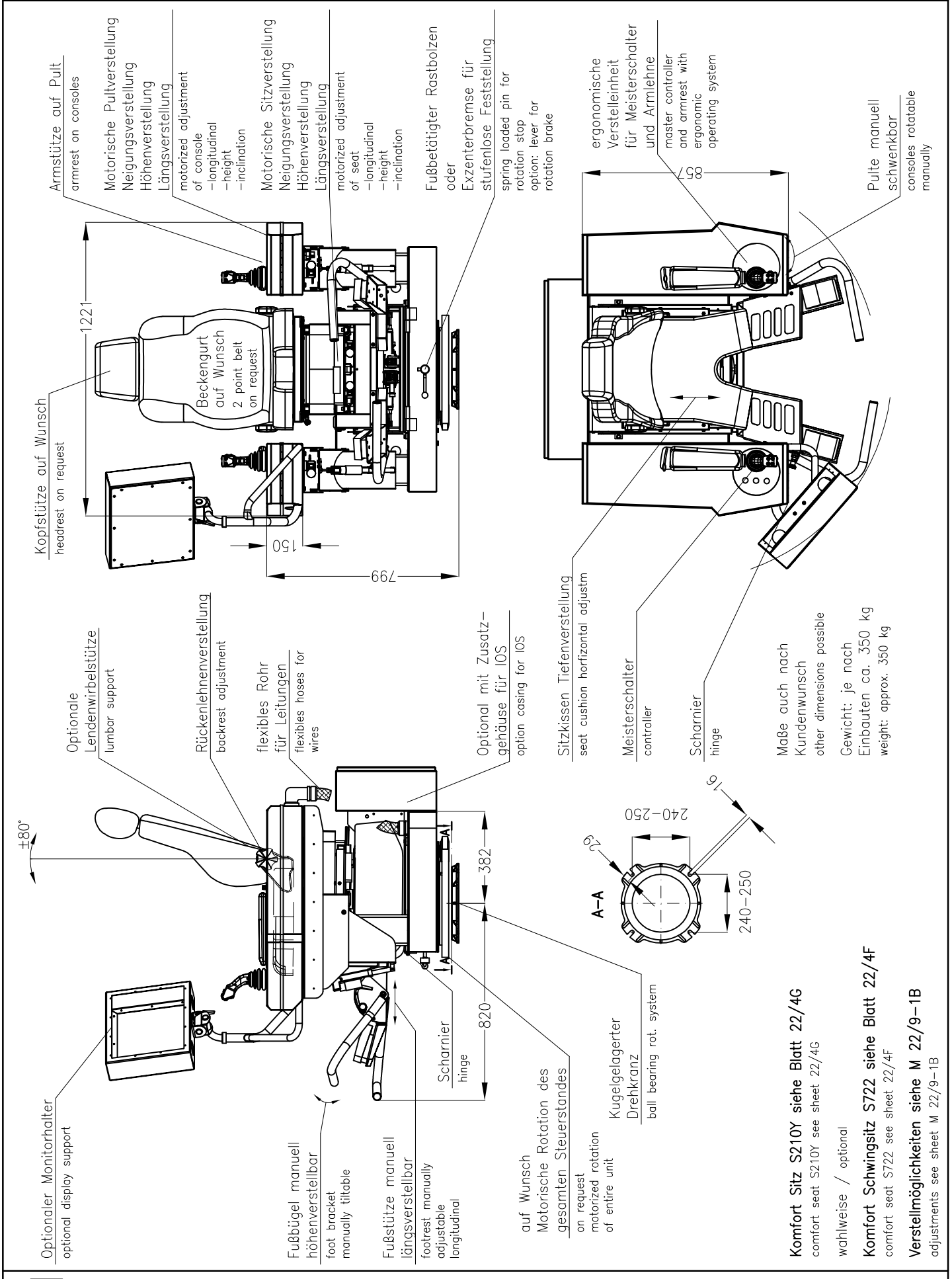

Komfort Sitz S210Y siehe Blatt 22/4G
comfort seat S210Y see sheet 22/4G

wahlweise / optional

Komfort Schwingsitz S722 siehe Blatt 22/4F
comfort seat S722 see sheet 22/4F

Verstellmöglichkeiten siehe M 22/9–1B
adjustments see sheet M 22/9–1B

Spohn+Burkhardt
Elektrotechnische Fabrik Blaubeuren

Mauergasse 5
89143 BLAUBEUREN
GERMANY

Tel. +49 7344 171-0 info@spobu.de
Fax +49 7344 171-99 www.spobu.de

Steuerstand FSMMD–SHN
Operating console FSMMD–SHN

List 7 / 2014
M 22/9-1B

Pulte manuell schwenkbar
consoles rotatable manually

Pneum. Schwingsystem mit Kompressor Höhenverstellung und autom. Anpassung der Federstärke an Fahrgewicht
pneumatic suspension by compressor height and automatic weight adjustment

Motorische Sitz Höhen– + Längsverstellung
vertical + horizontal adjustment motorized

Mech. Kopfstützenverstellung
mech. headrest adjustment

Mechanische Fußstützenverstellung
mech. footrest adjustment

Mech. Rückenlehnenverstellung optional elektrisch
mech. backrest adjustment

Mech. Sitzpolster– Längsverstellung
mech. backrest adjustment

Motorische Pult– , Sitzverstellung
Neigungsverstellung
Längsverstellung
motorized adjustment of console
–inclination
–longitudinal

Motorische Pult
Höhenverstellung
Längsverstellung
motorized adjustment of console
–height
–inclination

Spohn+Burkhardt
Elektrotechnische Fabrik Blaubeuren

Mauergasse 5
89143 BLAUBEUREN
GERMANY

Tel. +49 7344 171-0 info@spobu.de
Fax +49 7344 171-99 www.spobu.de

Steuerstand FSMMD
mit motorischer Höhen– und Horizontalverstellung
Rotating operator console with motorized adjustable chair and consoles

List 7 / 2014
M 22/9A

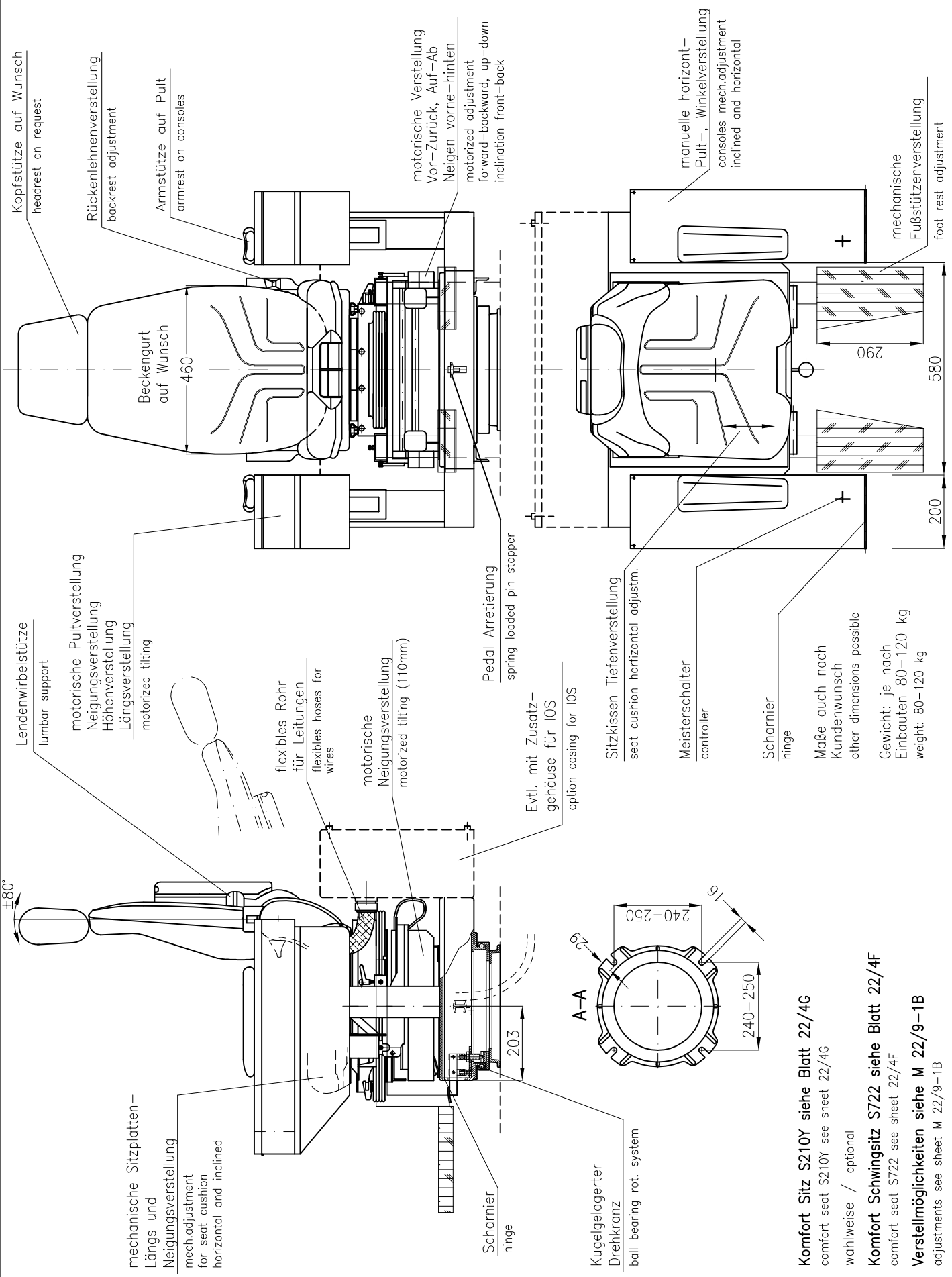

Komfort Sitz S210Y siehe Blatt 22/4G
comfort seat S210Y see sheet 22/4G

wahlweise / optional

Komfort Schwingsitz S722 siehe Blatt 22/4F
comfort seat S722 see sheet 22/4F

Verstellmöglichkeiten siehe M 22/9–1B
adjustments see sheet M 22/9–1B

Spohn+Burkhardt
Elektrotechnische Fabrik Blaubeuren

Mauergasse 5
89143 BLAUBEUREN
GERMANY

Tel. +49 7344 171-0 info@spobu.de
Fax +49 7344 171-99 www.spobu.de

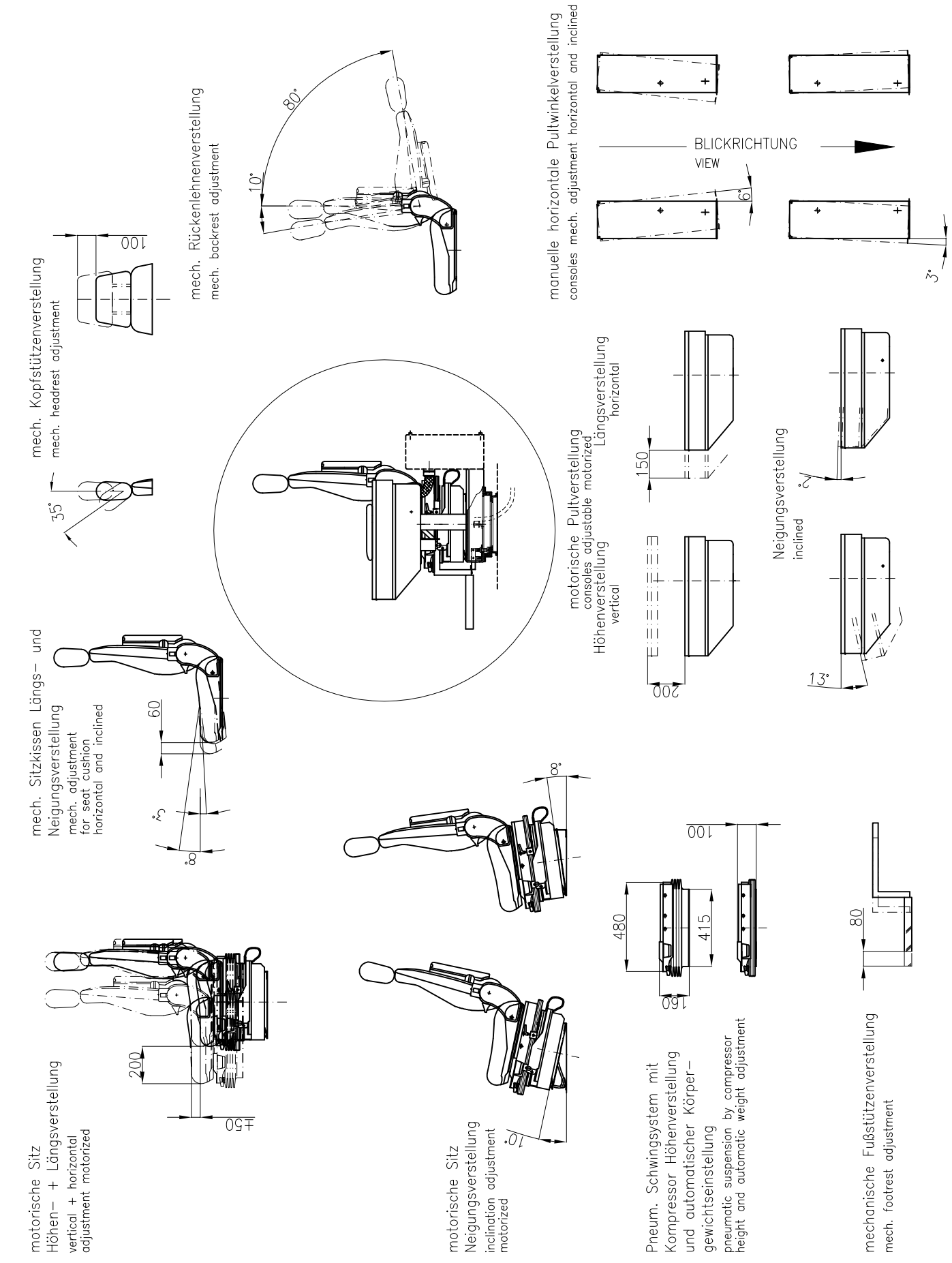

Spohn+Burkhardt
Elektrotechnische Fabrik Blaubeuren

Mauergasse 5
89143 BLAUBEUREN
GERMANY

Tel. +49 7344 171-0 info@spobu.de
Fax +49 7344 171-99 www.spobu.de

Steuerstand FSALV mit Armlehnengehäusen
Operator console FSALV with armrest case

List 7 / 2014
M 22/10A

FSALV
Stationär
stationary

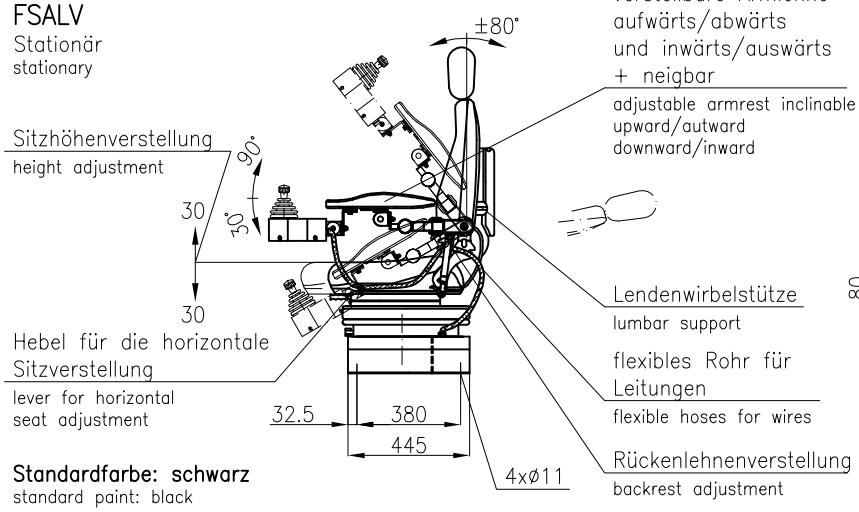

verstellbare Armlehne aufwärts/abwärts und inwärts/auswärts + neigbar
adjustable armrest inclinable upward/autward downward/inward

Lendenwirbelstütze
lumbar support

flexibles Rohr für Leitungen
flexible hoses for wires

Rückenlehnenverstellung
backrest adjustment

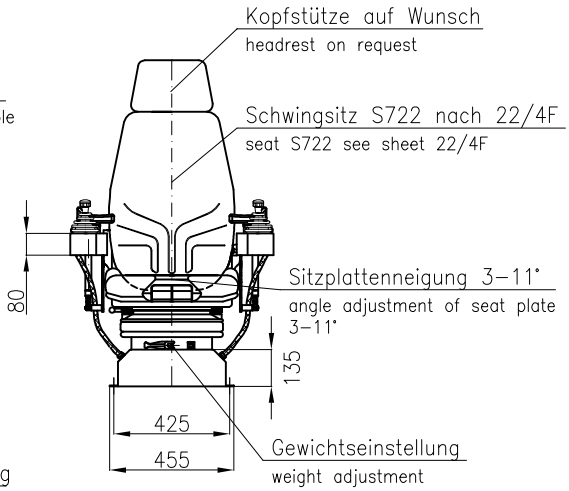

Standardfarbe: schwarz
standard paint: black

FSALVDS
Drehbar mit Drehscheibe
rotary with turning disc

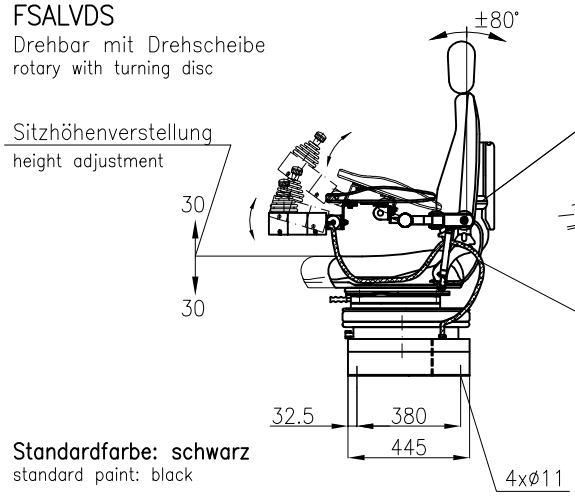

Schwingsitz S722 nach 22/4F
seat S722 see sheet 22/4F

Lendenwirbelstütze
lumbar support

flexibles Rohr für Leitungen
flexible hoses for wires

Dreheinrichtung mit Arretierung
rotation sytem with stop

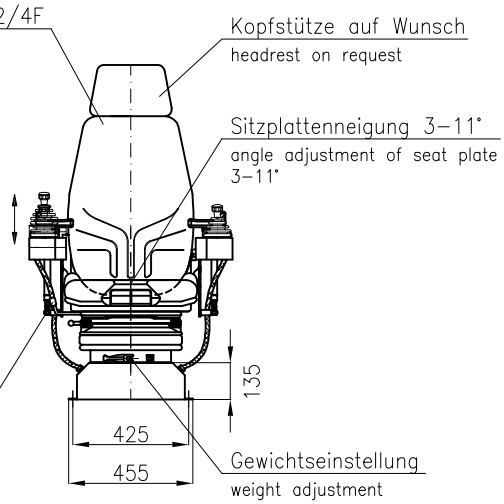

Standardfarbe: schwarz
standard paint: black

FSALVD
Drehbar mit Kugeldrehkranz
rotary with ball bearing

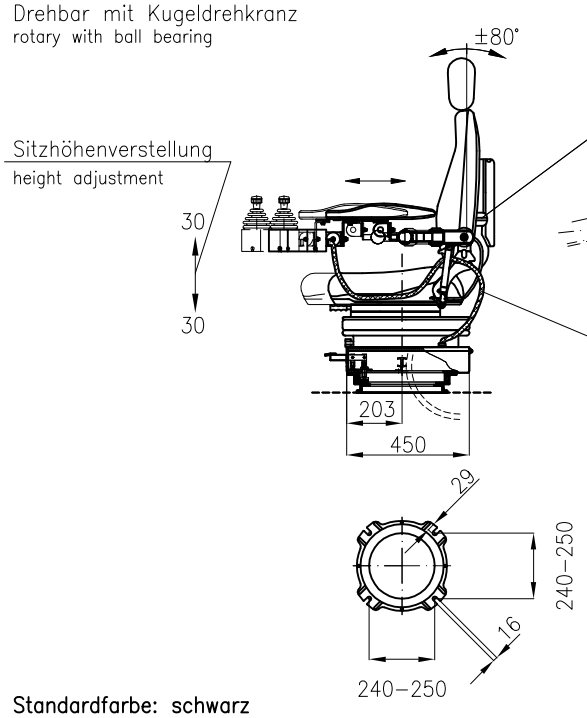

Schwingsitz S722 nach 22/4F
seat S722 see sheet 22/4F

Lendenwirbelstütze
lumbar support

flexibles Rohr für Leitungen
flexible hoses for wires

Pedal Rastbolzen
spring loaded pin stopper

Sitzkissen Tiefenverstellung
seat cushion adjustment

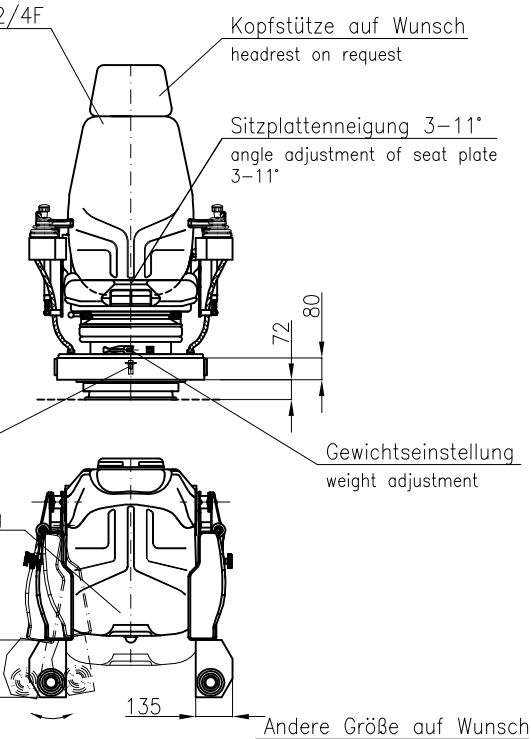

Standardfarbe: schwarz
standard paint: black

Spohn+Burkhardt
Elektrotechnische Fabrik Blaubeuren

Mauergasse 5
89143 BLAUBEUREN
GERMANY

Tel. +49 7344 171-0 info@spobu.de
Fax +49 7344 171-99 www.spobu.de

Steuerstand FSBD
Operator consoles FSBD

List 7 / 2014
M 22/12A

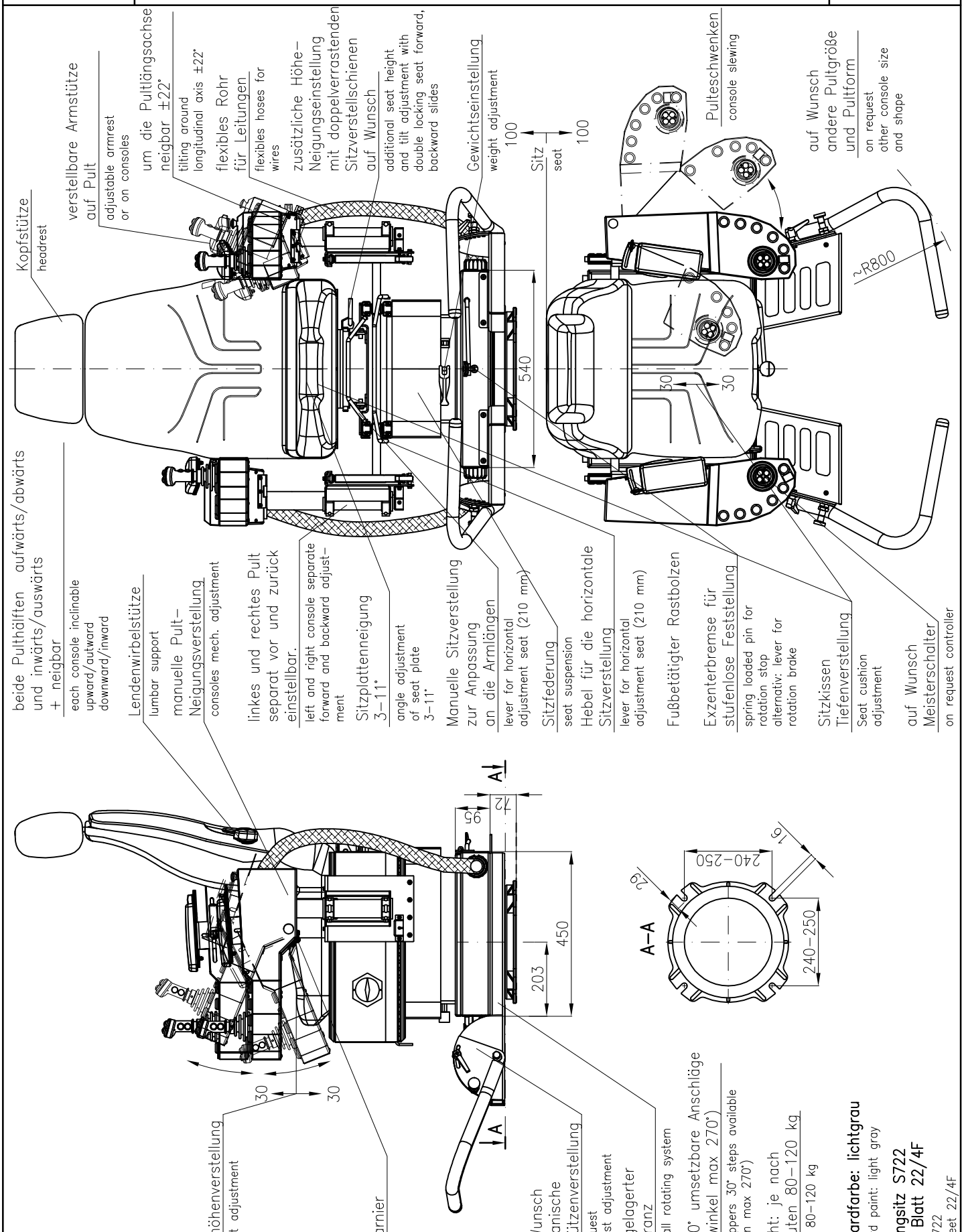

Spohn+Burkhardt
Elektrotechnische Fabrik Blaubeuren

Mauergasse 5
89143 BLAUBEUREN
GERMANY

Tel. +49 7344 171-0 info@spobu.de
Fax +49 7344 171-99 www.spobu.de

Fußtaster Aluguß SF, FT0, FST(S), FPS, FPW
Foot pedal SF, FT0, FST(S), FPS, FPW

List 7 / 2014
M 24/1

Fußtaster **SF**
foot pedal

SF_ Schutzart IP42
degree of protection IP42

SF_0d Schutzart IP56
degree of protection IP56

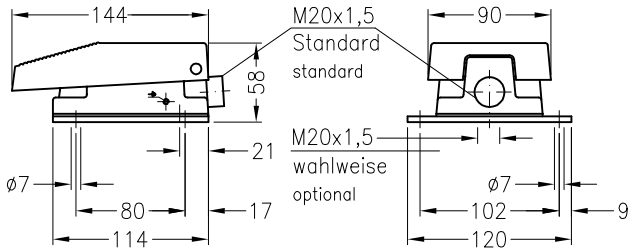

Fußtaster **FT0**
foot pedal

Schutzart IP54
degree of protection IP54

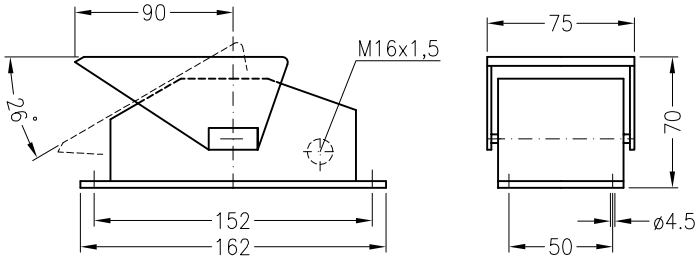

Fußtaster **FST**
foot pedal

Schutzart IP54
degree of protection IP54

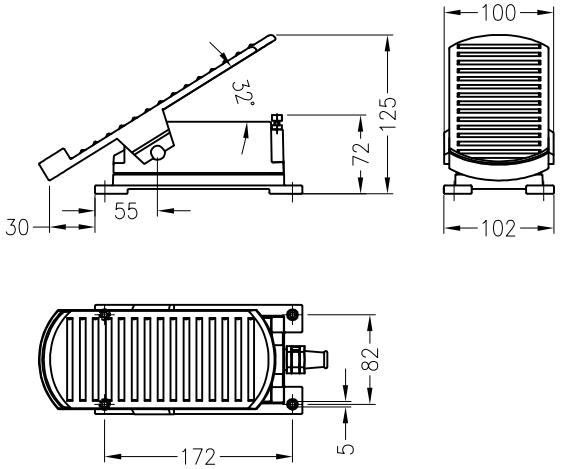

Fußtaster **FSTS**
foot pedal

Schutzart IP54
degree of protection IP54

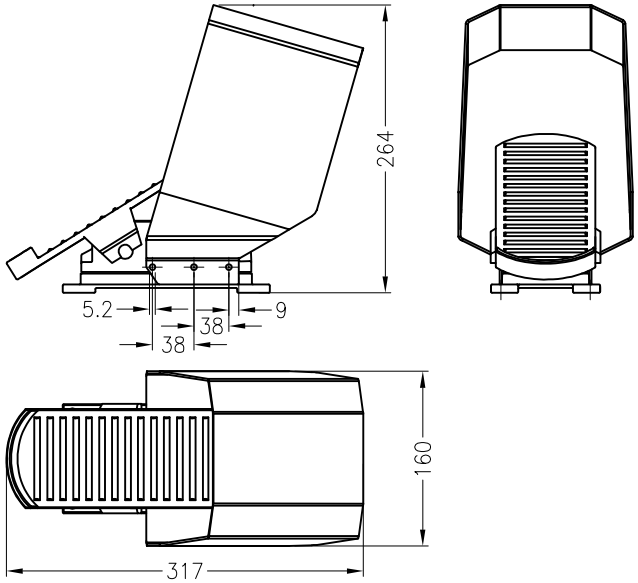

Fußtaster **FPS/FPW**
foot pedal

Schutzart IP42
degree of protection IP42

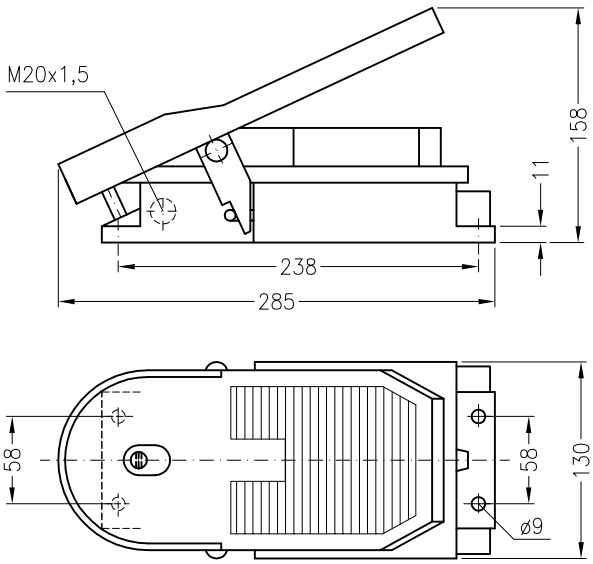

Spohn+Burkhardt
Elektrotechnische Fabrik Blaubeuren

Mauergasse 5
89143 BLAUBEUREN
GERMANY

Tel. +49 7344 171-0 info@spobu.de
Fax +49 7344 171-99 www.spobu.de

Fußwippen FW, tastend nach beiden Seiten
Foot rocker FW, with spring in center position

List 7 / 2014
M 24/2

Fußwippe **FW**
foot rocker

Schutzart IP42
degree of protection IP42

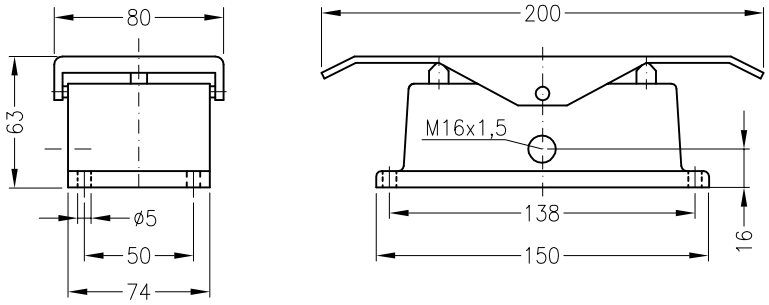

Fußwippe **FWO**
foot rocker

Schutzart IP54
degree of protection IP54

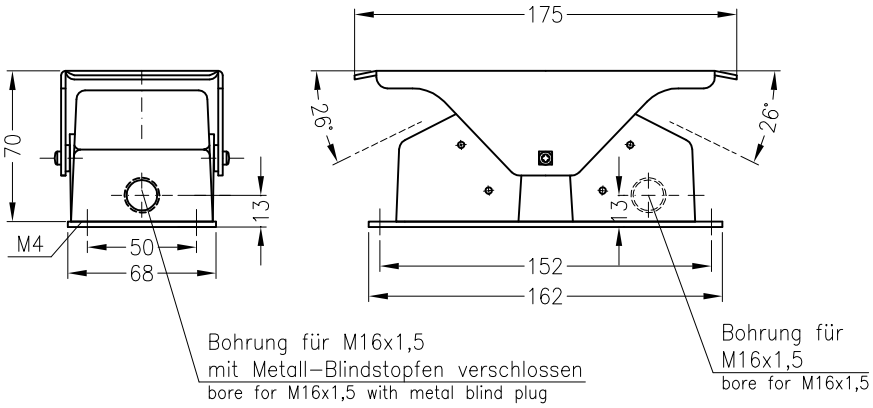

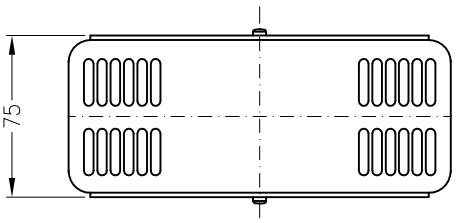

Fußwippe **FWU**
foot rocker

Frontseitig Schutzart IP42
front side degree of protection IP42

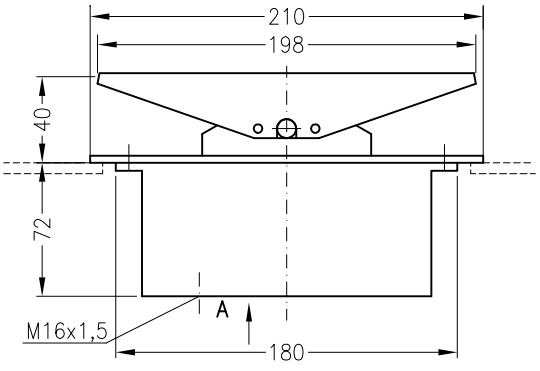

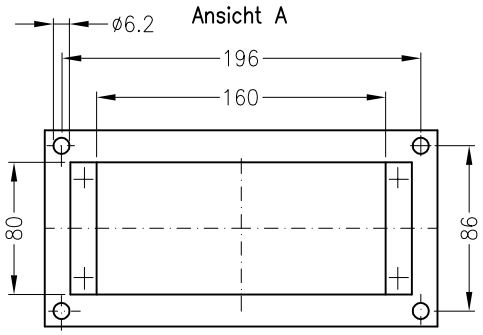

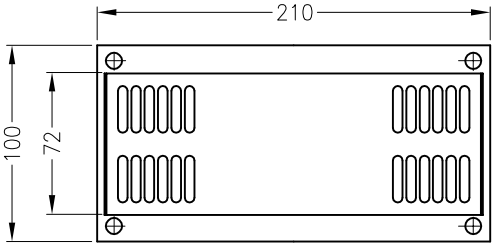

Spohn+Burkhardt
Elektrotechnische Fabrik Blaubeuren

Mauergasse 5
89143 BLAUBEUREN
GERMANY

Tel. +49 7344 171-0 info@spobu.de
Fax +49 7344 171-99 www.spobu.de

Mit flachem Deckel Od2–
With flat cover Od2–

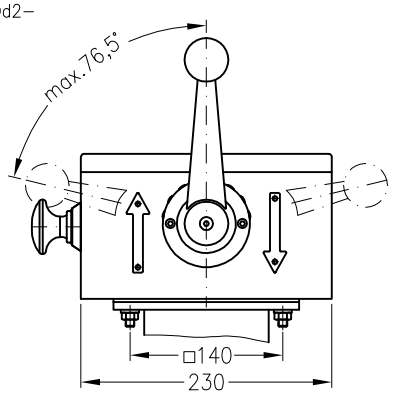

Normalausführung:
Hebel rechts, auf Wunsch links
Normally lever right, on request left

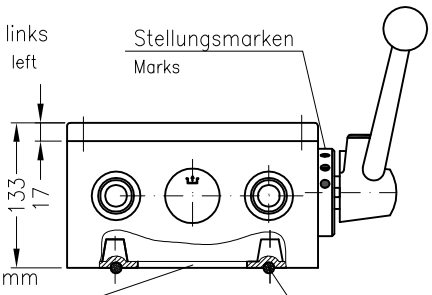

Auf Wunsch
Od2 B
Mit Kabeleinführung ø100 mm
durch den Boden
On request
Od2 B with cable entry on base

Gewicht ~8 kg
Weight ~8 kg

Dichtungsgummi
Sealing

mit Meßinstrumentenaufsatz Od2–J–
Maximale Einbaumöglichkeit: 2 Meßinstrumente 72x72 mm und 3 Meldelampen 36x24 mm
Upper part for instruments Od2–J–
Maximal installation: 2 instruments 72x72 mm and 3 lamps 36x24 mm

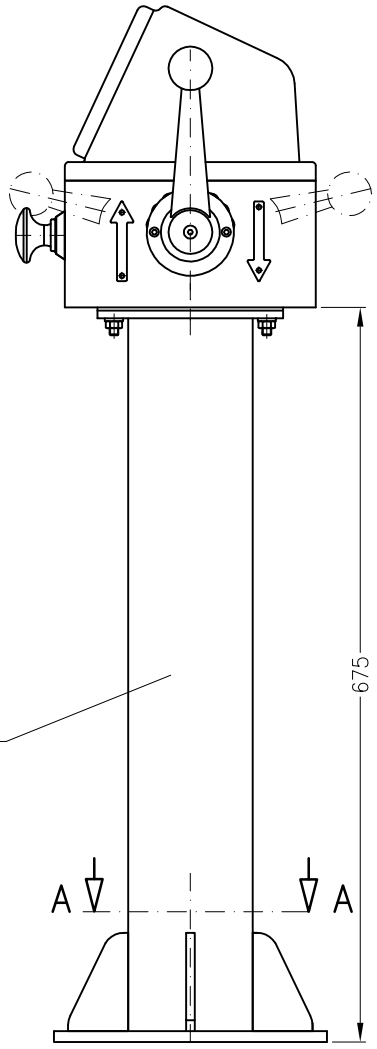

Auf Wunsch
Standrohr mit
Rechteckflansch
On request
pillar with
flange squared

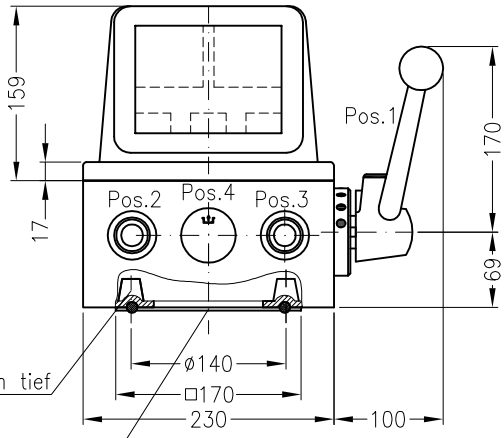

4 Gewinde
M12, 20 mm tief
4 windings

Auf Wunsch
Od2 B–J–
Mit Kabeleinführung ø100 mm
durch den Boden
On request
Od2 B–J– with cable entry on base

Gewicht mit Meß–
instrumentenaufsatz~9 kg
Weight with upper part ~9 kg

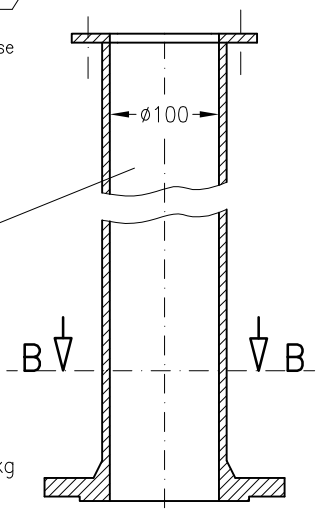

Auf Wunsch
Standrohr mit
Rundflansch
NW100 DIN 2633
On request
pillar with
flange round

Gewicht Standrohre je ~13 kg
Weight pillars per ~13 kg

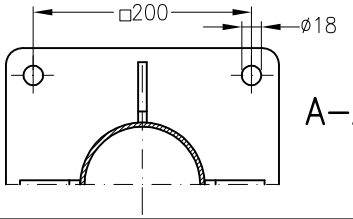

A–A

Standardfarbe: RAL 7032
standard paint: RAL 7032

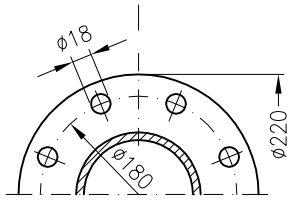

B–B

Spohn+Burkhardt
Elektrotechnische Fabrik Blaubeuren

Mauergasse 5
89143 BLAUBEUREN
GERMANY

Tel. +49 7344 171-0 info@spobu.de
Fax +49 7344 171-99 www.spobu.de

Oberdeck–Meisterschalter Od22, gußgekapselt IP56
On deck controller Od22, cast protected IP56

List 7 / 2014
M 25/1B

Mit flachem Deckel Od22–
With flat cover Od22–

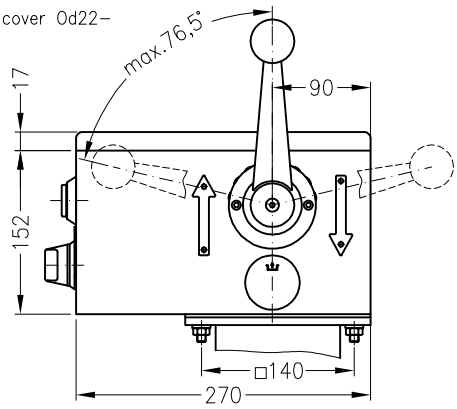

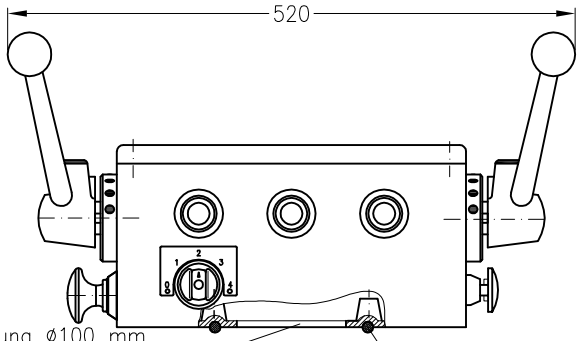

Auf Wunsch
Od22 B
Mit Kabeleinführung ø100 mm durch den Boden
On request
Od22 B with cable entry on base

Gewicht ~12 kg
Weight ~12 kg

Dichtungsgummi
Sealing

Mit Meßinstrumentenaufsatz Od22–J–
Maximale Einbaumöglichkeit: 3 Meßinstrumente 72x72 mm und 6 Meldelampen 36x24 mm
Upper part for instruments type Od22–J–
Maximal installation: 3 instruments 72x72 mm and 6 lamps 36x24 mm

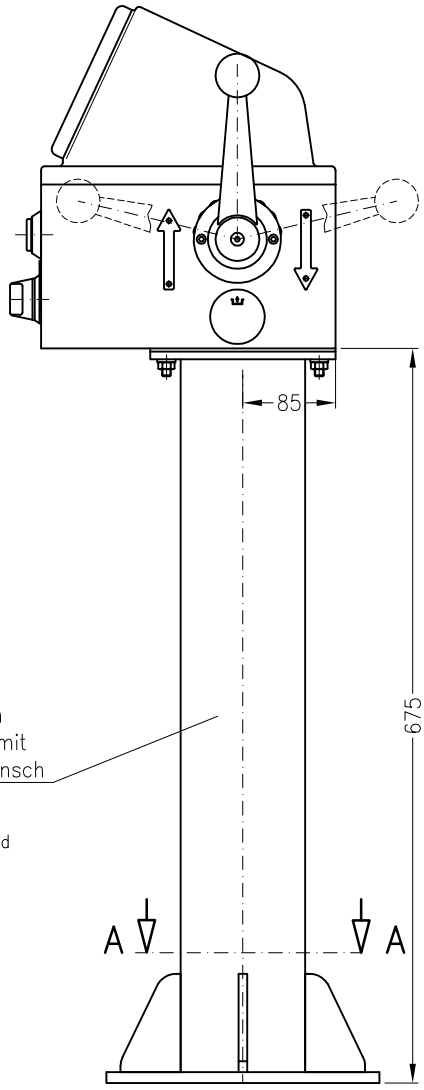

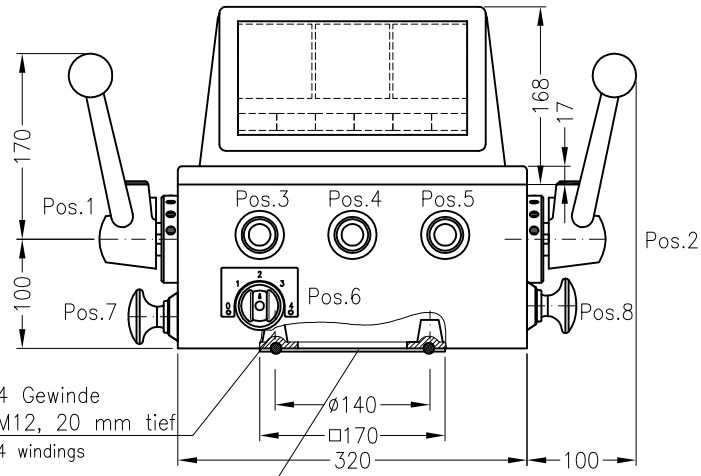

4 Gewinde
M12, 20 mm tief
4 windings

Auf Wunsch
Od22 B–J–
Mit Kabeleinführung ø100 mm durch den Boden
On request
OD22 B–J– with cable entry on base

Gewicht mit Meß–instrumentenaufsatz~14 kg
Weight with upper part ~14 kg

Auf Wunsch
Standrohr mit
Rechteckflansch
On request
pillar with
flange squared

Auf Wunsch
Standrohr mit
Rundflansch
NW100 DIN 2633
On request
pillar with
flange round

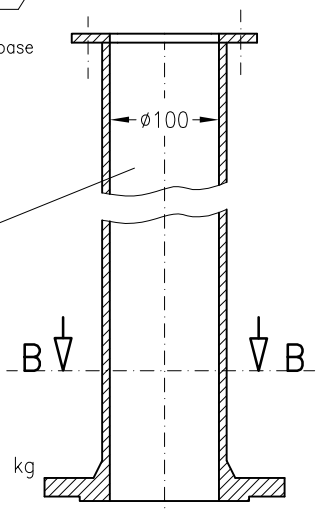

Gewicht Standrohre je ~13 kg
Weight pillars per ~13 kg

Standardfarbe: RAL 7032
standard paint: RAL 7032

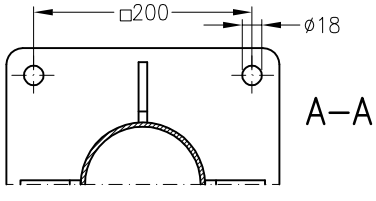

A–A

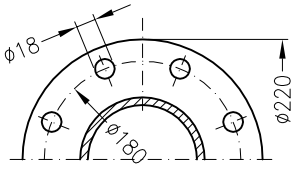

B–B

Spohn+Burkhardt
Elektrotechnische Fabrik Blaubeuren

Mauergasse 5
89143 BLAUBEUREN
GERMANY

Tel. +49 7344 171-0 info@spobu.de
Fax +49 7344 171-99 www.spobu.de

Meisterschalter – Fahrschaltung
Circuit diagram

List 7 / 2014
S 40/1

Klammerbezeichnung bedeutet Abwicklung mit Nullkontakt
Specifications in brackets means with OFF-contact

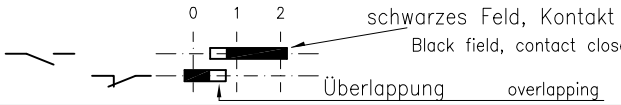

lower Senken Heben hoist
left Links Rechts right

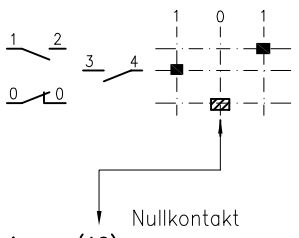

1 (10) OFF-contact

lower Senken Heben hoist
left Links Rechts right

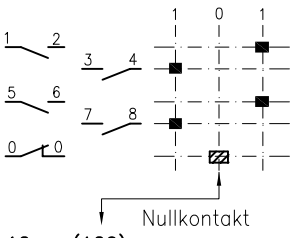

12 (120) OFF-contact

lower Senken Heben hoist
left Links Rechts right

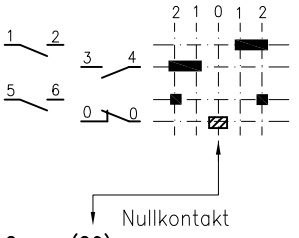

2 (20) OFF-contact

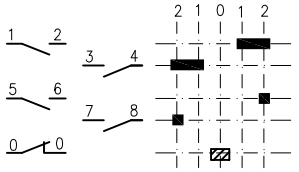

24 (240)

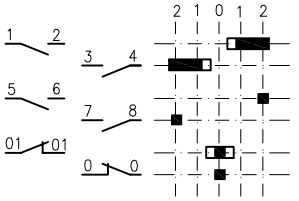

2400 A

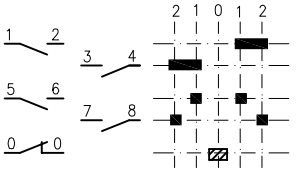

26 (260)

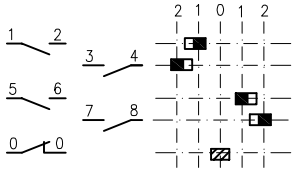

21 (210)
21 A (210 A) ohne Überlappung
without overlapping

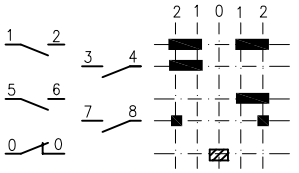

2D (2D0)

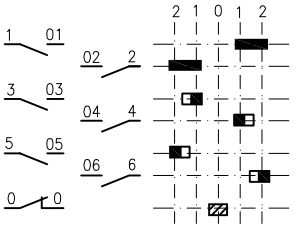

25 (250)

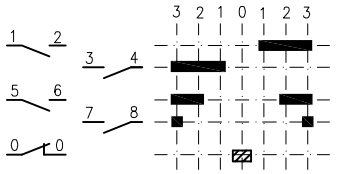

3 (30)

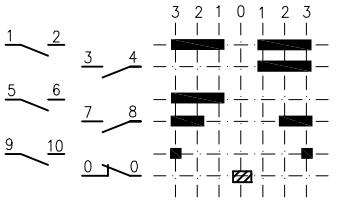

3D (3 D0)

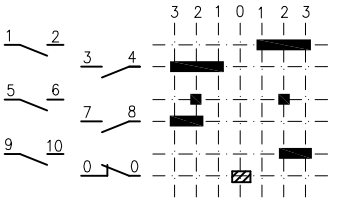

3C (3 C0)

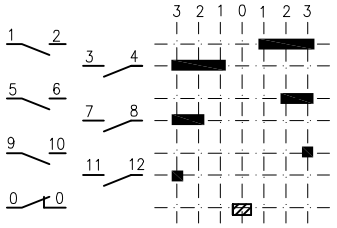

3B (3 B0)

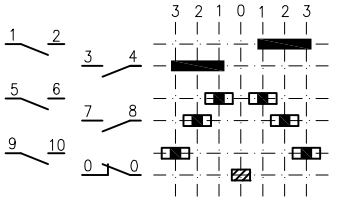

31 (310)

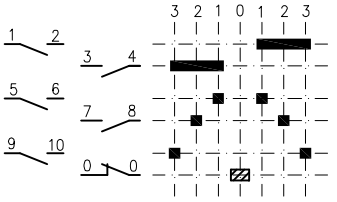

33 (330)

Spohn + Burkhardt
Elektrotechnische Fabrik Blaubeuren

Mauergasse 5
89143 BLAUBEUREN
GERMANY

Tel. +49 7344 171-0 info@spobu.de
Fax +49 7344 171-99 www.spobu.de

Meisterschalter – Fahrschaltung
Circuit diagram

List 7 / 2014
S 40/2

Klammerbezeichnung bedeutet Abwicklung mit Nullkontakt
Specifications in brackets means with OFF-contact

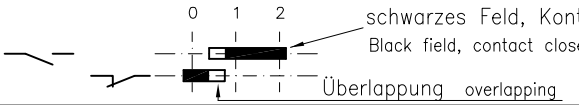

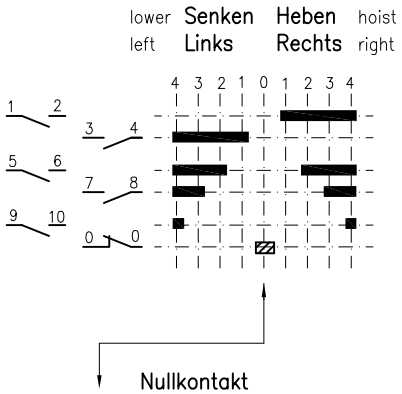

4 (40) OFF-contact

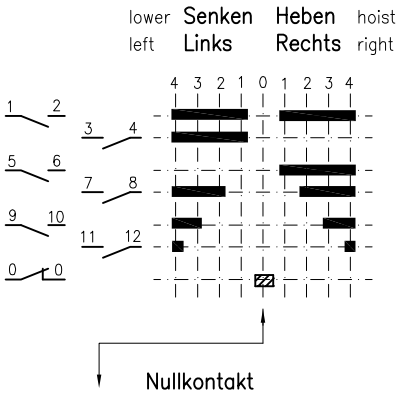

4 D (4D0) OFF-contact

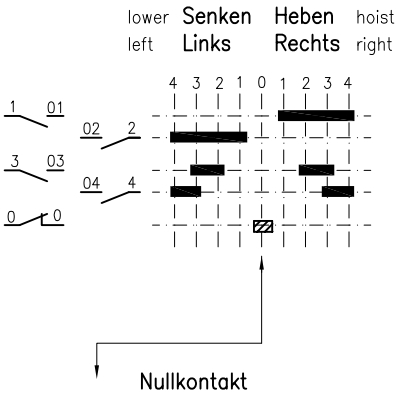

42 (420) OFF-contact

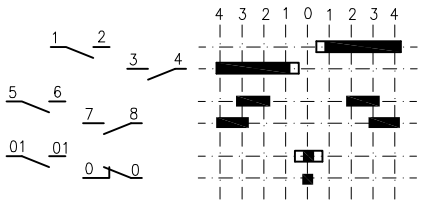

4200 A

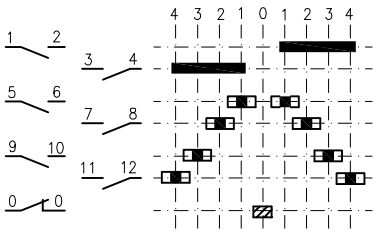

41 (410)

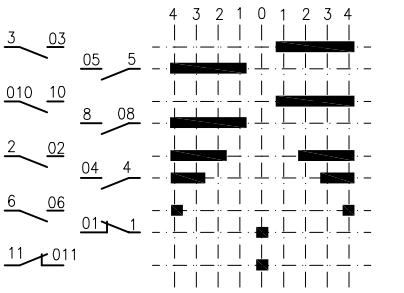

ak + aky
NESP 126 0106

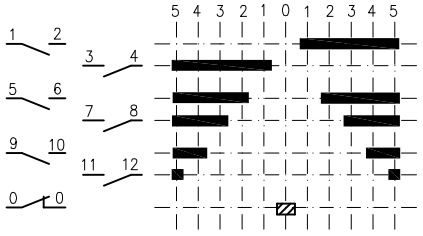

5 (50)

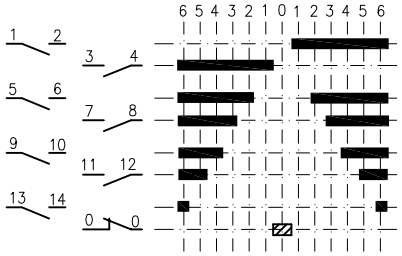

6 (60)

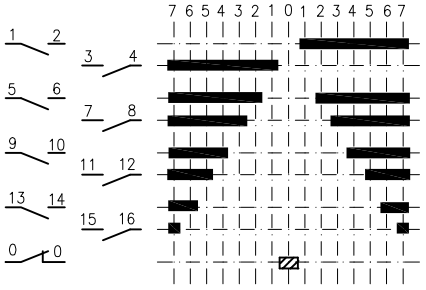

7 (70)

Spohn + Burkhardt
Elektrotechnische Fabrik Blaubeuren

Mauergasse 5
89143 BLAUBEUREN
GERMANY

Tel. +49 7344 171-0 info@spobu.de
Fax +49 7344 171-99 www.spobu.de

List 7 / 2014 S 40/3	Meisterschalter – Fahrschaltung Circuit diagram	List 7 / 2014 S 40/3

Klammerbezeichnung bedeutet Abwicklung mit Nullkontakt
Specifications in brackets means with OFF-contact

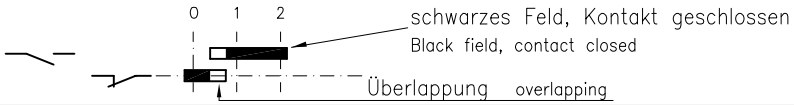

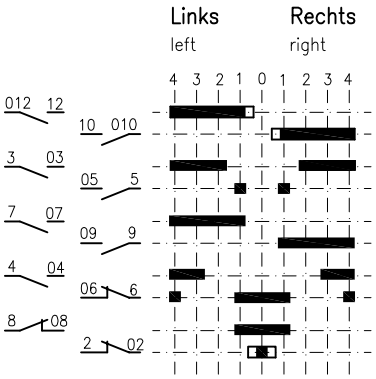

faky
NESP 126 0104

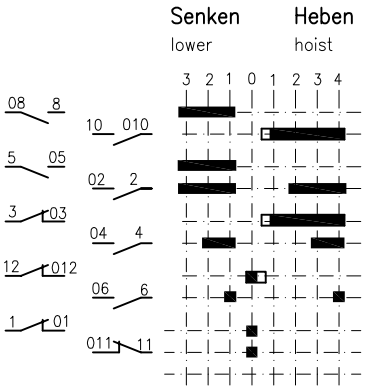

uky (0)
NESP 126 0108

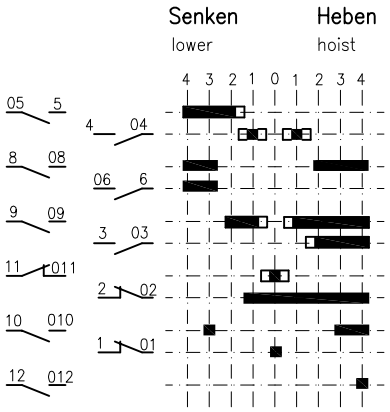

ek (0)
eky (0)
NESP 126 1027

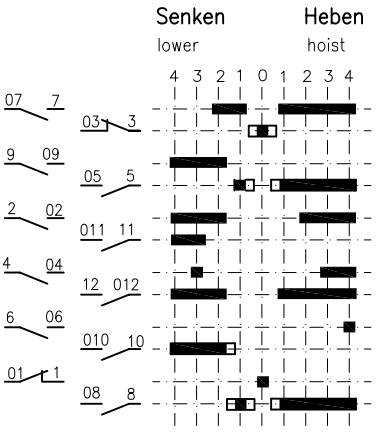

ehky (0)
NESP 126 0103

Spohn + Burkhardt
Elektrotechnische Fabrik Blaubeuren
Mauergasse 5
89143 BLAUBEUREN
GERMANY
Tel. +49 7344 171-0 info@spobu.de
Fax +49 7344 171-99 www.spobu.de

Normale Schaltungen VCS0, andere Schaltungen auf Anfrage
Standard circuits VCS0, other circuits on request

List 7 / 2014
S 40/4

Typenzusatz 0 – mit Nullkontakt
Additional type 0 – with OFF-contact

Schaltrichtung
Switching direction

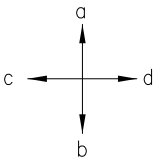

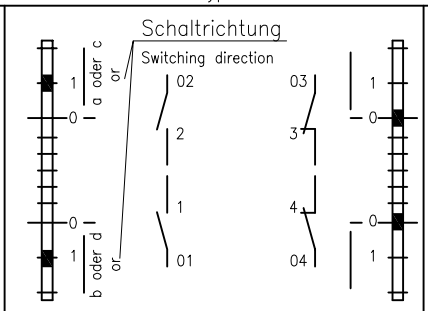

1 10 100

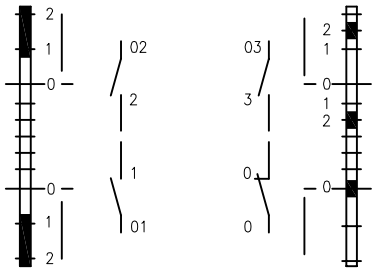

2 20

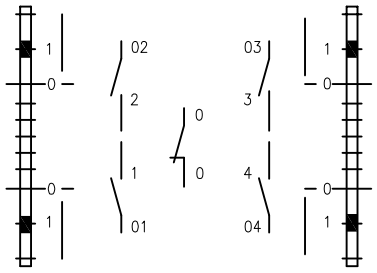

12 120

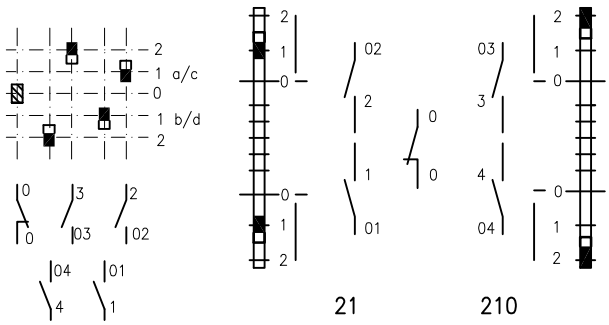

21 210

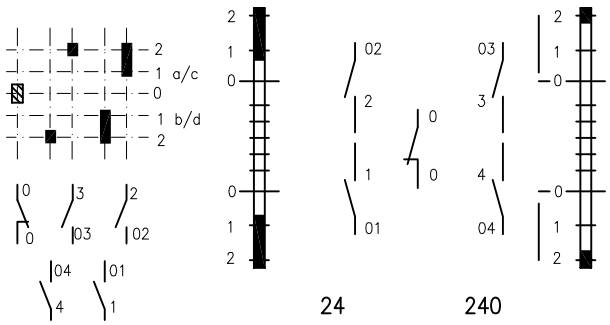

24 240

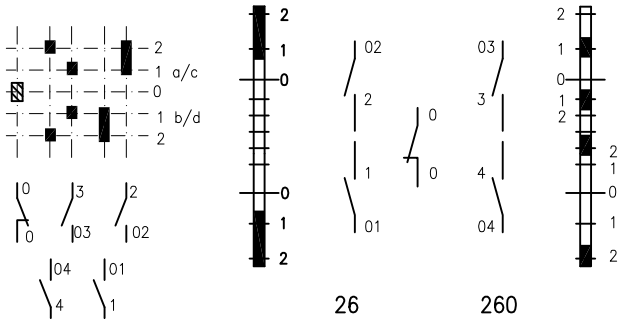

26 260

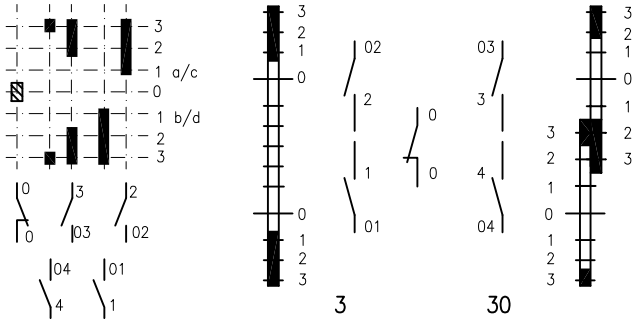

3 30

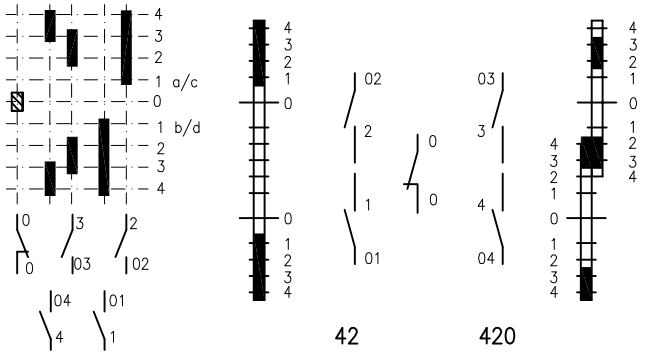

42 420

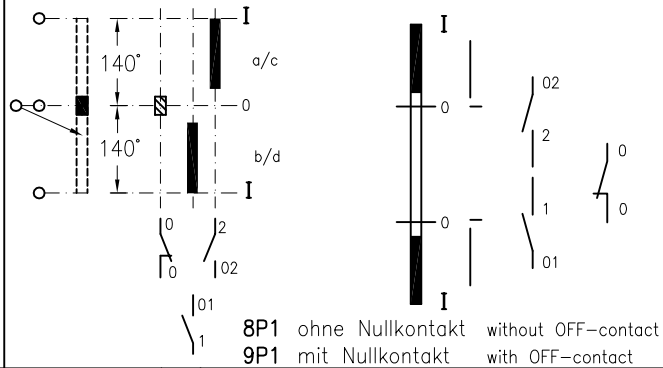

8P1 ohne Nullkontakt without OFF-contact
9P1 mit Nullkontakt with OFF-contact

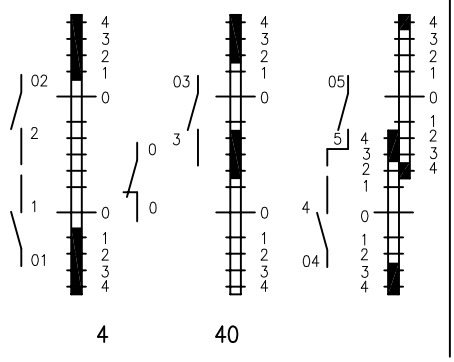

4 40

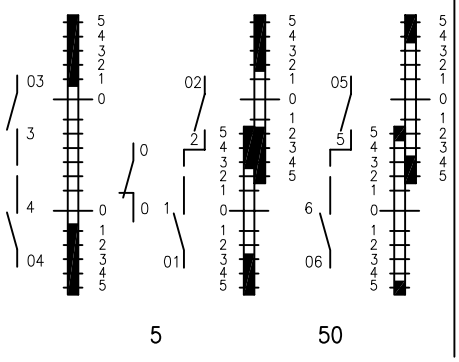

5 50

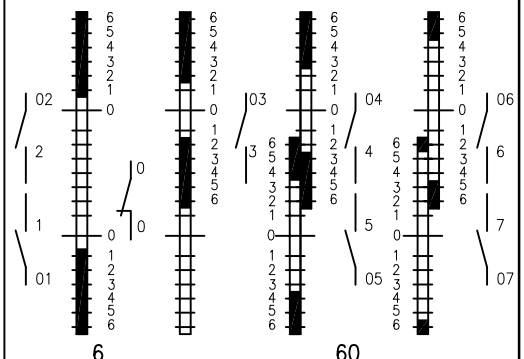

6 60

Spohn + Burkhardt
Elektrotechnische Fabrik Blaubeuren

Mauergasse 5
89143 BLAUBEUREN
GERMANY

Tel. +49 7344 171-0 info@spobu.de
Fax +49 7344 171-99 www.spobu.de

Stufenlose Kontaktabwicklungen für Meisterschalter VNS0 / NNS0 mit Potentiometer oder Encoder

Stepless contact circuits for controller VNS0 / NNS0 with potentiometer or encoder

List 7 / 2014
S 40/5

PN

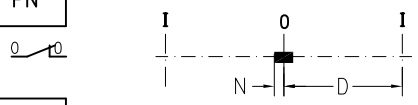

PNN

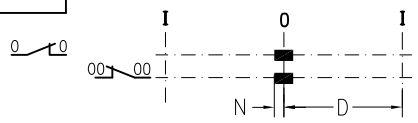

8P1

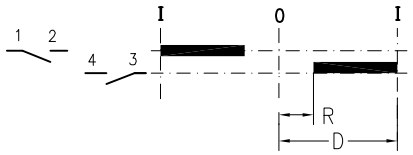

9P1

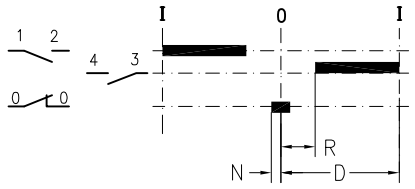

8P1A

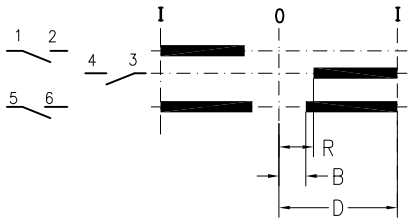

9P1A

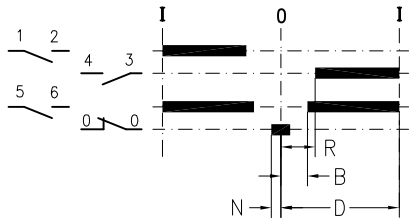

8P2

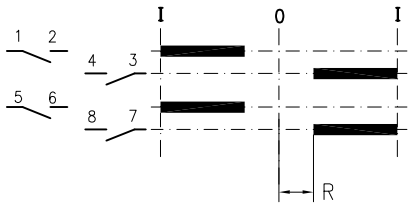

8P20

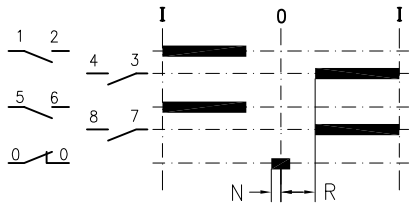

8P2A

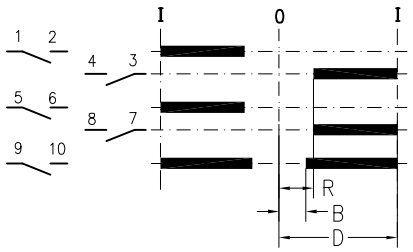

10P

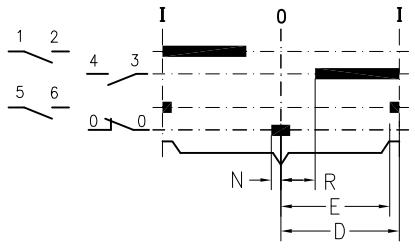

P0E

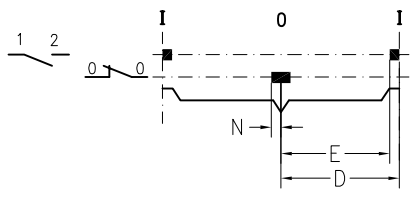

Rastungen:
Notches:

A: nur Nullrastung, z.B., bei 9P1
Rastenscheibe NS037-0K mit einer Rastenrolle.
only 0-notching, e.g., 9P1
notching disc NS037-0K with one notching role.

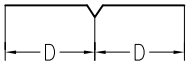

B: Nullrastung und fühlbare Anfangsrasten, z.B., bei 9P1S (Schaltung mit Zusatz: S)
Rastenscheibe NS037-0K mit zwei Rastenrollen.
0-notching and feeling starting steps, e.g. 9P1S (additional "S" in contact circuit)
notching disc NS037-0K with two notching roles.

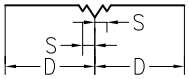

C: Nullrastung und spürbare Endstellung, z.B., bei 10P
Rastenscheibe NS037-F3-2 bei VNS0
Rastenscheibe NNS050-12 bei NNS0
0-notching and feeling ends, e.g. 10P
cam NS037-F3-2 for VNS0
cam NNS050-12 for NNS0

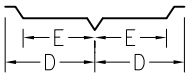

Einsatzpunkte Kontakte:
Operation of contacts:

Bezeichnung Drehwinkel Rotation angle	Drehwinkel Schalterwelle bei Meisterschalter VNS0 Angle of VNS0-axis	Drehwinkel Schalterwelle bei Meisterschalter NNS0 Angle of NNS0-axis
N	5°	5°
B	14°	14°
R	18°	18°
E	120°	87°
D	126°	92°

Toleranz: +- 2%
Tolerance: +- 2%

Hinweise:

Das Übersetzungsverhältnis:
Hebelauslenkung : Drehung Schalterwelle beträgt bei Meisterschaltern VNS0 bzw.NNS0: 3,5.
Sicheres Überlappen zweier Kontakte oder sicheres Öffnen/Schließen eines Kontaktes vor dem Schließen/Öffnen des zweiten bei Umschaltvorgängen sind im Rahmen der Schaltabwicklungen sinnvolle und erfüllbare Forderungen. Ein absolutes gleichzeitiges Schalten zweier Kontakte können wir hingegen nicht garantieren.

Note:

Ratio:
lever rotation to axis for VNS0 and NNS0 is 3,5.
Secure open/close at next contact may be reasonable and practicable in the range of switch sequences.
Switching at same time cannot be ensured.

Legende:
Legend:

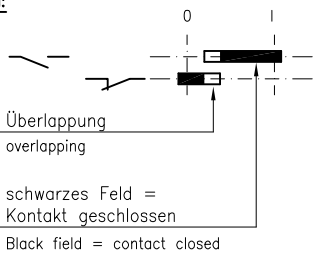

Spohn + Burkhardt
Elektrotechnische Fabrik Blaubeuren

Mauergasse 5
89143 BLAUBEUREN
GERMANY

Tel. +49 7344 171-0 info@spobu.de
Fax +49 7344 171-99 www.spobu.de

Potentiometer– oder Encoderschaltungen mit Stellungsmarkierungen

Circuits for potentiometer and encoders with notch feeling

List 7 / 2014
S 40/5A

4PN

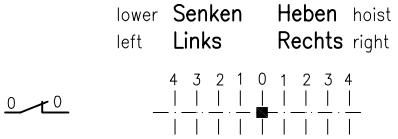

5PN

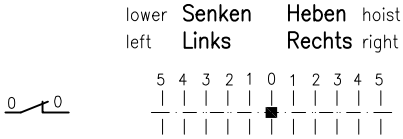

6PN

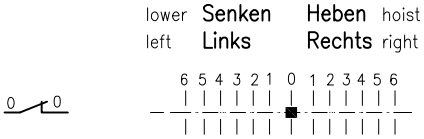

4P

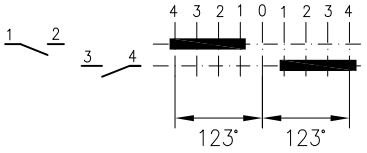

5P

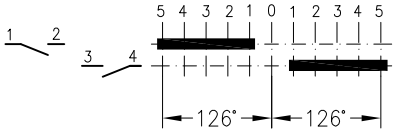

6P

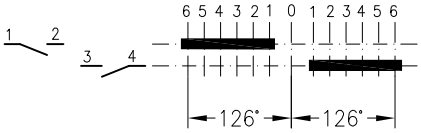

4P0
4P00

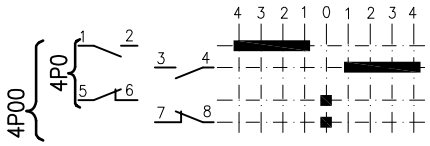

5P0
5P00

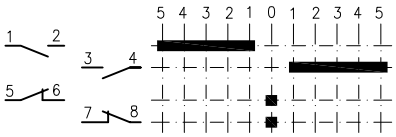

6P0
6P00

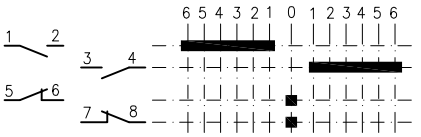

4P0E

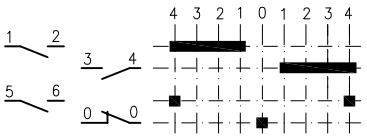

5P0E

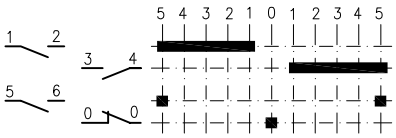

6P0E

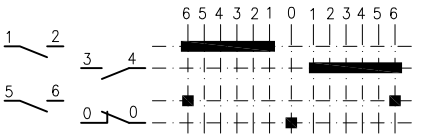

4P2

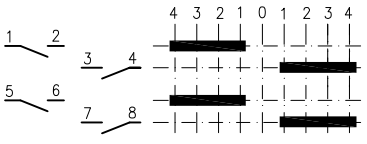

5P2

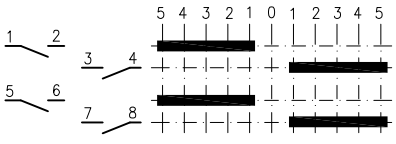

6P2

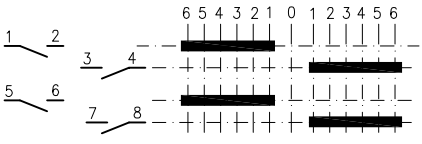

4P20

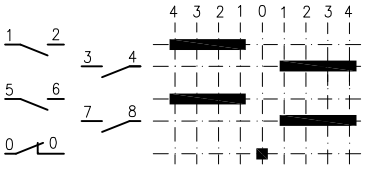

5P20

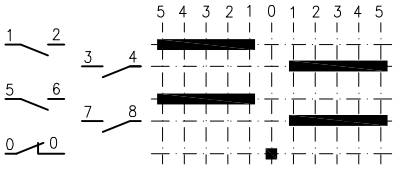

6P20

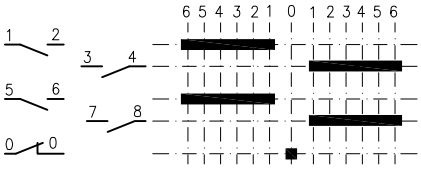

Spohn + Burkhardt
Elektrotechnische Fabrik Blaubeuren

Mauergasse 5
89143 BLAUBEUREN
GERMANY

Tel. +49 7344 171-0 info@spobu.de
Fax +49 7344 171-99 www.spobu.de

Stufen– und Potentiometerschaltungen mit Mikroschaltern
Contact circuits with micro–switches

List 7 / 2014
S 40/6

Für 1–0–1 Stellungen
For 1–0–1 steps

M

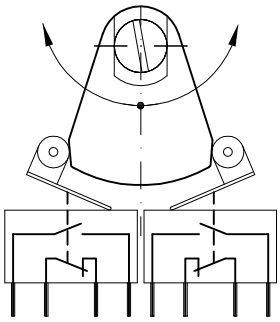

ohne Nullrastung / without zero notch

M1

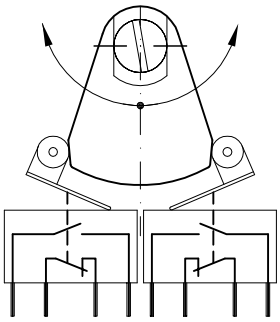

mit Nullrastung / with zero notch

Potentiometer circuits

MP

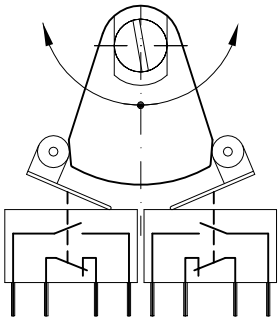

ohne Nullrastung / without zero notch

MP1

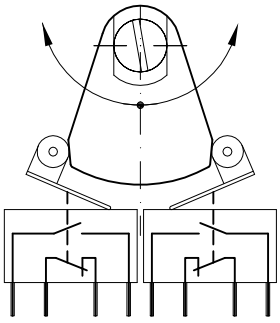

mit Nullrastung / with zero notch

MP5

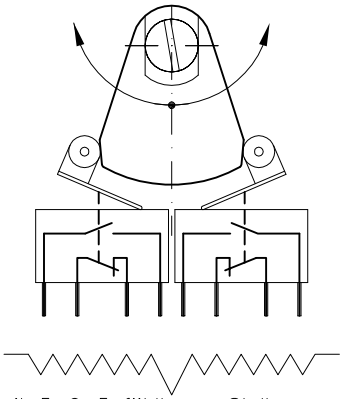

mit 5–0–5 fühlbaren Stellungen
und Nullrastung
with 5–0–5 notch feeling and zero notch

Beispiel:
Anschlußbelegung bei Potentiometerschaltung mit Null– und Richtungskontakte

Example:
Connection at potentiometer circuit with zero and direction contacts

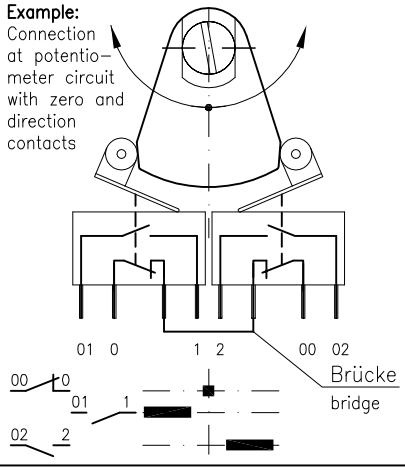

Hinweis: schematische Darstellung einer Achse
Note: schematic design of one axis

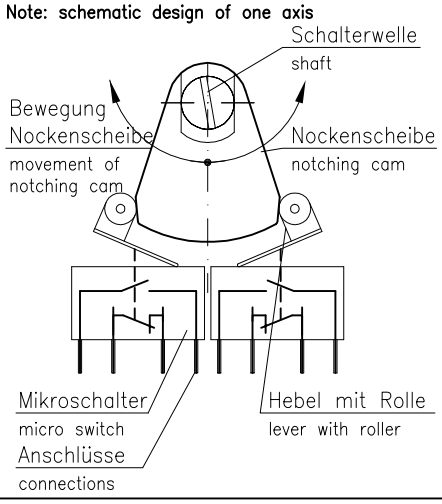

Spohn + Burkhardt
Elektrotechnische Fabrik Blaubeuren

Mauergasse 5
89143 BLAUBEUREN
GERMANY

Tel. +49 7344 171-0 info@spobu.de
Fax +49 7344 171-99 www.spobu.de

Kontaktabwicklungen für Kleinmeisterschalter GM0N, SM0N
Contact circuits for controller GM0N, SM0N

List 7 / 2014
S 40/7

Schaltung 1:
circuit

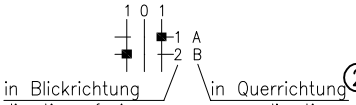

Kontaktanordnung:
contact arrangement

Ansicht von unten/ botton view

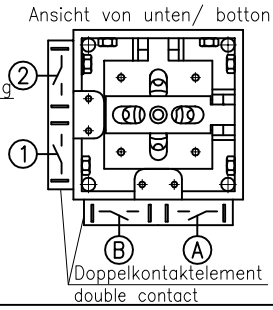

Ansicht Hebelseite:
top view

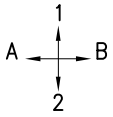

Schaltung 10:
circuit

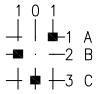

Kontaktanordnung:
contact arrangement

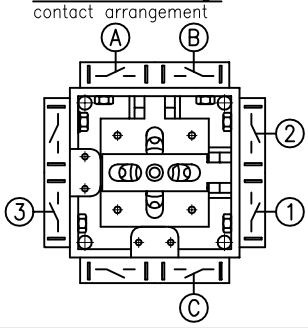

Schaltung 2 bzw. 20:
circuit

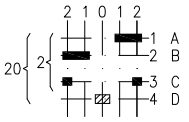

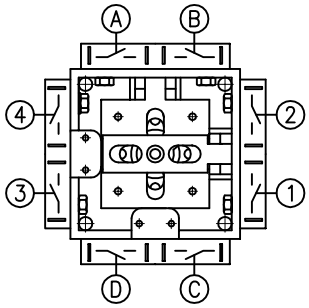

Schaltung 24 bzw. 240:
circuit

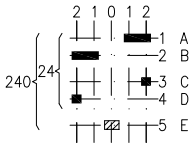

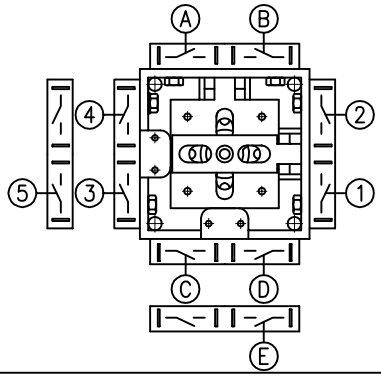

Schaltung 3 bzw. 30:
circuit

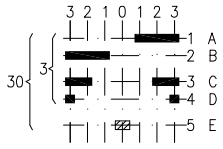

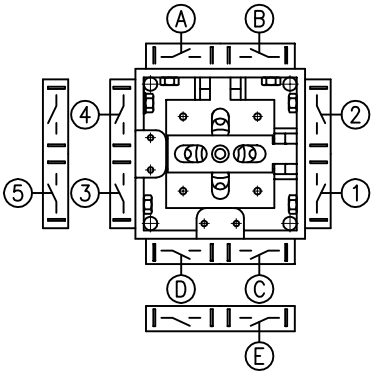

Schaltung 4 bzw. 40:
circuit

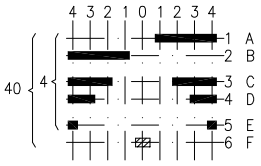

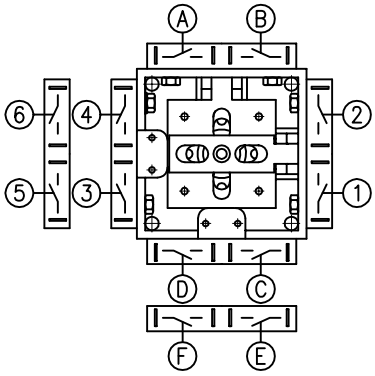

Schaltung 42 bzw. 420:
circuit

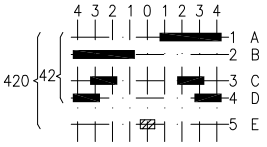

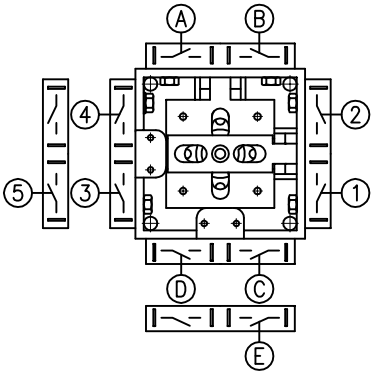

Schaltung 5 bzw. 50:
circuit

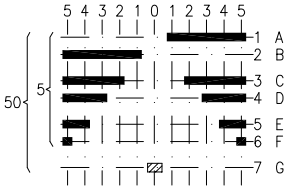

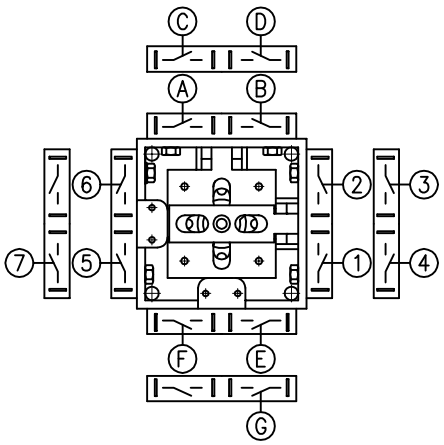

Schaltung 8P1:
circuit

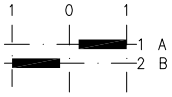

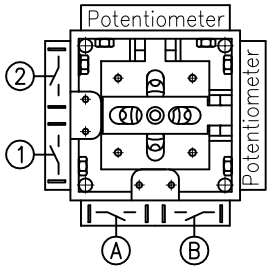

Schaltung 9P1:
circuit

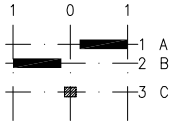

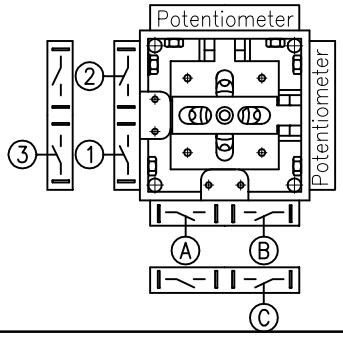

Spohn + Burkhardt
Elektrotechnische Fabrik Blaubeuren

Mauergasse 5
89143 BLAUBEUREN
GERMANY

Tel. +49 7344 171-0 info@spobu.de
Fax +49 7344 171-99 www.spobu.de

Gummi– und Lederstulpen
Rubber and leather boot

E 1/1
2014

M024A 10316
für Meisterschalter M0, M0N GM0N, SM0N

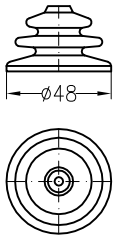

M024Z 12024
M0, M0N, GM0N, SM0N

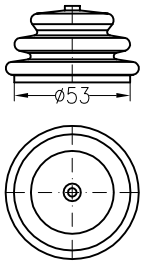

ST0–07 12651
ST0

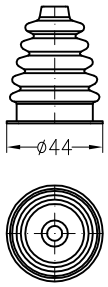

ST2–04 23810
ST2

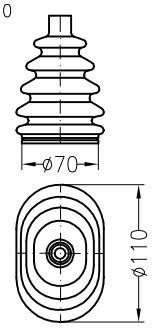

V040KE 12210
für Meisterschalter VCS0, CS1 mit Rosette 72x72 mm, VCS0 mit Stulpenhalterring S0

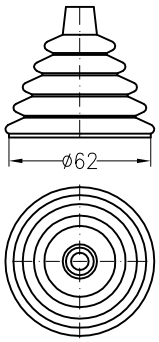

V040KE2 28748
CS0, CS1, VNS0, NNS0

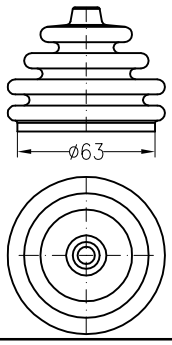

V040KE2–K 30285
CS0, CS1, VNS0, NNS0
kältebeständig bis –40°

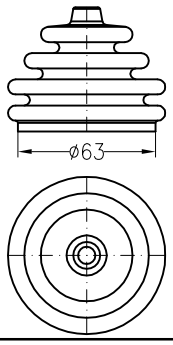

V041K 11426
CS1_S, VCS0_S mit Stulpenhalterring

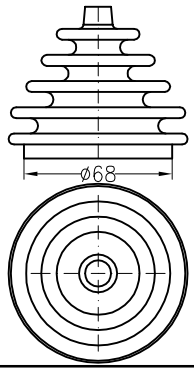

V041N 11960
für Meisterschalter VCS0, VNS0, NS3 mit Rosette 96x96 mm

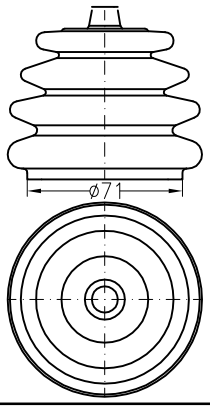

V041NK 30283
VCS0, VNS0, NS3
mit Rosette 96x96 mm
kältebeständig bis –40°

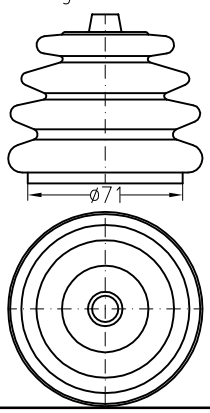

V041N–UG 23220, **V041N–UGA** 23588
V041N–UGC 23588
V041N–UGD 13222
V041N–UGN 16372
VCS0, VNS0

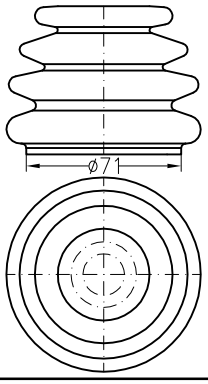

V041K–G9 28747
VCS0, VNS0 mit G9 Griff

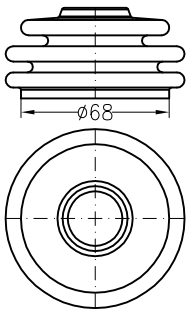

NS0–GG0 13233
für Meisterschalter NS0–GG

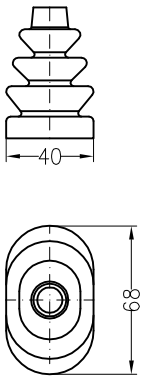

V184GG 18147
NS2–GG

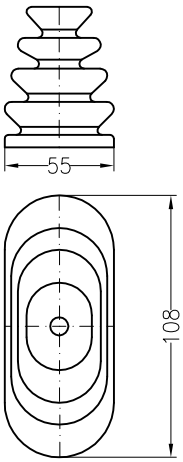

V041L 18076 **VV041L–12** 28414
VCS0, VNS0 mit Rosette 96x96 mm

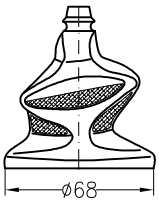

V184K 11700
NS2, VNS2

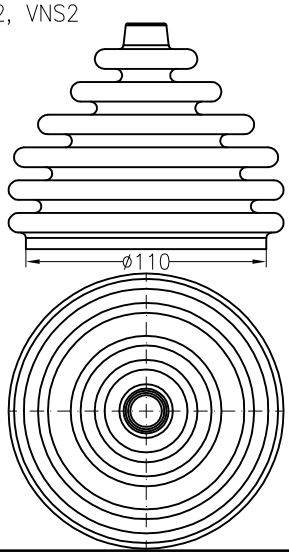

Spohn+Burkhardt
Elektrotechnische Fabrik Blaubeuren

Mauergasse 5
89143 BLAUBEUREN
GERMANY

Tel. +49 7344 171-0 info@spobu.de
Fax +49 7344 171-99 www.spobu.de

Spohn+Burkhardt
Elektrotechnische Fabrik Blaubeuren
Mauergasse 5
89143 BLAUBEUREN
Tel. +49 7344 171-0
Fax +49 7344 171-99
info@spobu.de
www.spobu.de

Ersatzteile Griff UG

Spare parts handle

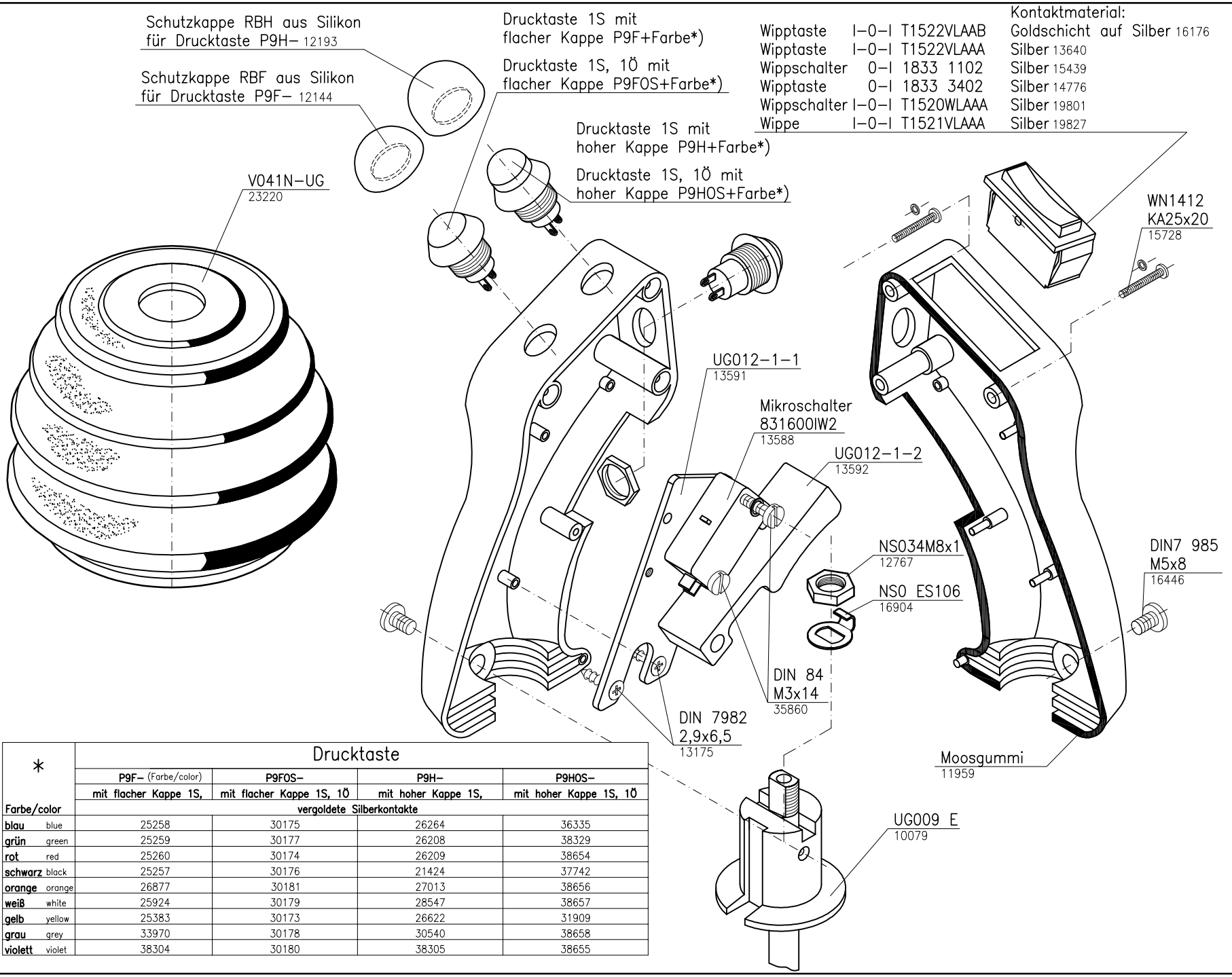

*	Drucktaste			
	P9F– (Farbe/color)	P9FOS–	P9H–	P9HOS–
Farbe/color	mit flacher Kappe 1S,	mit flacher Kappe 1S, 1Ö	mit hoher Kappe 1S,	mit hoher Kappe 1S, 1Ö
	vergoldete Silberkontakte			
blau blue	25258	30175	26264	36335
grün green	25259	30177	26208	38329
rot red	25260	30174	26209	38654
schwarz black	25257	30176	21424	37742
orange orange	26877	30181	27013	38656
weiß white	25924	30179	28547	38657
gelb yellow	25383	30173	26622	31909
grau grey	33970	30178	30540	38658
violett violet	38304	30180	38305	38655

E 3/3-3
2014

spohn+burkhardt
Elektrotechnische Fabrik Blaubeuren
Mauergasse 5
89143 BLAUBEUREN
GERMANY
Tel. +49 7344 171-0
Fax +49 7344 171-99
info@spobu.de
www.spobu.de

Ersatzteile Griff UGN
Spare parts handle

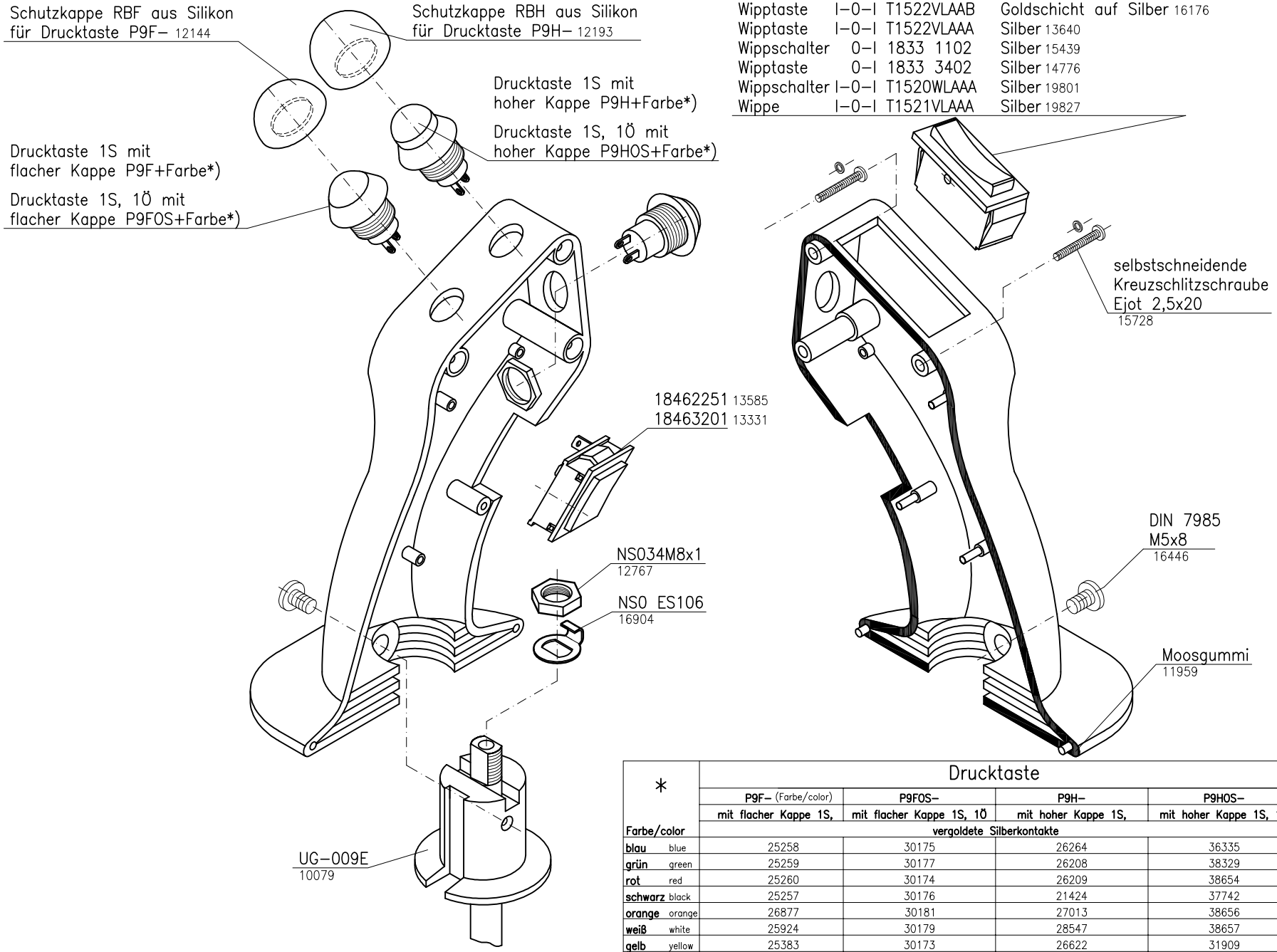

			Kontaktmaterial:
Wipptaste	I–0–I	T1522VLAAB	Goldschicht auf Silber 16176
Wipptaste	I–0–I	T1522VLAAA	Silber 13640
Wippschalter	0–I	1833 1102	Silber 15439
Wipptaste	0–I	1833 3402	Silber 14776
Wippschalter	I–0–I	T1520WLAAA	Silber 19801
Wippe	I–0–I	T1521VLAAA	Silber 19827

*	Drucktaste			
	P9F– (Farbe/color)	P9F0S–	P9H–	P9H0S–
	mit flacher Kappe 1S,	mit flacher Kappe 1S, 1Ö	mit hoher Kappe 1S,	mit hoher Kappe 1S, 1Ö
Farbe/color	vergoldete Silberkontakte			
blau blue	25258	30175	26264	36335
grün green	25259	30177	26208	38329
rot red	25260	30174	26209	38654
schwarz black	25257	30176	21424	37742
orange orange	26877	30181	27013	38656
weiß white	25924	30179	28547	38657
gelb yellow	25383	30173	26622	31909
grau grey	33970	30178	30540	38658
violett violet	38304	30180	38305	38655

E 3/3-4
2014

spohn+burkhardt
Elektrotechnische Fabrik Blaubeuren

Mauergasse 5
89143 BLAUBEUREN
GERMANY

Tel. +49 7344 171-0
Fax +49 7344 171-99

info@spobu.de
www.spobu.de

Ersatzteile Griff UGD
Spare parts handle

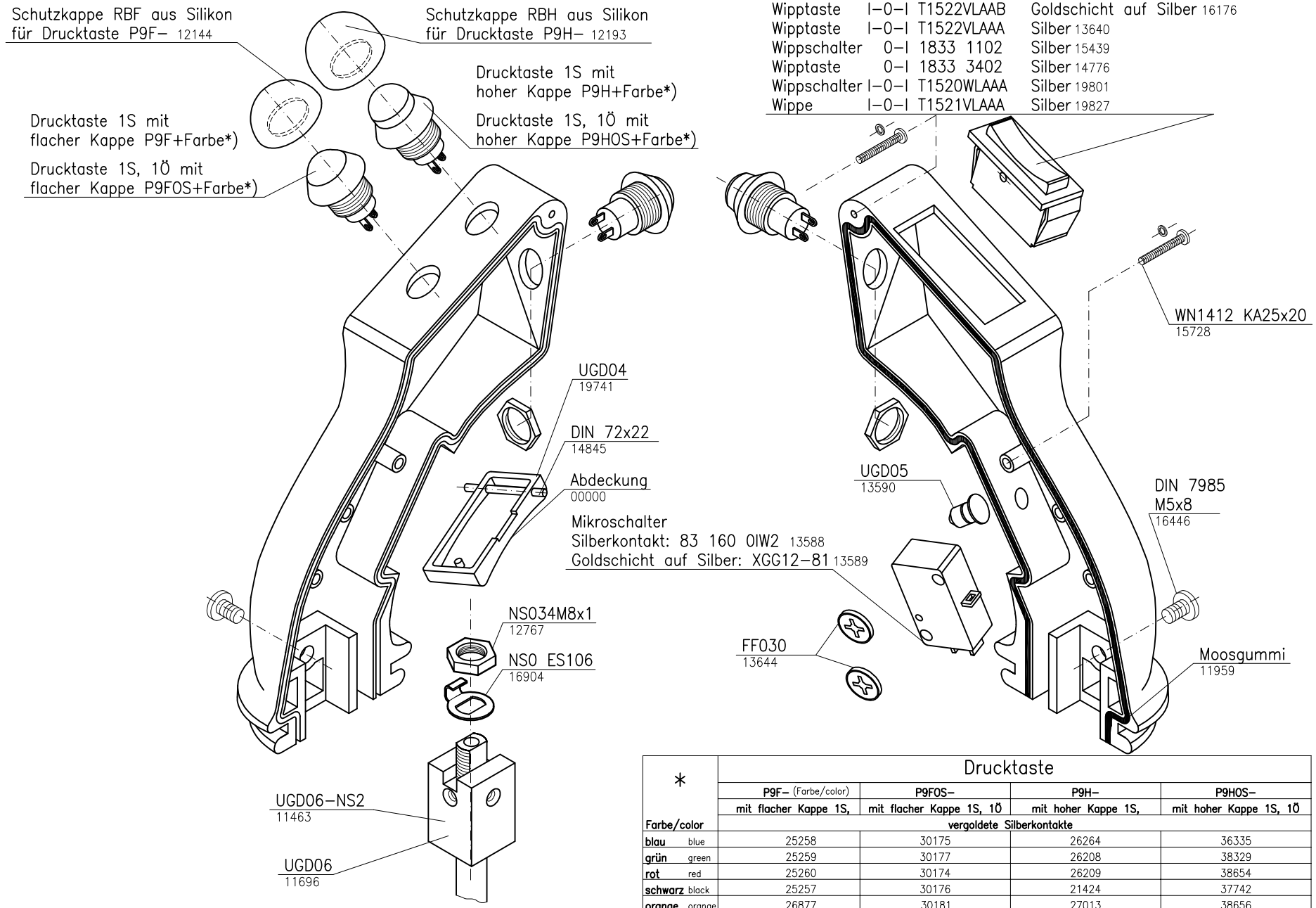

*	Drucktaste			
	P9F– (Farbe/color)	P9FOS–	P9H–	P9HOS–
	mit flacher Kappe 1S,	mit flacher Kappe 1S, 1Ö	mit hoher Kappe 1S,	mit hoher Kappe 1S, 1Ö
Farbe/color	vergoldete Silberkontakte			
blau blue	25258	30175	26264	36335
grün green	25259	30177	26208	38329
rot red	25260	30174	26209	38654
schwarz black	25257	30176	21424	37742
orange orange	26877	30181	27013	38656
weiß white	25924	30179	28547	38657
gelb yellow	25383	30173	26622	31909
grau grey	33970	30178	30540	38658
violett violet	38304	30180	38305	38655

E 3/3-5
2014

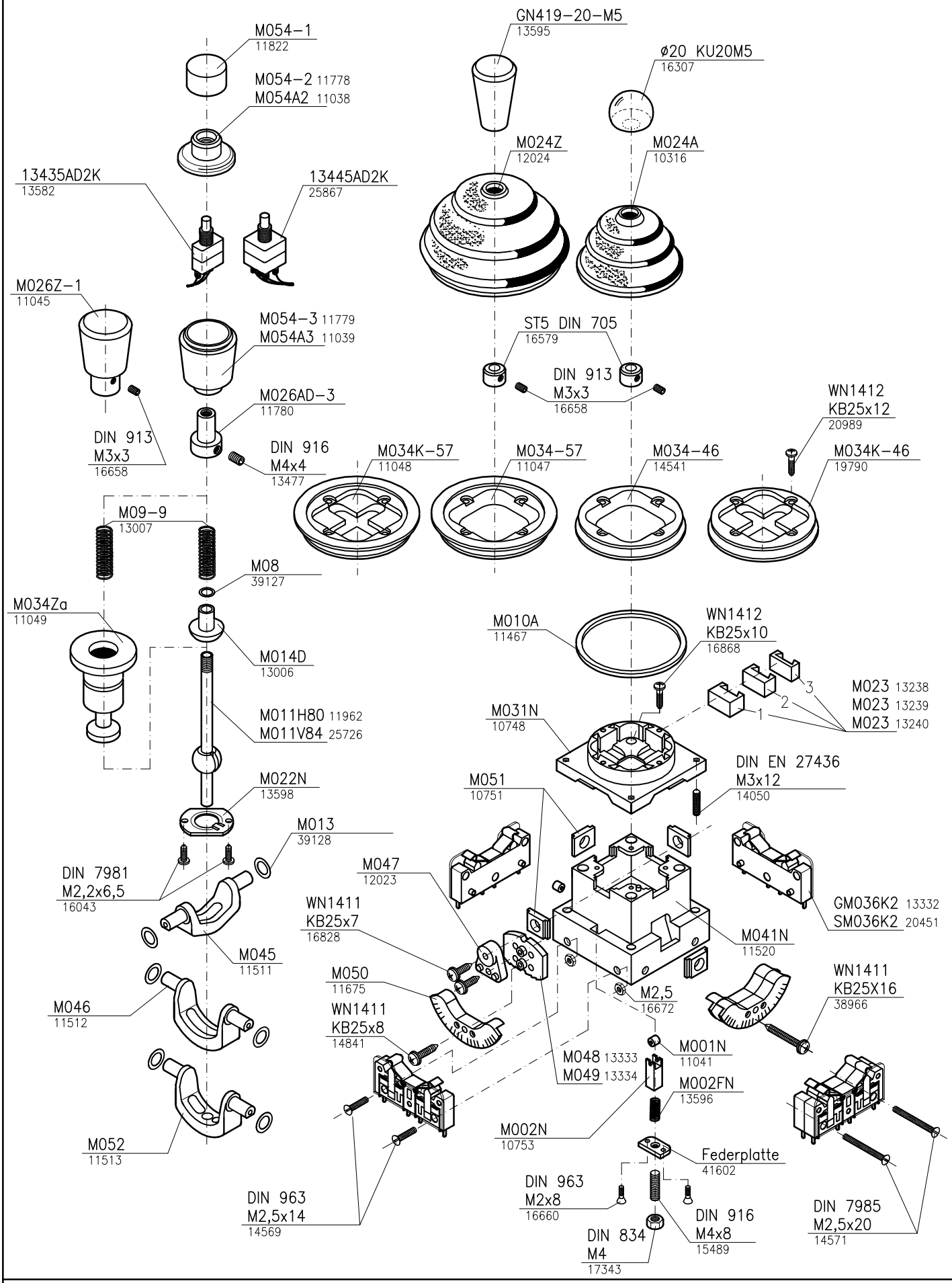

Spohn+Burkhardt
Elektrotechnische Fabrik Blaubeuren

Mauergasse 5
89143 BLAUBEUREN
GERMANY

Tel. +49 7344 171-0 info@spobu.de
Fax +49 7344 171-99 www.spobu.de

Typ M057–1 13773

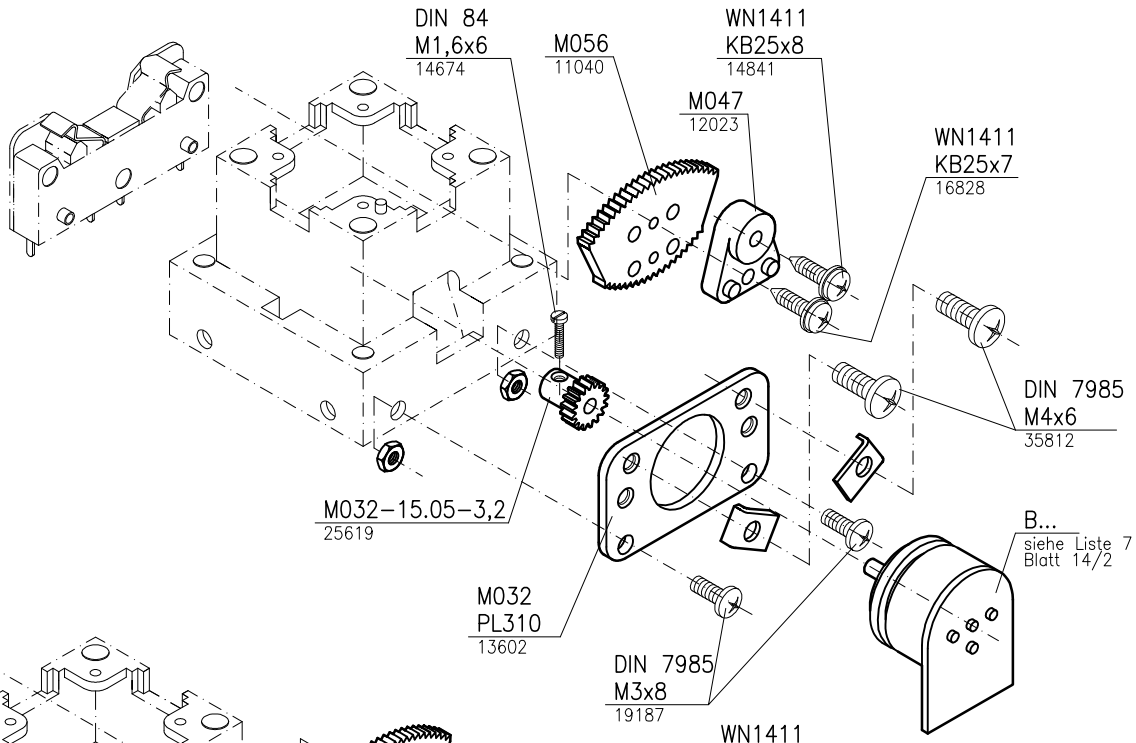

Typ M057–2 13774

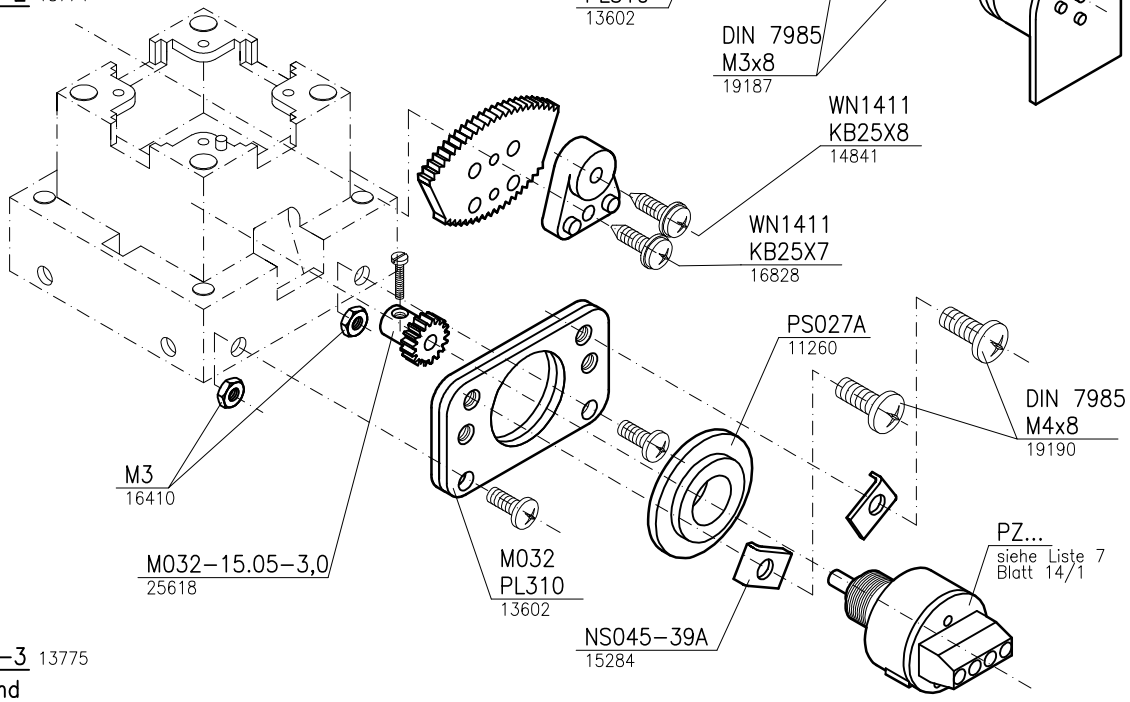

Typ M057–3 13775
Innenliegend

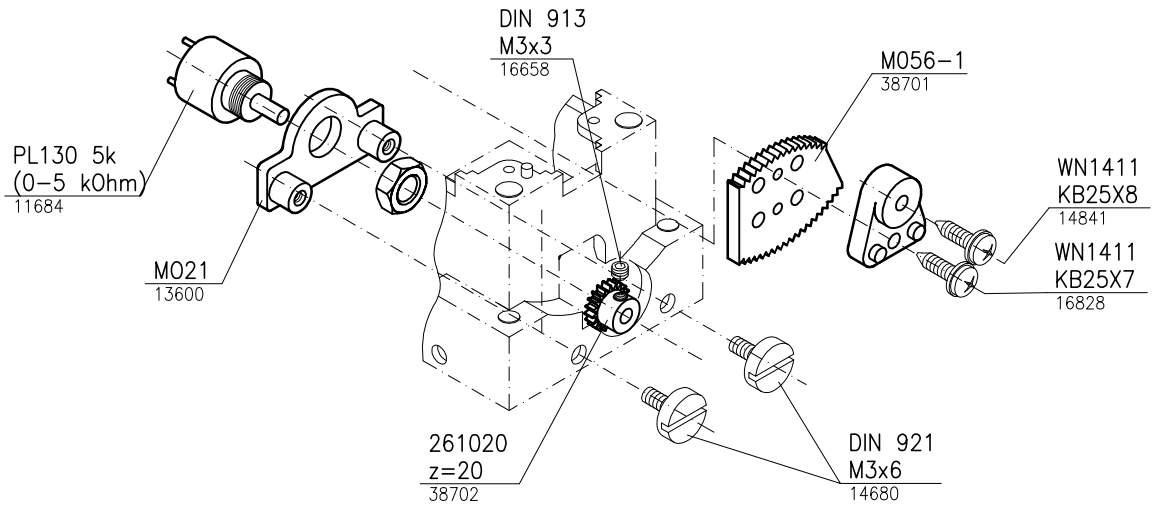

Spohn+Burkhardt
Elektrotechnische Fabrik Blaubeuren

Mauergasse 5
89143 BLAUBEUREN
GERMANY

Tel. +49 7344 171-0 info@spobu.de
Fax +49 7344 171-99 www.spobu.de

Ersatzteile Schalter ST0
Spare parts controller

E 5/2
2014

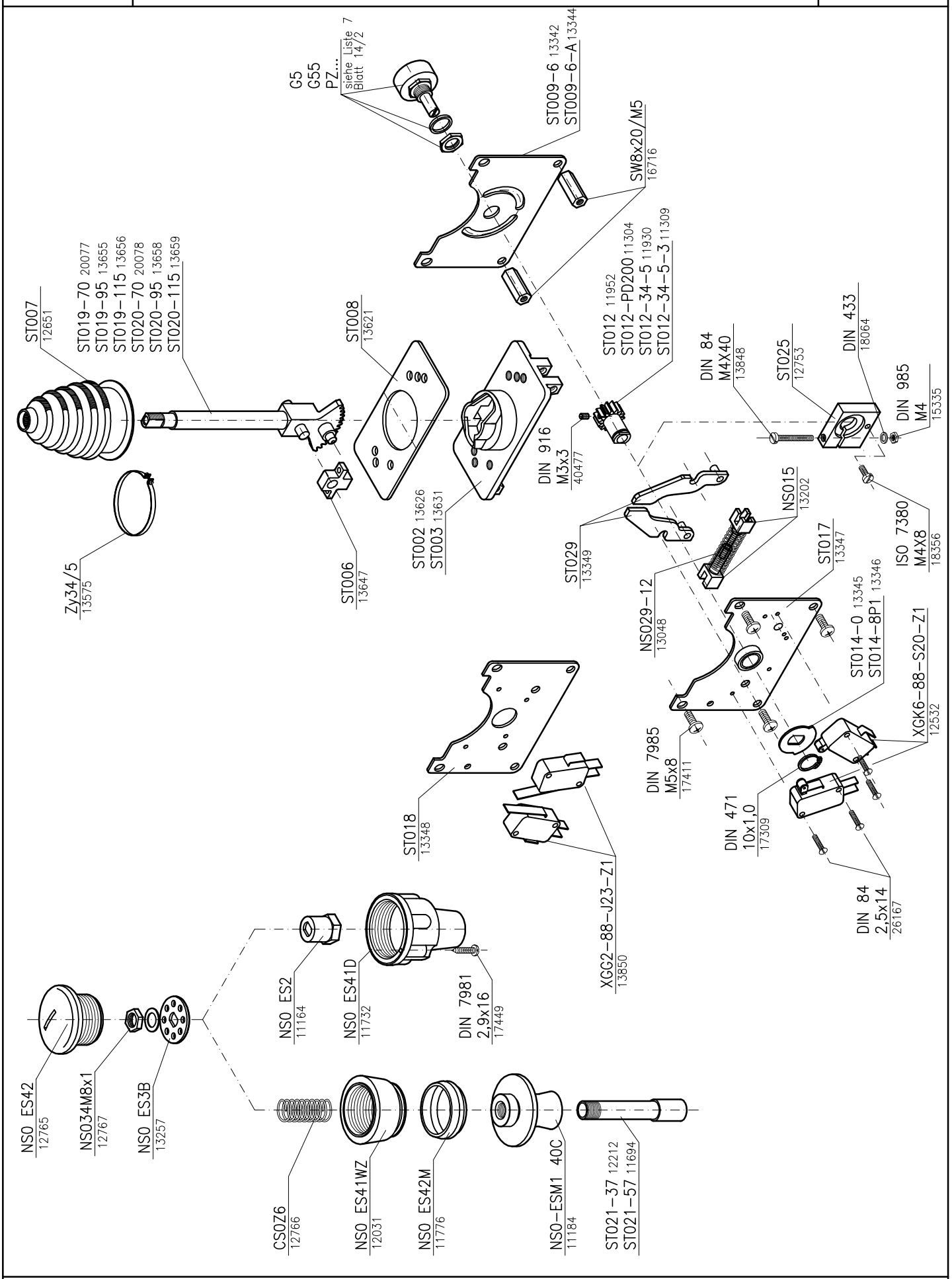

Spohn+Burkhardt
Elektrotechnische Fabrik Blaubeuren

Mauergasse 5
89143 BLAUBEUREN
GERMANY

Tel. +49 7344 171-0 info@spobu.de
Fax +49 7344 171-99 www.spobu.de

Kupplung für
Potentiometer B...

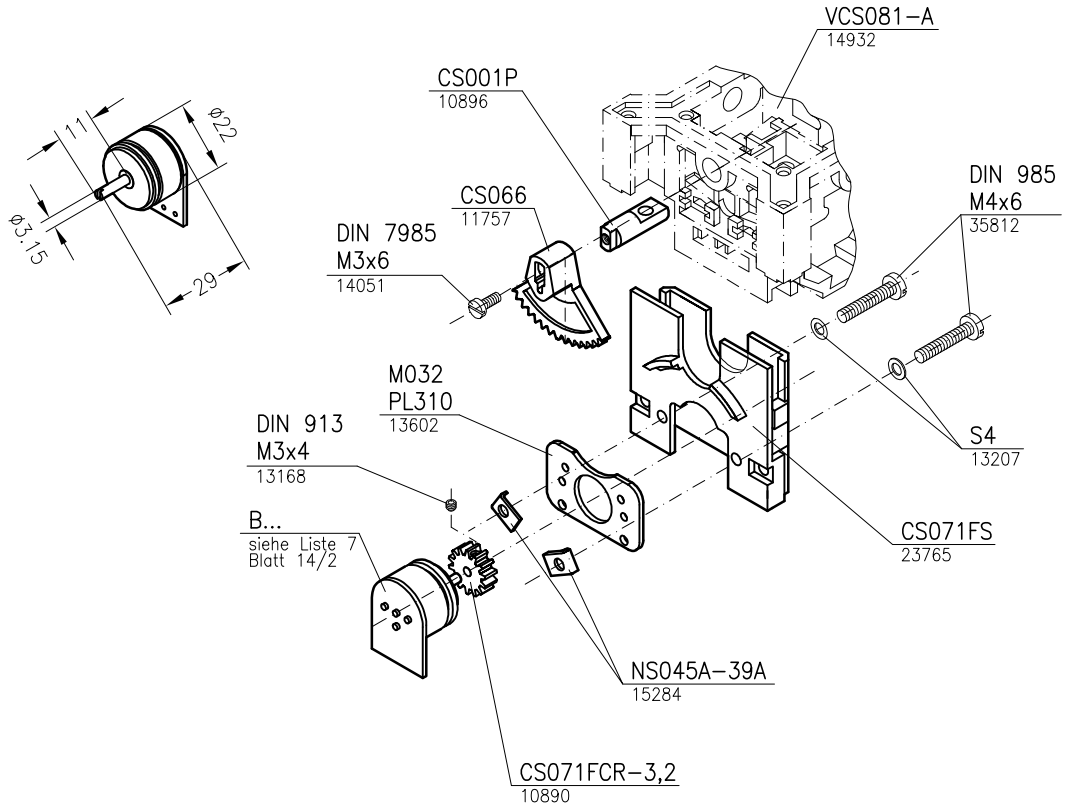

Kupplung für
Potentiometer PQ...

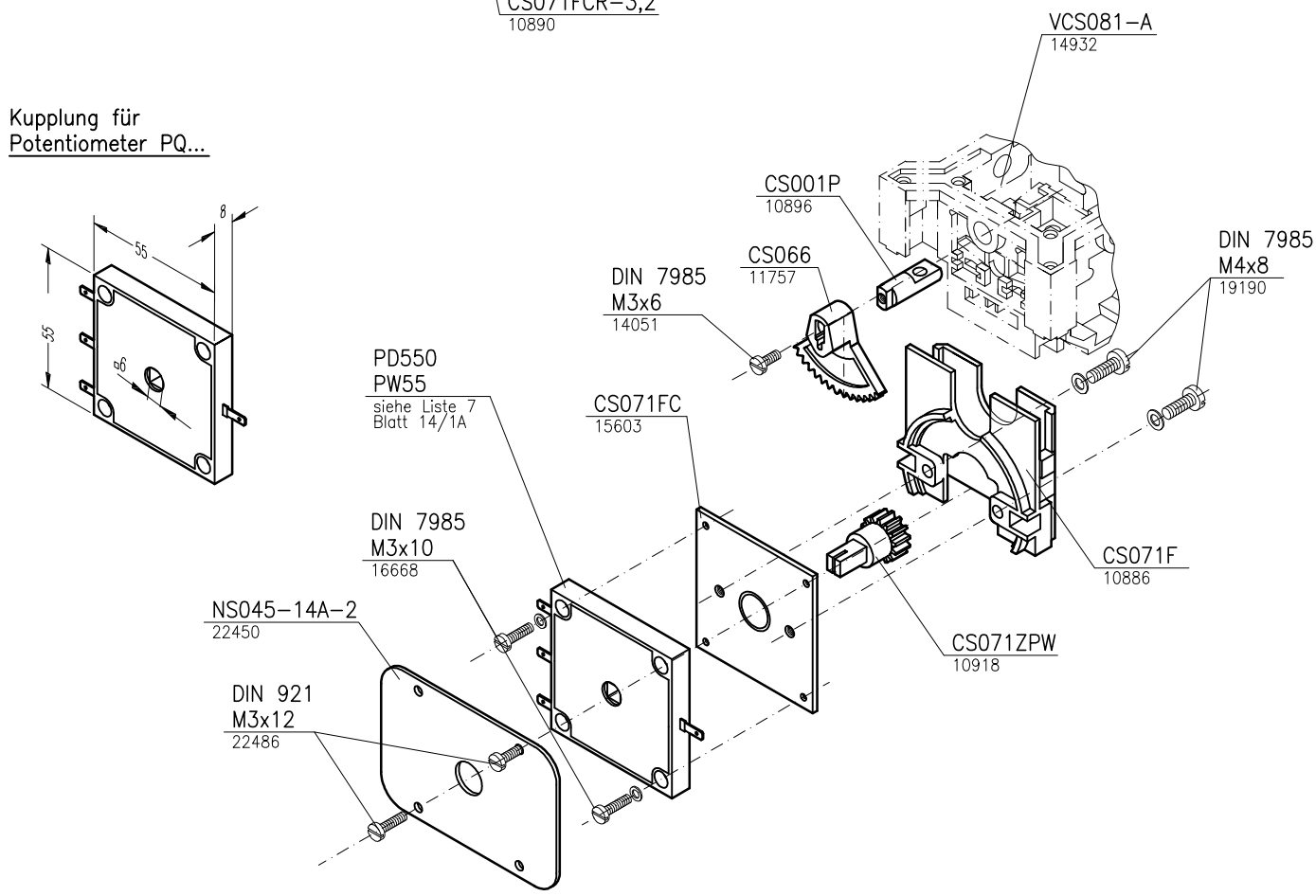

Spohn+Burkhardt
Elektrotechnische Fabrik Blaubeuren

Mauergasse 5
89143 BLAUBEUREN
GERMANY

Tel. +49 7344 171-0 info@spobu.de
Fax +49 7344 171-99 www.spobu.de

Meisterschalter/master controller CS0, VCS0

Kupplungsteile für Potentiometer: PD200, DP60, Geber: OGF
Parts for potentiometer coupling: PD200, DP60, encoder coupling: OGF

E 7/1-2
2014

Kupplung für Potentiometer PD200

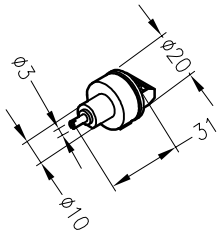

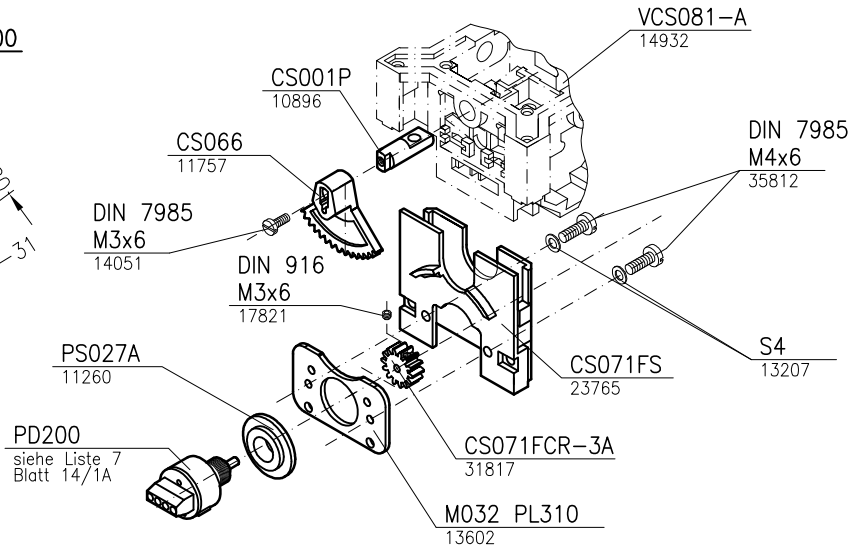

Kupplung für Potentiometer DP60

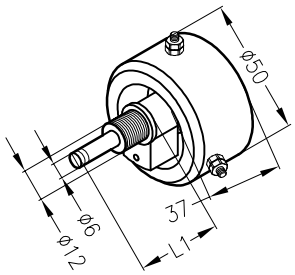

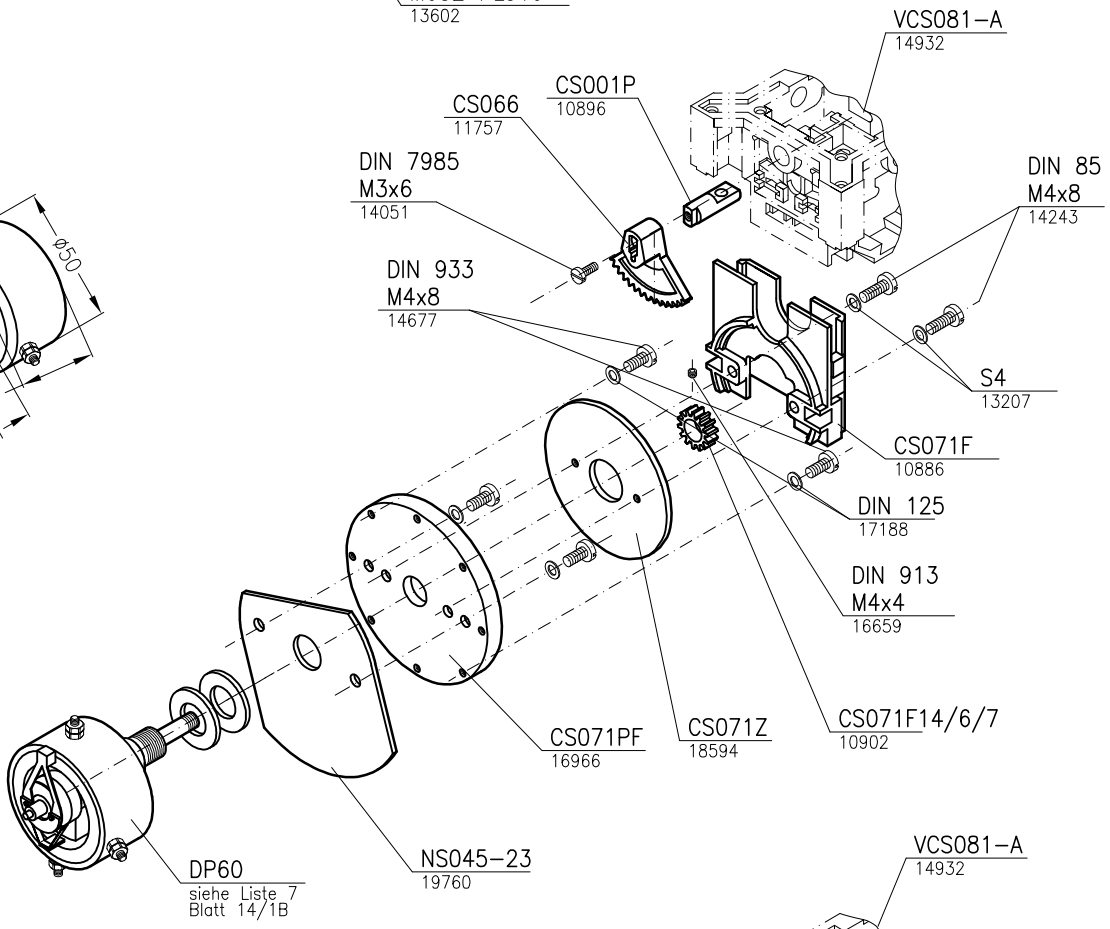

Kupplung für Absolutwertgeber OGF...

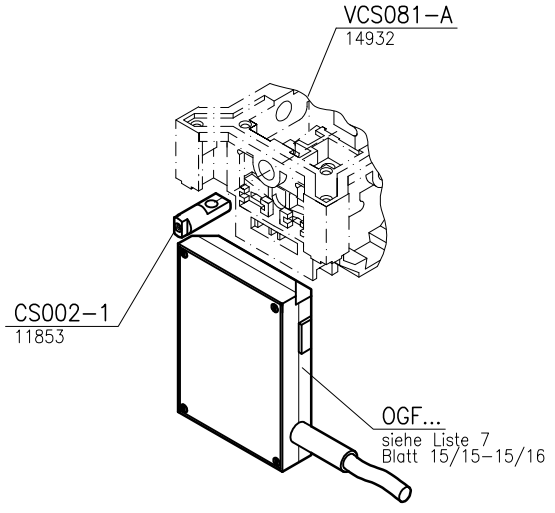

Spohn+Burkhardt
Elektrotechnische Fabrik Blaubeuren

Mauergasse 5
89143 BLAUBEUREN
GERMANY

Tel. +49 7344 171-0 info@spobu.de
Fax +49 7344 171-99 www.spobu.de

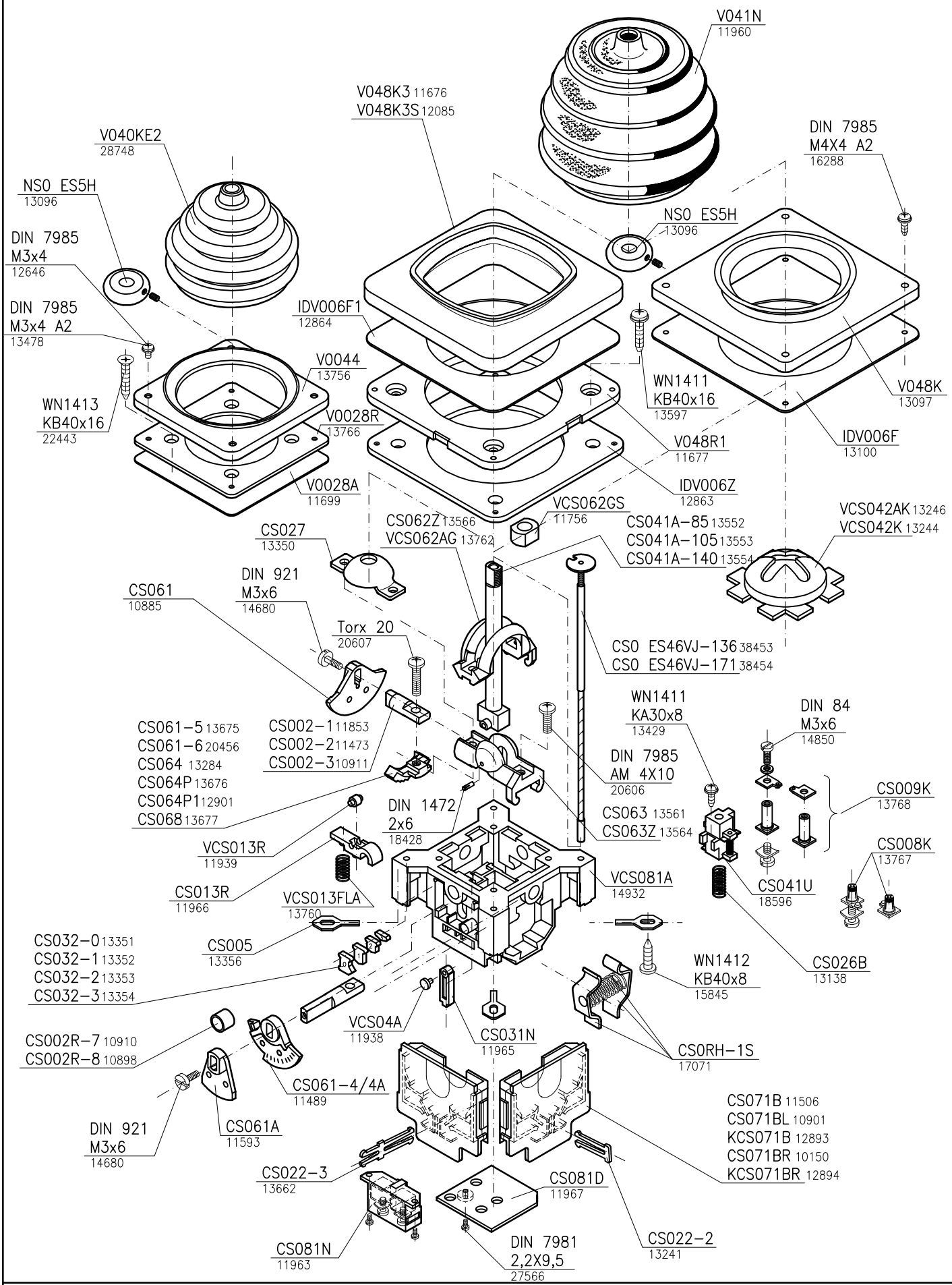

Spohn+Burkhardt
Elektrotechnische Fabrik Blaubeuren

Mauergasse 5
89143 BLAUBEUREN
GERMANY

Tel. +49 7344 171-0 info@spobu.de
Fax +49 7344 171-99 www.spobu.de

Rosette für VCS0 Schalter
Escutcheon plate for VCS0 controller

E 7/2A
2014

VCS0 72

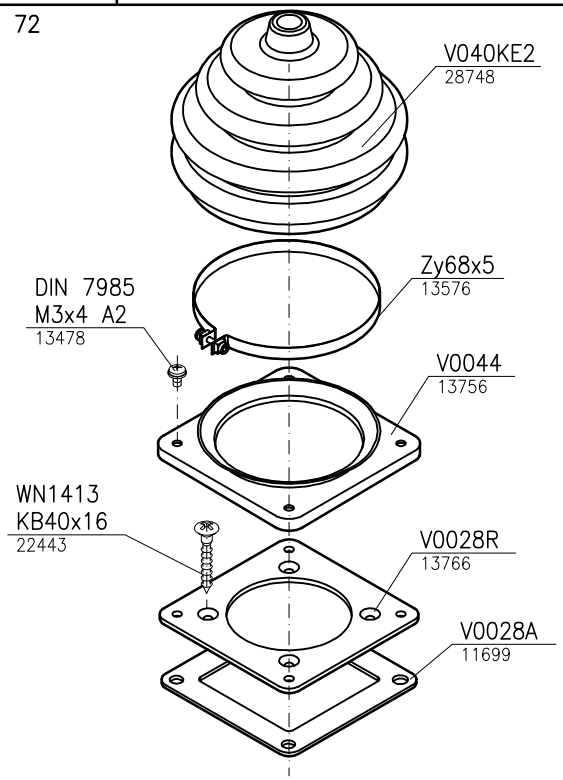

VCS0 S0

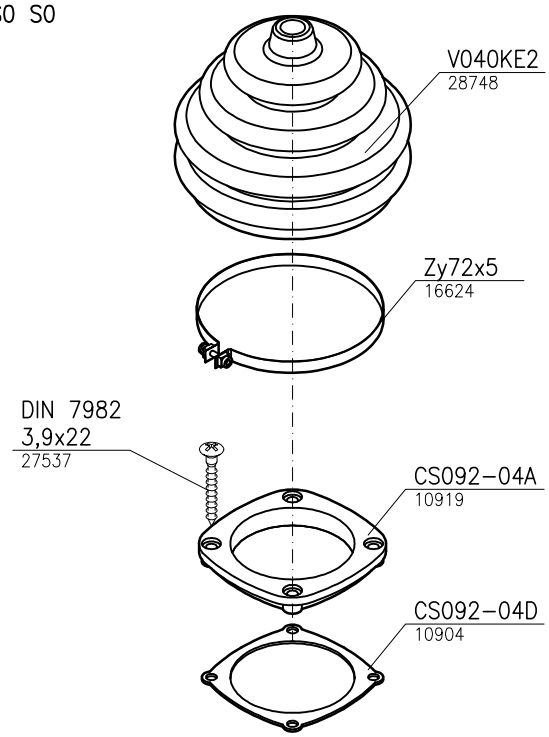

VCS096 mit Aluminium Rosette
with aluminium escutcheon plate

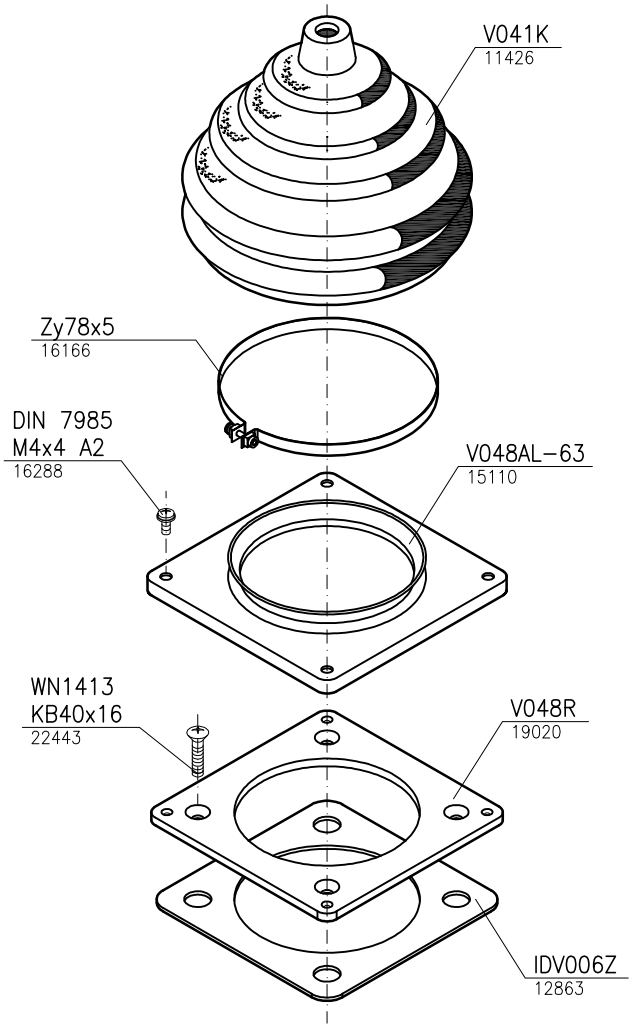

VCS0 S

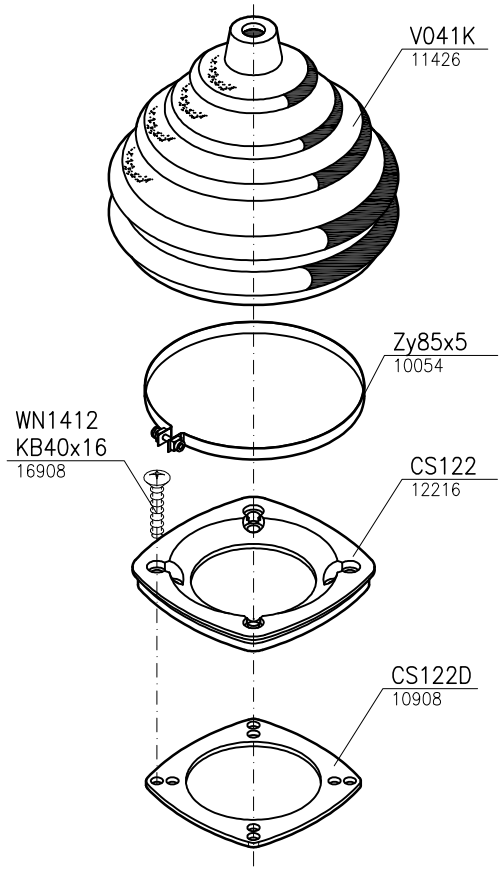

Spohn+Burkhardt
Elektrotechnische Fabrik Blaubeuren

Mauergasse 5
89143 BLAUBEUREN
GERMANY

Tel. +49 7344 171-0 info@spobu.de
Fax +49 7344 171-99 www.spobu.de

Rosette für VCS0 Schalter
Escutcheon plate for VCS0 controller

E 7/2B
2014

VCS0 96 mit schwarzer Kunststoffrosette
with black plastic escutcheon plate

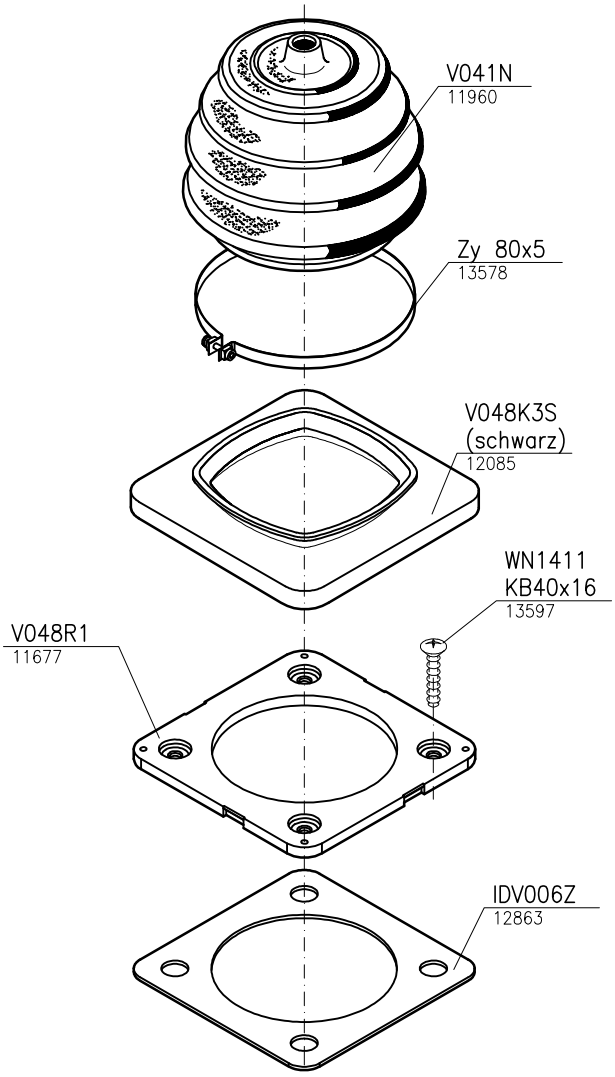

VCS0 96 mit transparenter Kunststoffrosette
with transparent plastic escutcheon plate

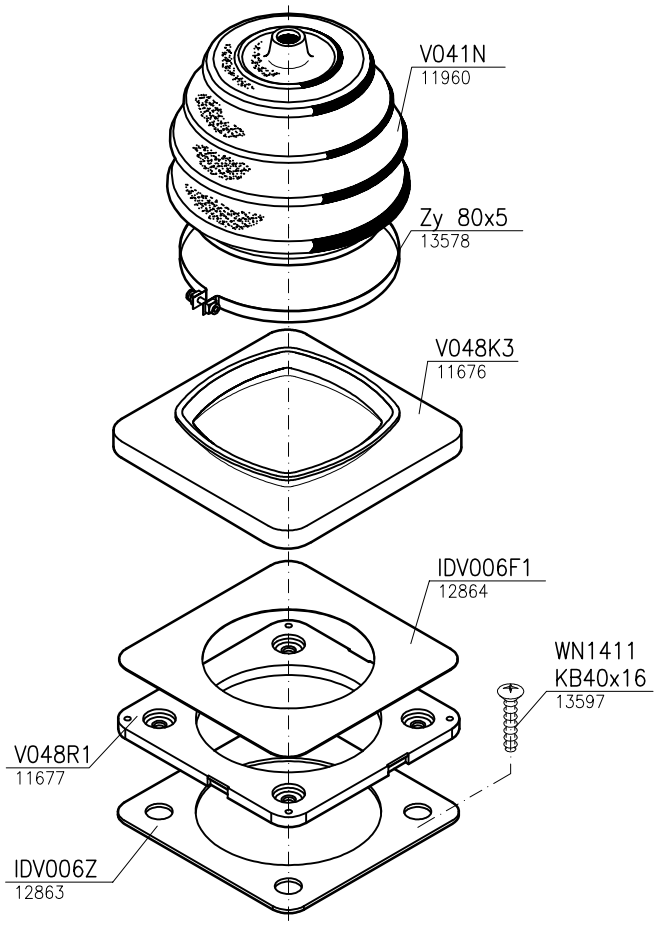

VCS0 S1

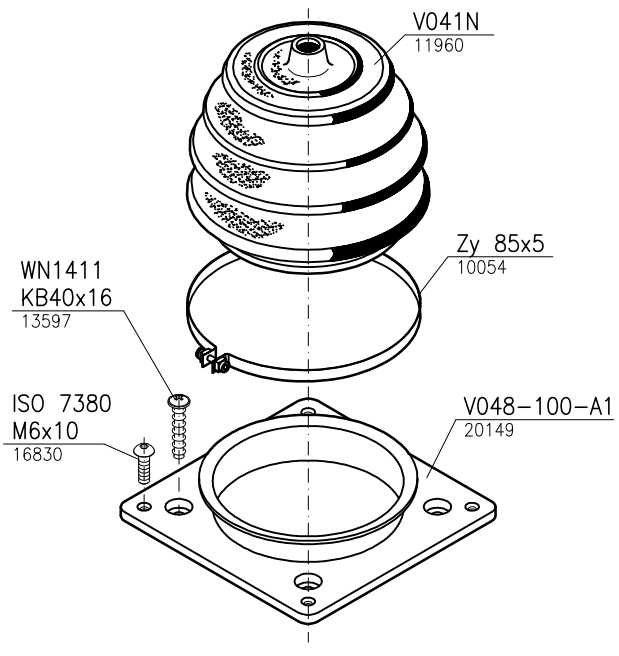

VCS0 96 mit durchsichtiger Kunststoffrosette geschraubt
with transparent, screwed plastic escutcheon plate

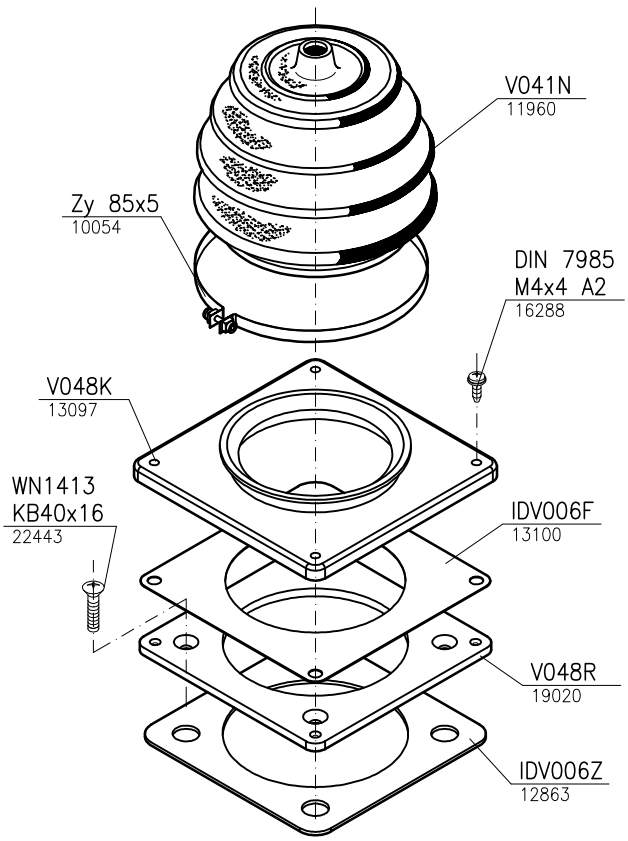

Spohn+Burkhardt
Elektrotechnische Fabrik Blaubeuren

Mauergasse 5
89143 BLAUBEUREN
GERMANY

Tel. +49 7344 171-0 info@spobu.de
Fax +49 7344 171-99 www.spobu.de

Rosette für NS0, VNS0, NNS0 Schalter
Escutcheon plate for NS0, VNS0, NNS0 controller

E 7/2C
2014

Mit Kunststoffrosette
With plastic escutcheon plate

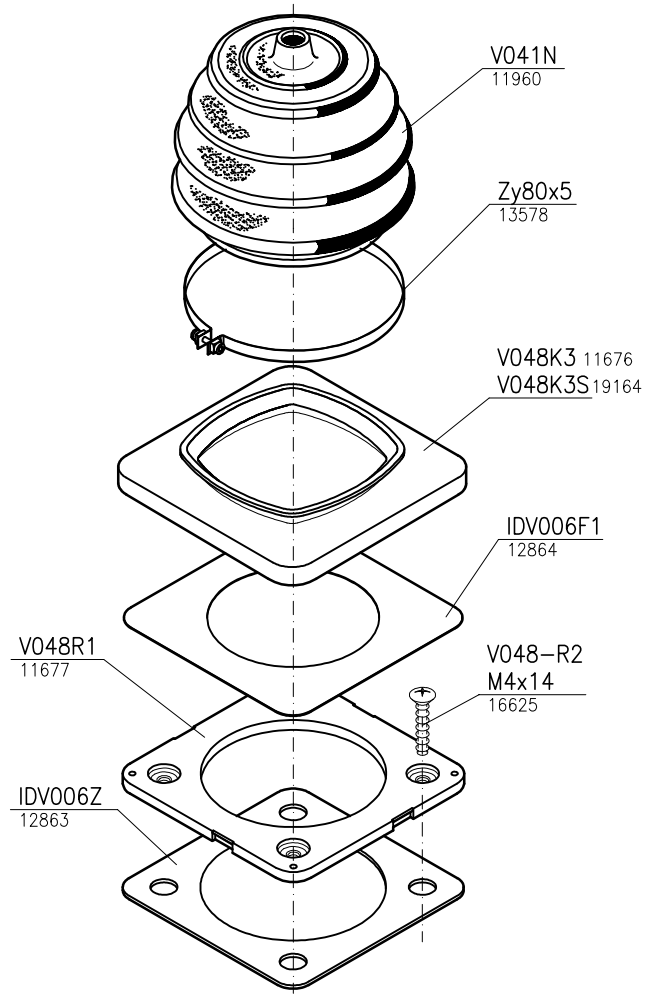

Mit Aluminium Rosette
With aluminium escutcheon plate

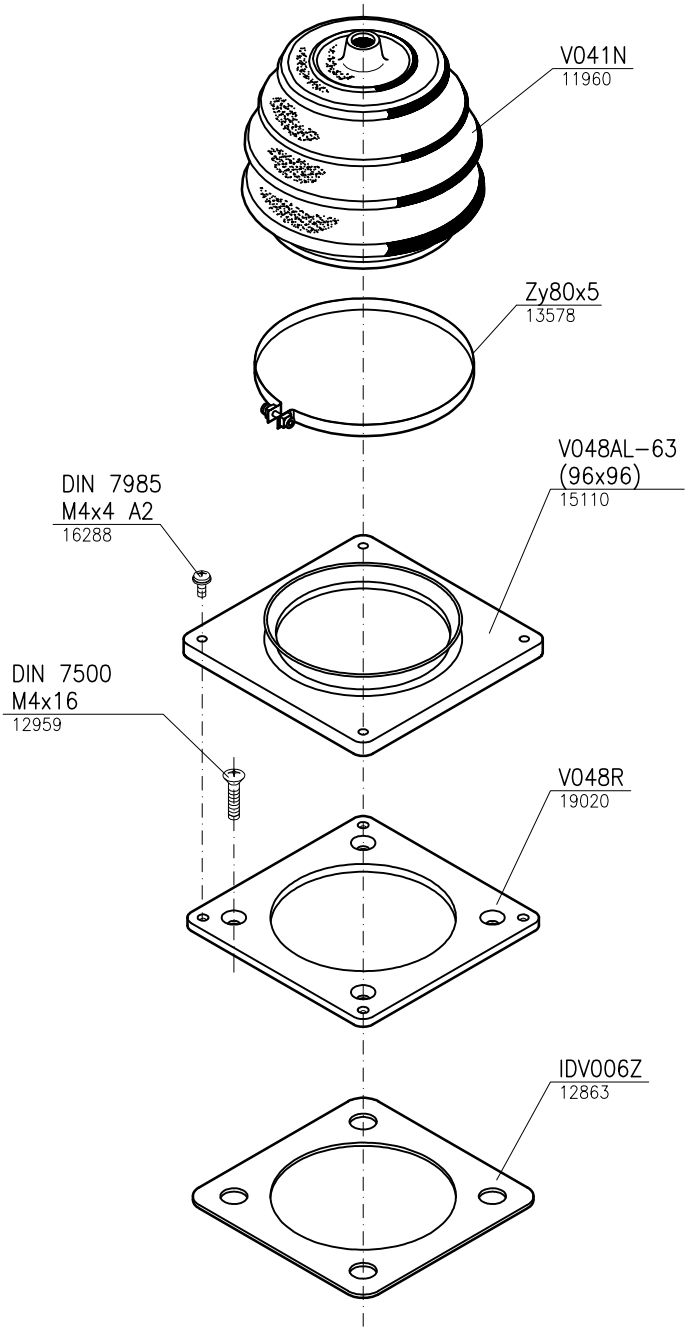

Zur Montage von unten
For below mounting

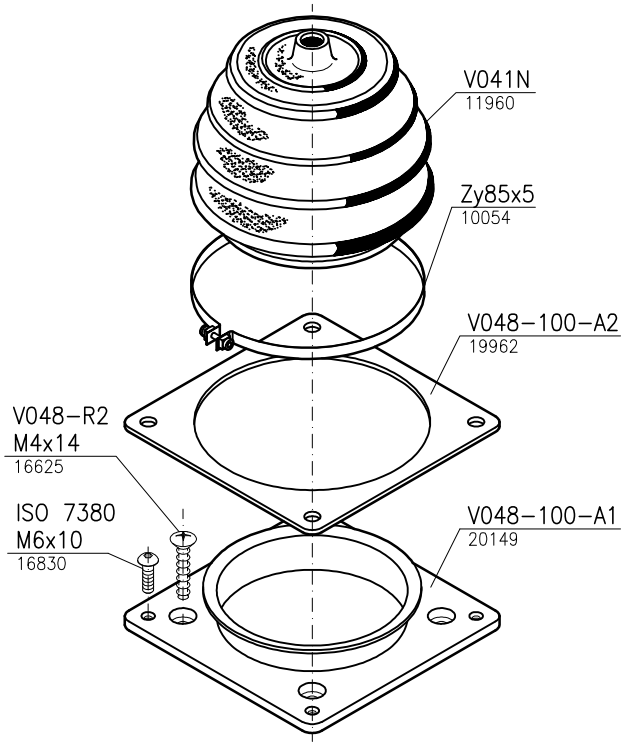

Spohn+Burkhardt
Elektrotechnische Fabrik Blaubeuren

Mauergasse 5
89143 BLAUBEUREN
GERMANY

Tel. +49 7344 171-0 info@spobu.de
Fax +49 7344 171-99 www.spobu.de

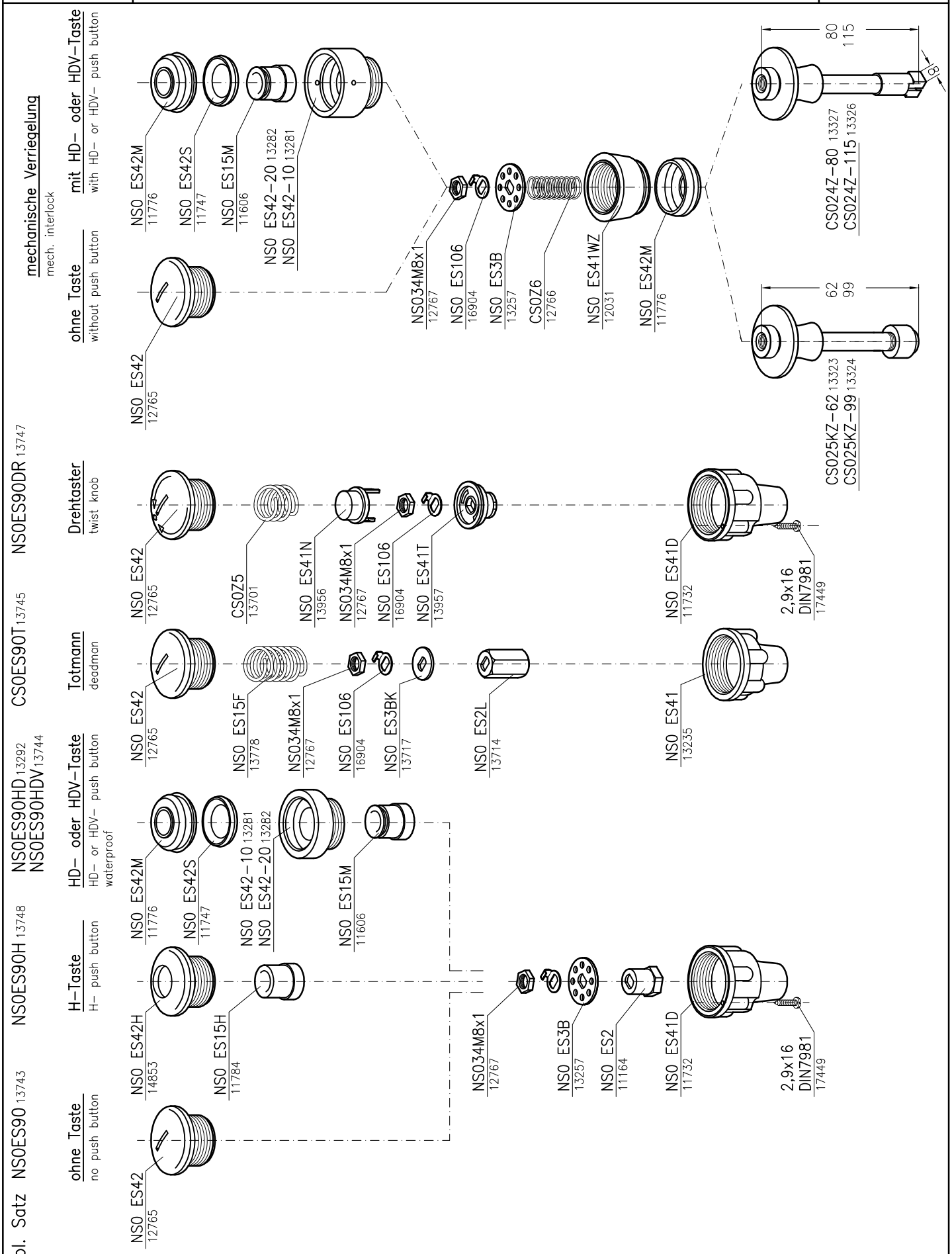

Spohn+Burkhardt
Elektrotechnische Fabrik Blaubeuren

Mauergasse 5
89143 BLAUBEUREN
GERMANY

Tel. +49 7344 171-0
Fax +49 7344 171-99

info@spobu.de
www.spobu.de

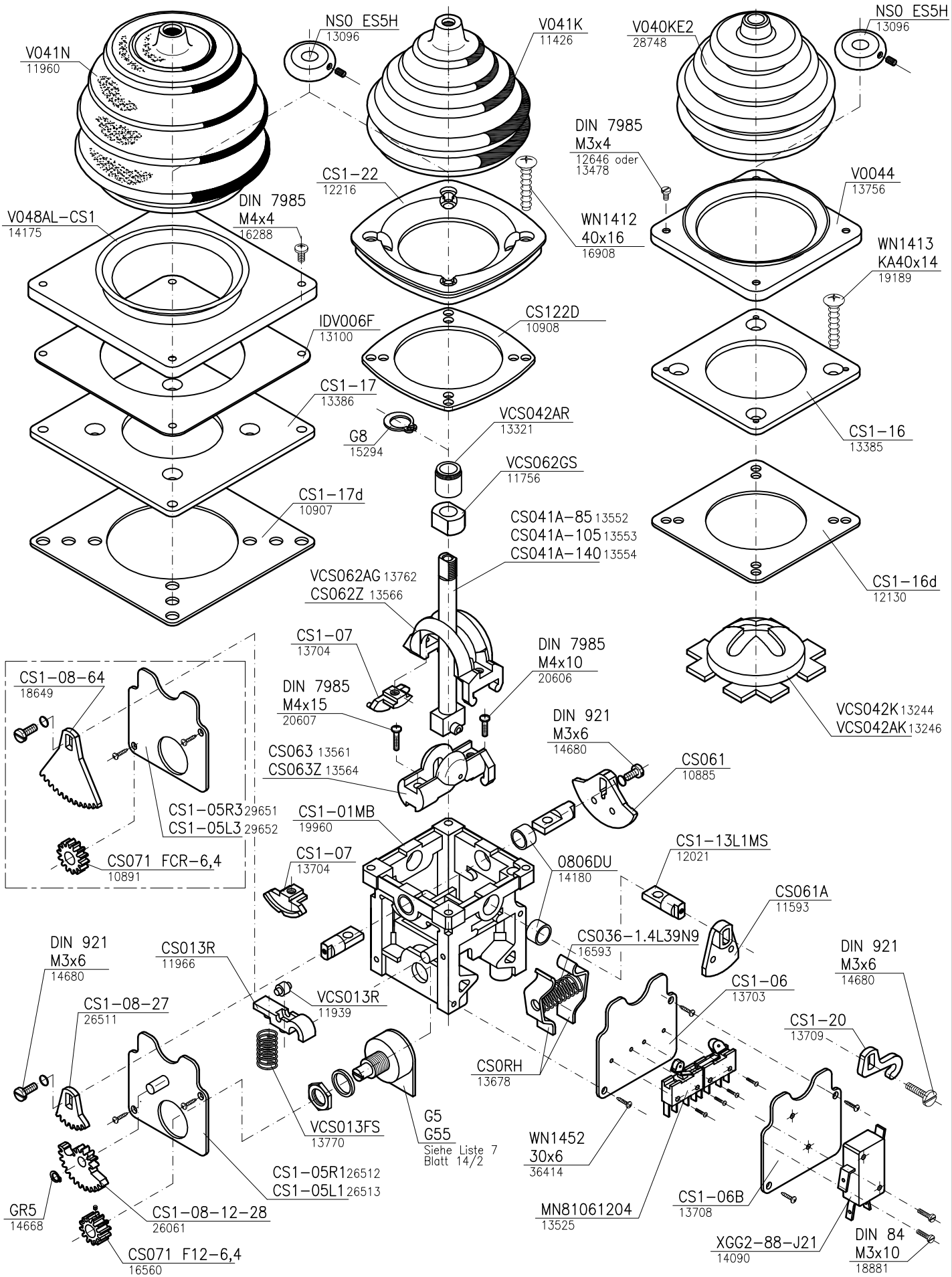

Spohn+Burkhardt
Elektrotechnische Fabrik Blaubeuren

Mauergasse 5
89143 BLAUBEUREN
GERMANY

Tel. +49 7344 171-0 info@spobu.de
Fax +49 7344 171-99 www.spobu.de

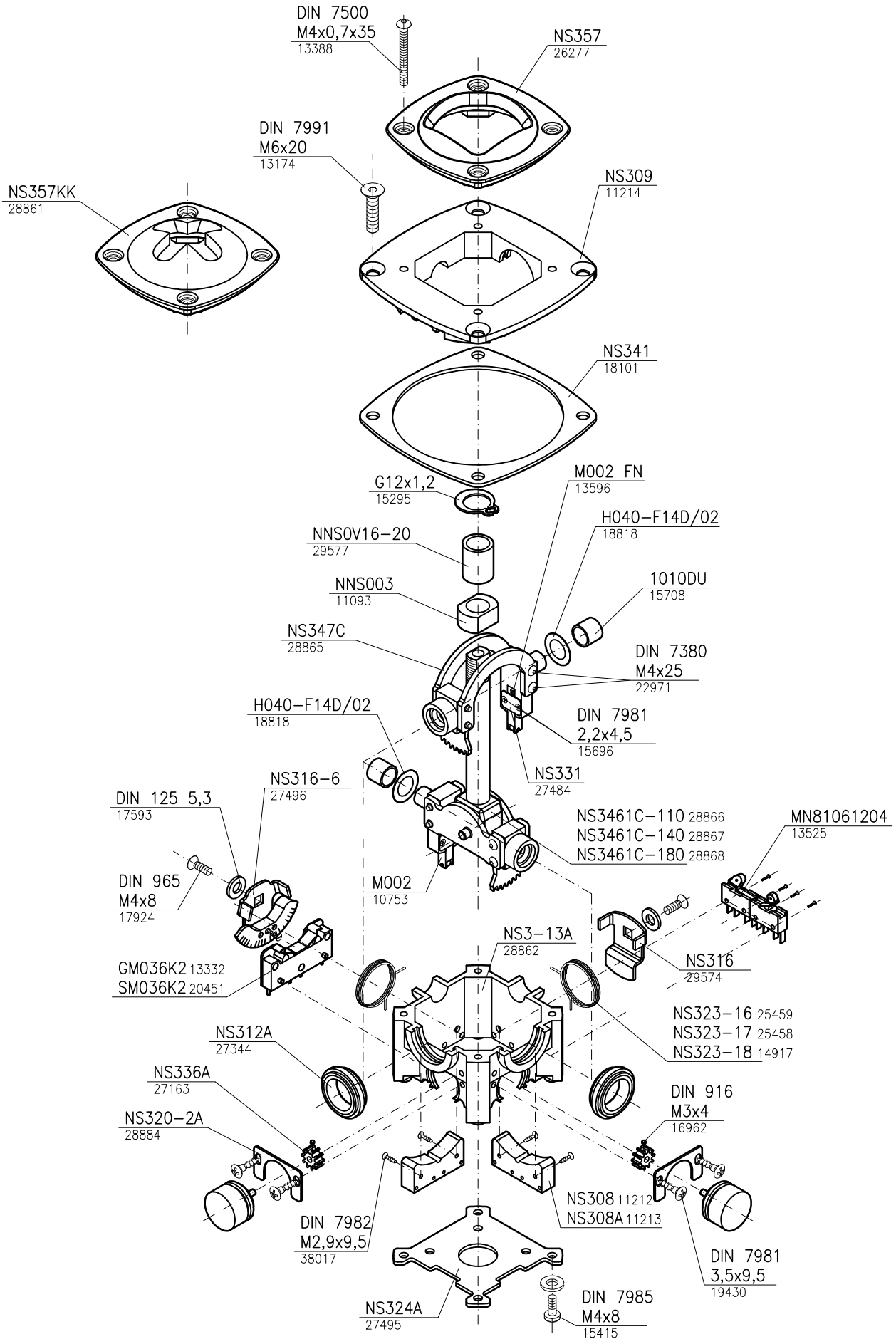

Spohn+Burkhardt
Elektrotechnische Fabrik Blaubeuren

Mauergasse 5
89143 BLAUBEUREN
GERMANY

Tel. +49 7344 171-0 info@spobu.de
Fax +49 7344 171-99 www.spobu.de

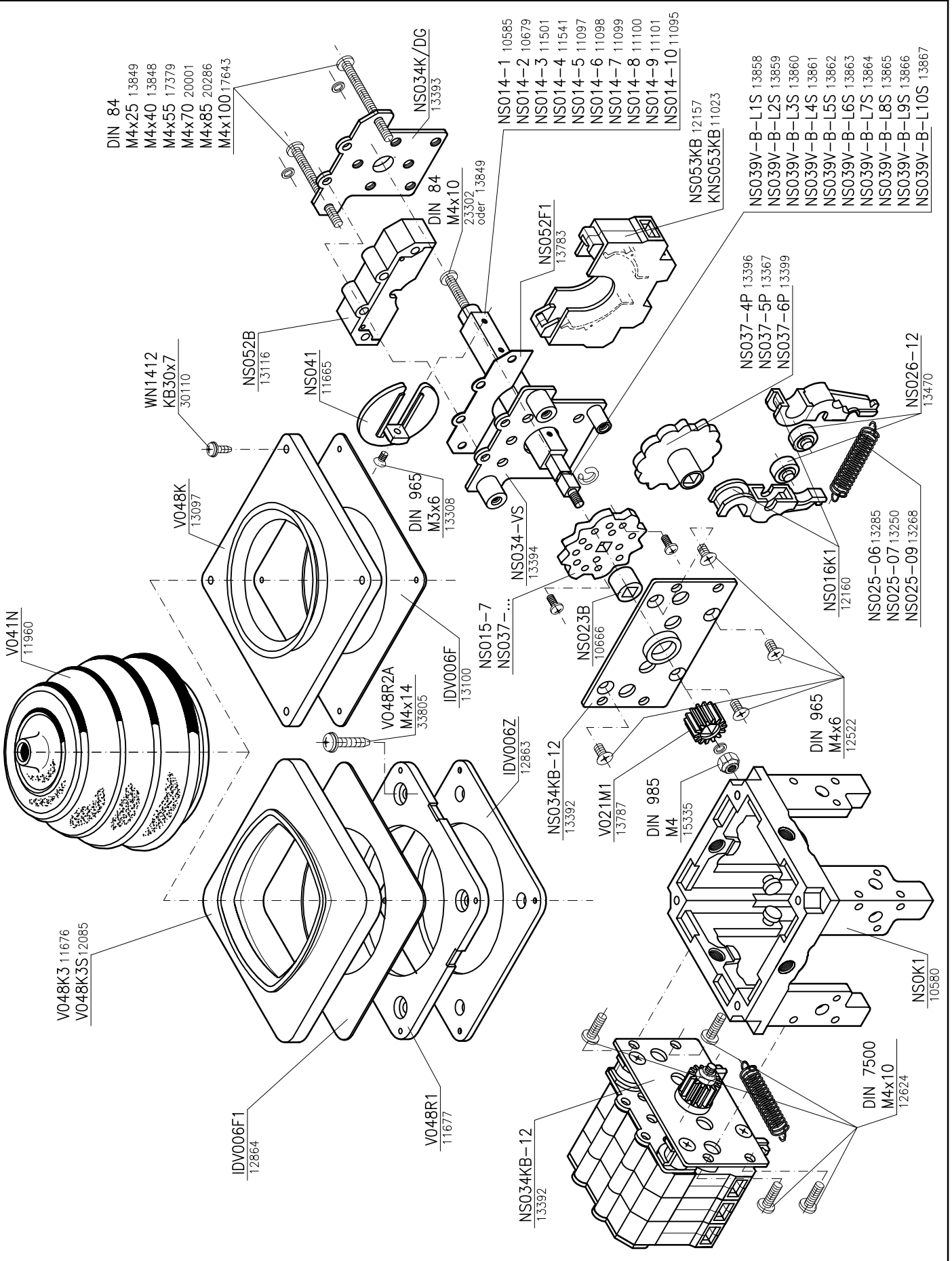

Spohn+Burkhardt
Elektrotechnische Fabrik Blaubeuren

Mauergasse 5
89143 BLAUBEUREN
GERMANY

Tel. +49 7344 171-0 info@spobu.de
Fax +49 7344 171-99 www.spobu.de

Kegelradantrieb NS0-SFAR

Spare parts controller

E 9/12
2014

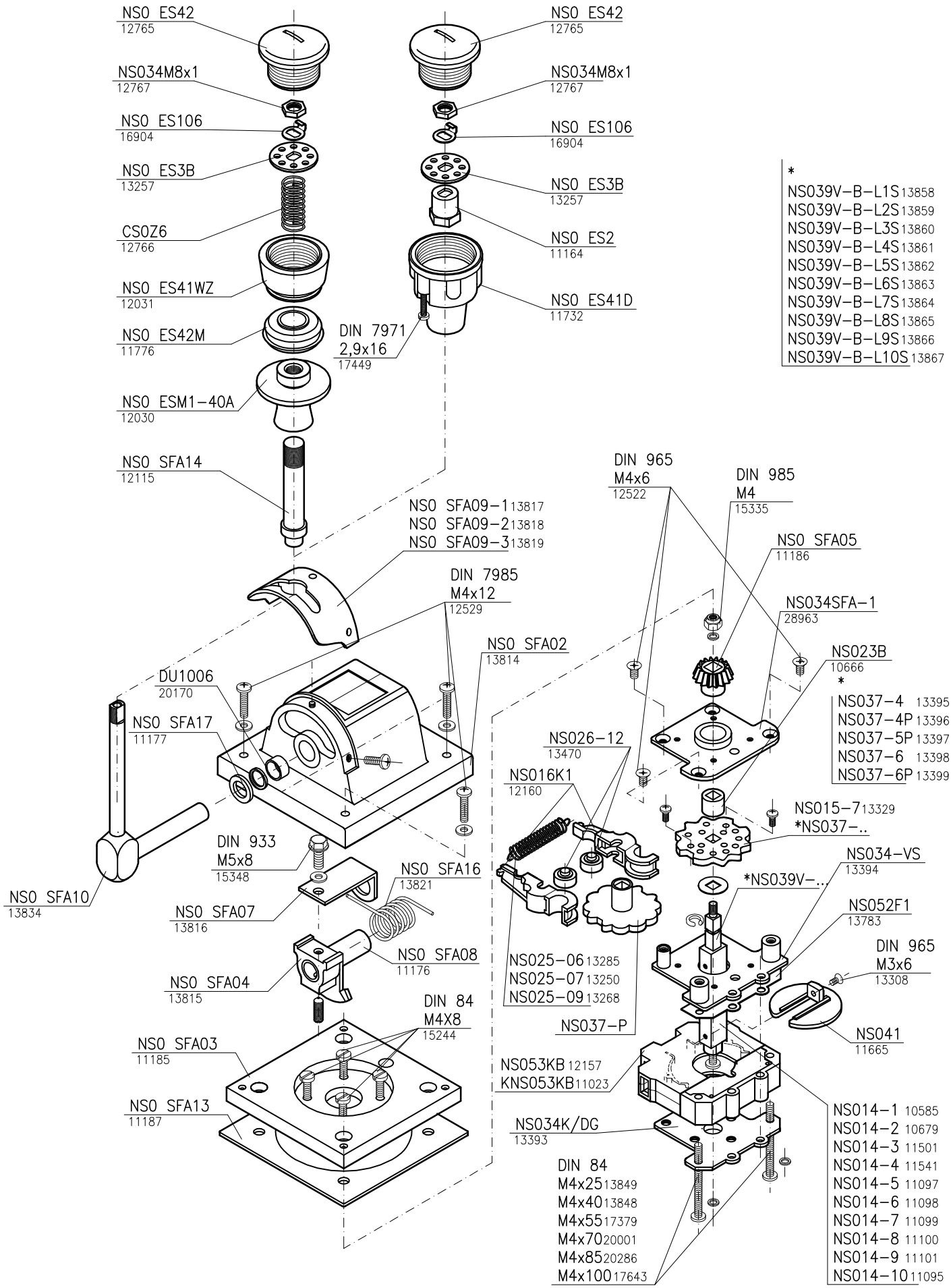

Spohn+Burkhardt
Elektrotechnische Fabrik Blaubeuren

Mauergasse 5
89143 BLAUBEUREN
GERMANY

Tel. +49 7344 171-0 info@spobu.de
Fax +49 7344 171-99 www.spobu.de

Ersatzteile Hebel VNS0–H, NS0–H, VNS0–V, NS0–V

Spare parts lever

E 9/2
2014

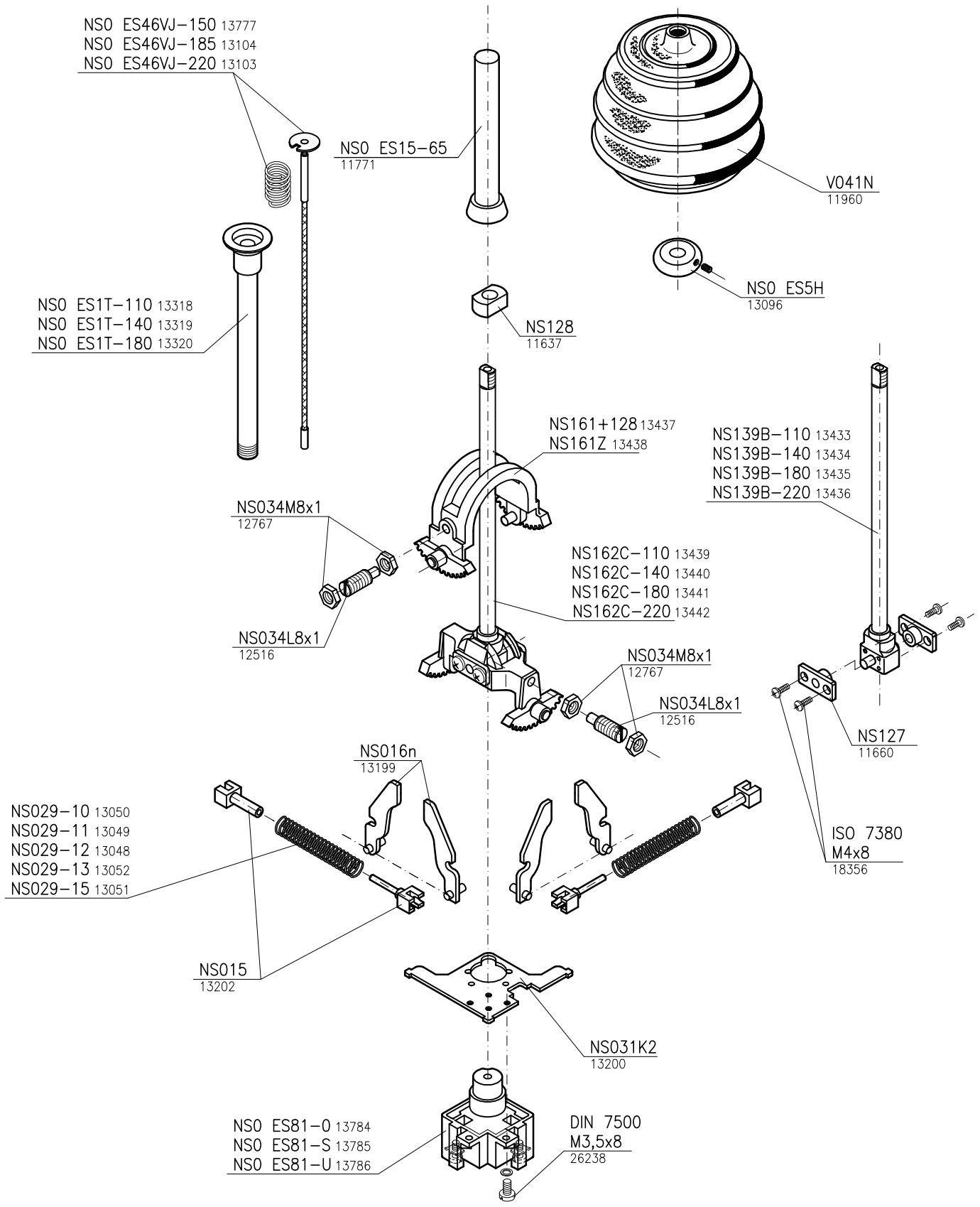

Spohn+Burkhardt
Elektrotechnische Fabrik Blaubeuren

Mauergasse 5
89143 BLAUBEUREN
GERMANY

Tel. +49 7344 171-0 info@spobu.de
Fax +49 7344 171-99 www.spobu.de

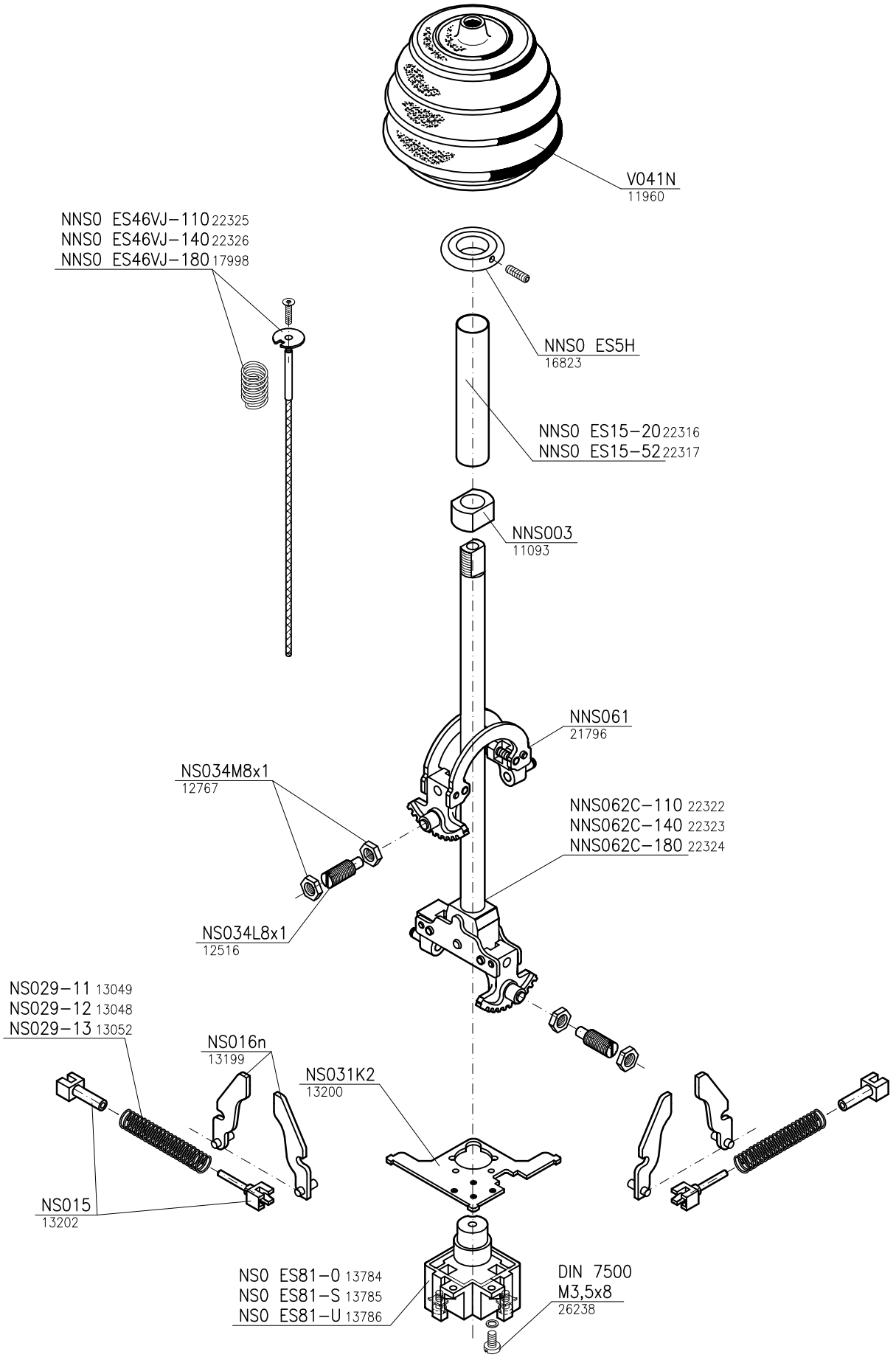

Spohn+Burkhardt
Elektrotechnische Fabrik Blaubeuren

Mauergasse 5
89143 BLAUBEUREN
GERMANY

Tel. +49 7344 171-0 info@spobu.de
Fax +49 7344 171-99 www.spobu.de

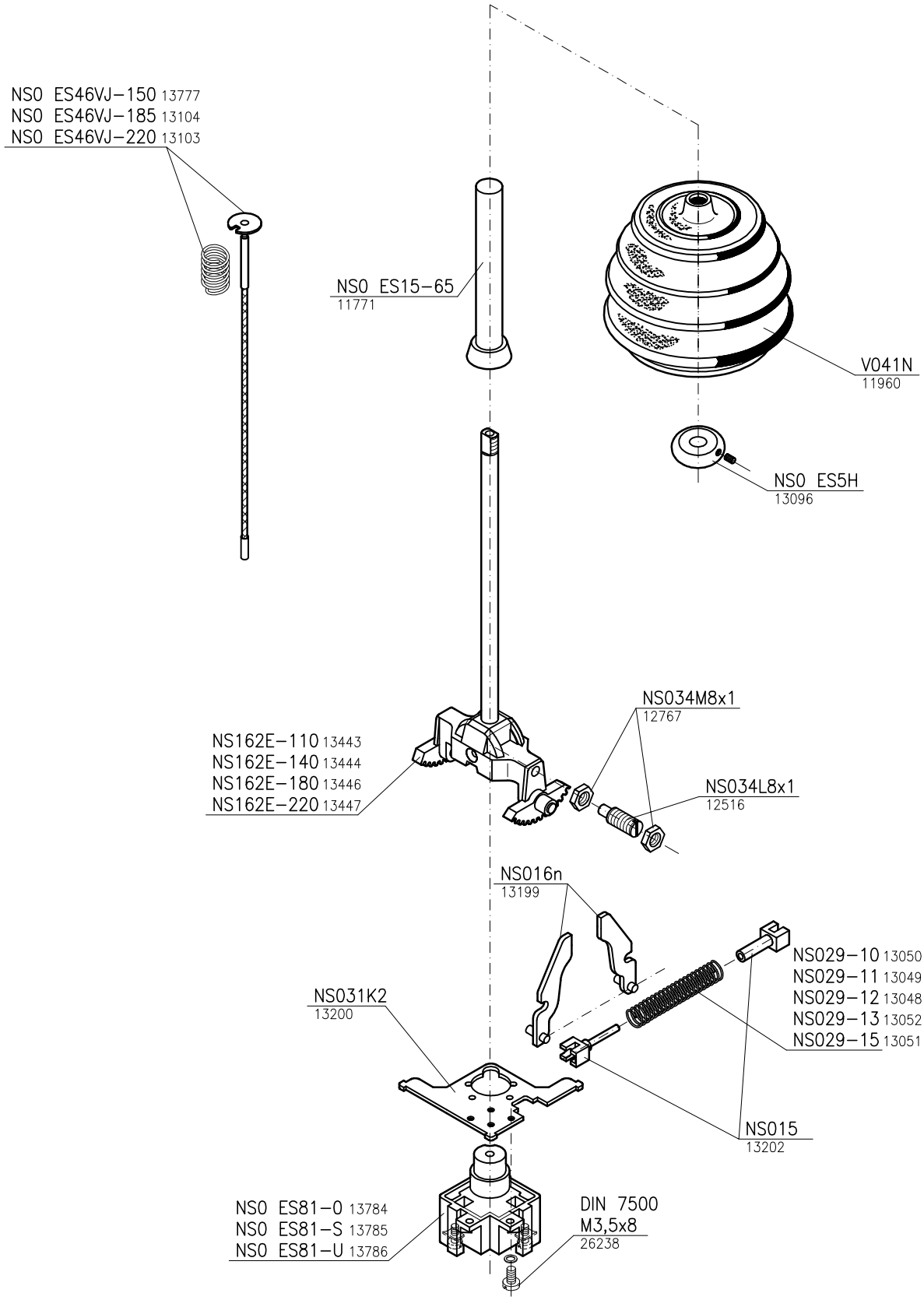

Spohn+Burkhardt
Elektrotechnische Fabrik Blaubeuren

Mauergasse 5
89143 BLAUBEUREN
GERMANY

Tel. +49 7344 171-0 info@spobu.de
Fax +49 7344 171-99 www.spobu.de

Ersatzteile Hebel NNS0–E, NNS0–G
Spare parts lever

E 9/3-1N
2014

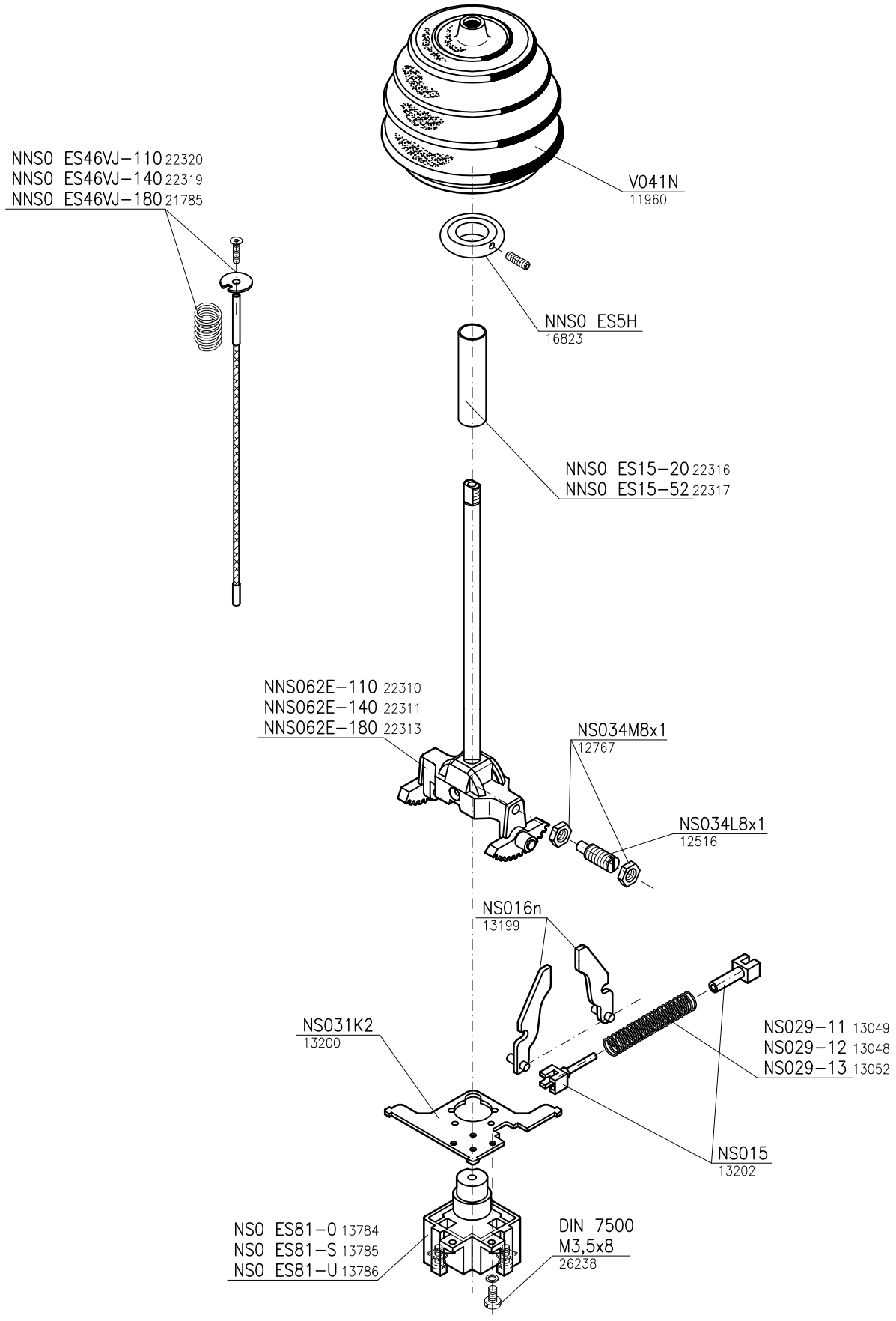

Spohn+Burkhardt
Elektrotechnische Fabrik Blaubeuren

Mauergasse 5
89143 BLAUBEUREN
GERMANY

Tel. +49 7344 171-0 info@spobu.de
Fax +49 7344 171-99 www.spobu.de

Ersatzteile Hebel VNS0–EA, NS0–EA
Spare parts lever

E 9/4
2014

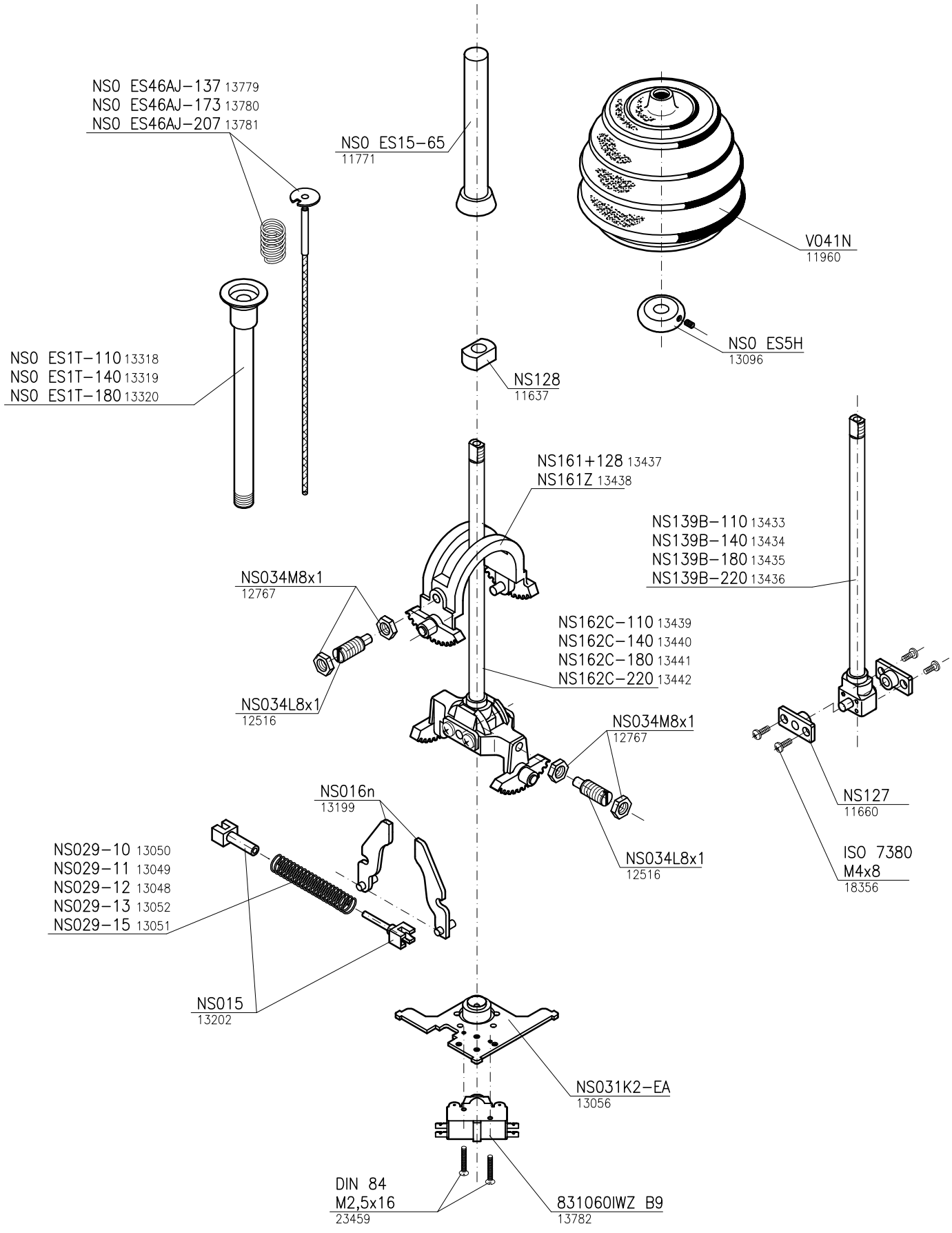

Spohn+Burkhardt
Elektrotechnische Fabrik Blaubeuren

Mauergasse 5
89143 BLAUBEUREN
GERMANY

Tel. +49 7344 171-0 info@spobu.de
Fax +49 7344 171-99 www.spobu.de

Ersatzteile Hebel NNS0-EA
Spare parts lever

E 9/4N
2014

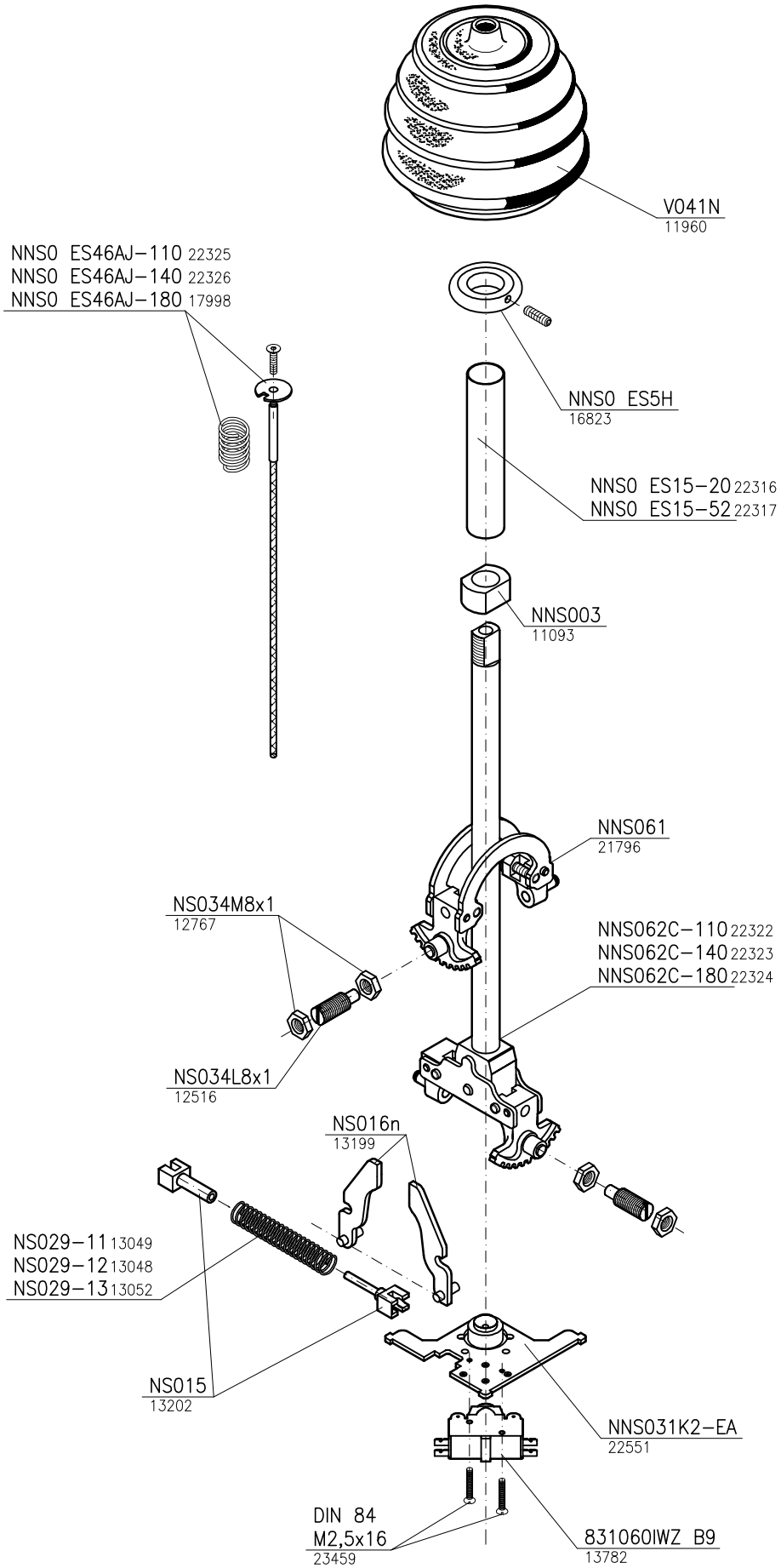

Spohn+Burkhardt
Elektrotechnische Fabrik Blaubeuren

Mauergasse 5
89143 BLAUBEUREN
GERMANY

Tel. +49 7344 171-0 info@spobu.de
Fax +49 7344 171-99 www.spobu.de

Spohn+Burkhardt
Elektrotechnische Fabrik Blaubeuren

Mauergasse 5
89143 BLAUBEUREN
GERMANY

Tel. +49 7344 171-0
Fax +49 7344 171-99
info@spobu.de
www.spobu.de

Ersatzteile Schalter VNS0-H, NS0-H

Spare parts controller

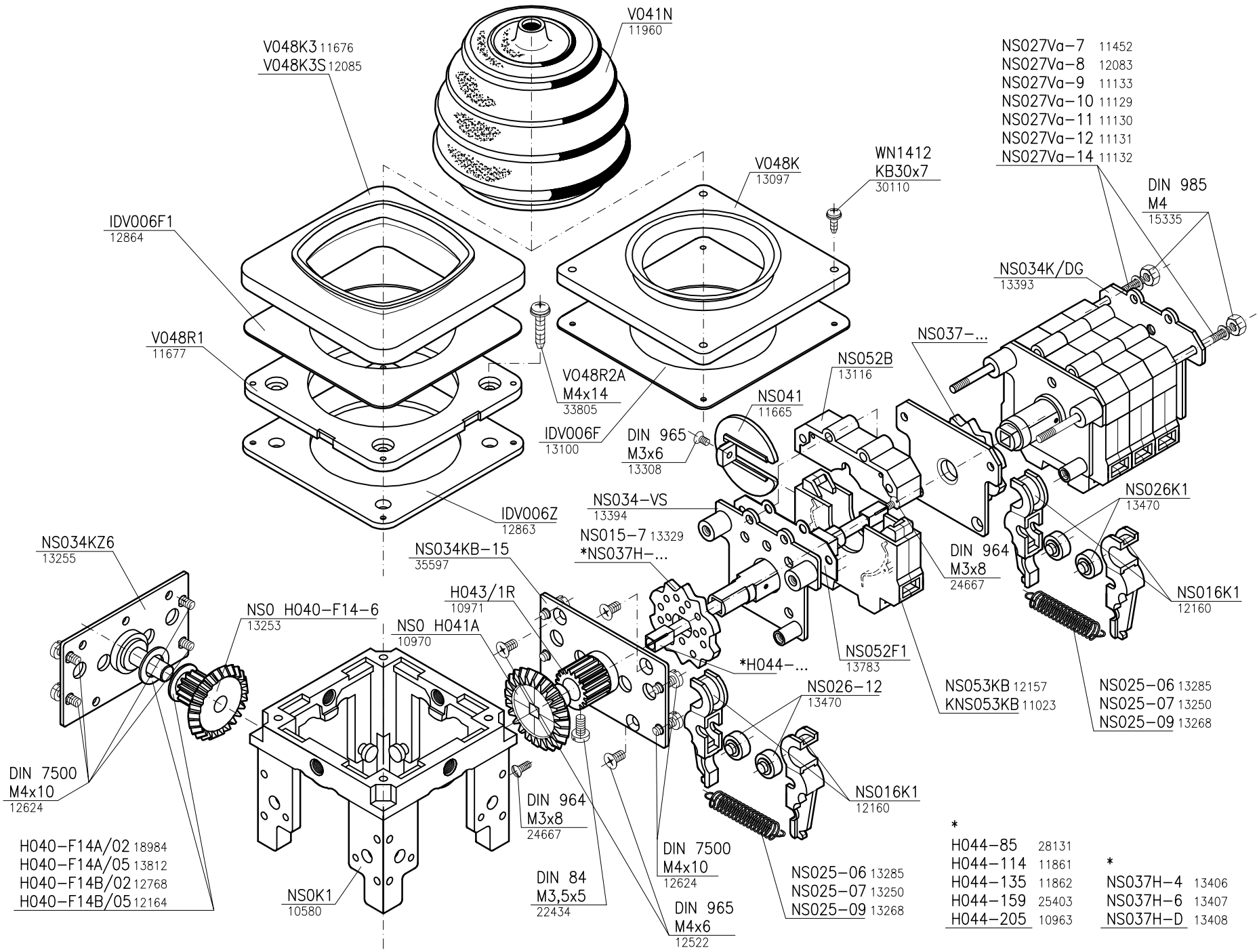

*

H044-85	28131
H044-114	11861
H044-135	11862
H044-159	25403
H044-205	10963

*

NS037H-4	13406
NS037H-6	13407
NS037H-D	13408

E 9/5
2014

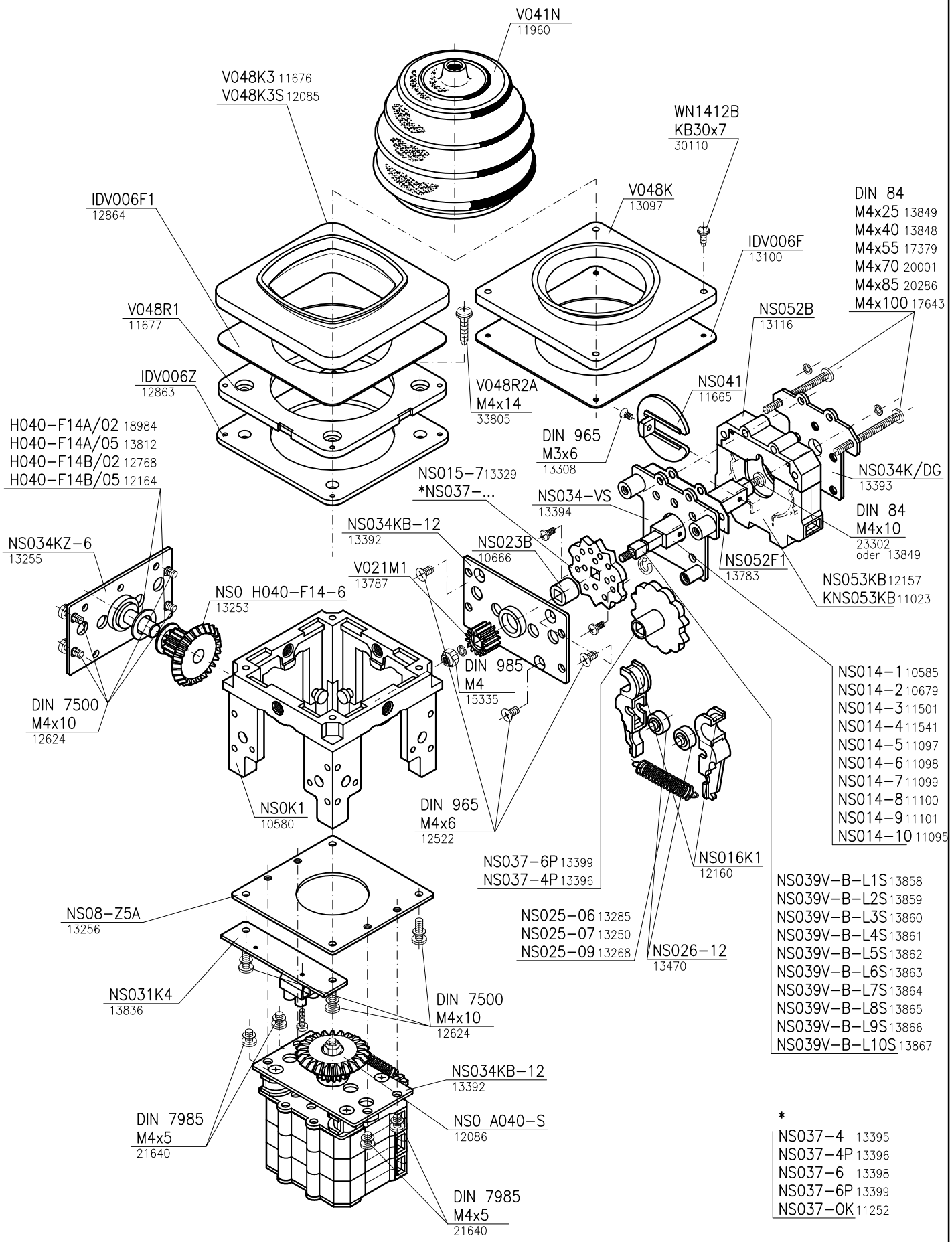

Spohn+Burkhardt
Elektrotechnische Fabrik Blaubeuren

Mauergasse 5
89143 BLAUBEUREN
GERMANY

Tel. +49 7344 171-0 info@spobu.de
Fax +49 7344 171-99 www.spobu.de

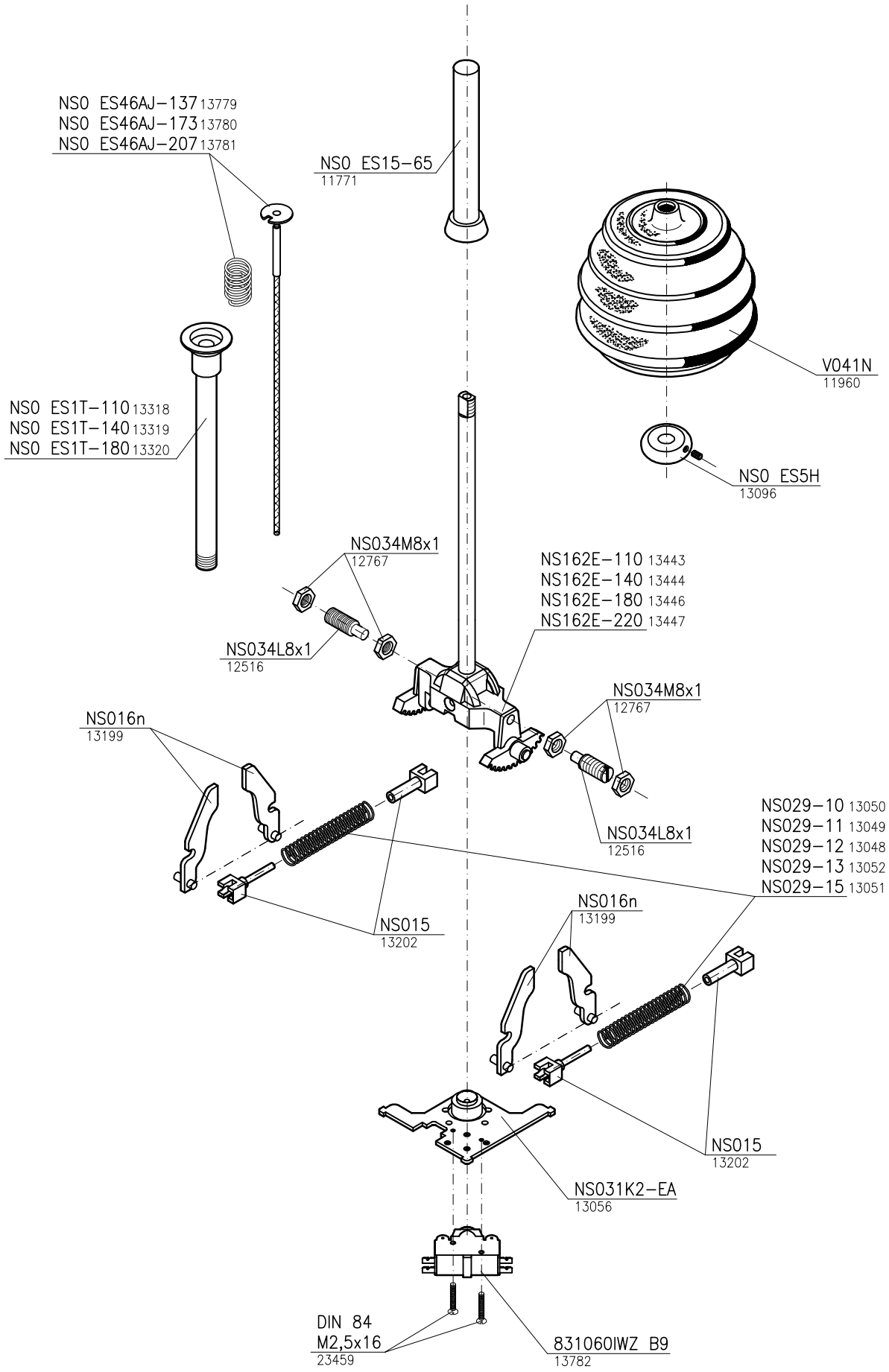

Spohn+Burkhardt
Elektrotechnische Fabrik Blaubeuren

Mauergasse 5
89143 BLAUBEUREN
GERMANY

Tel. +49 7344 171-0 info@spobu.de
Fax +49 7344 171-99 www.spobu.de

Ersatzteile Hebel iZ VNS0-E, VNS0-A, VNS0-G
Schlitzkulisse und Verdrehsicherung
Spare parts lever

E 9/9-1A
2014

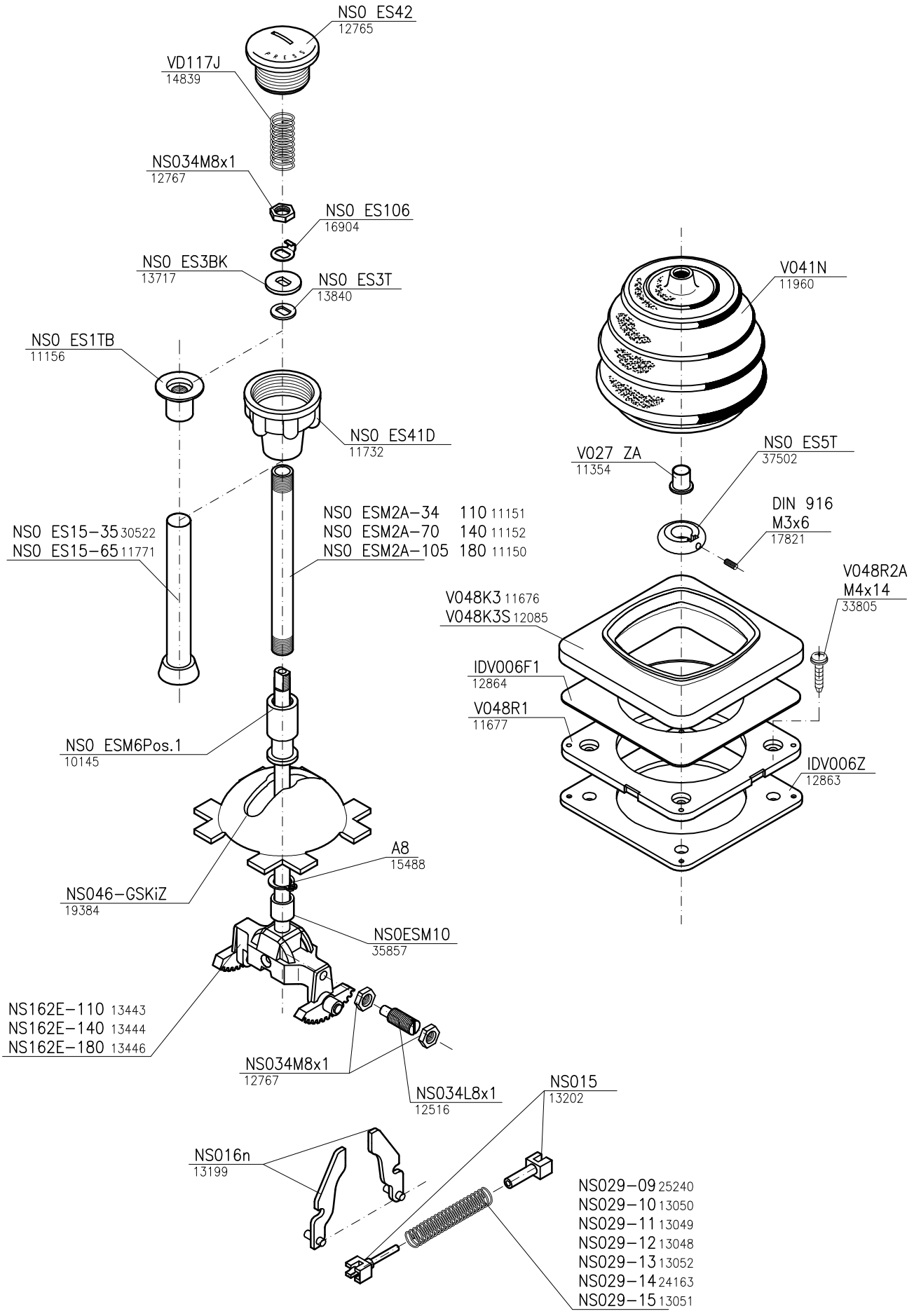

Spohn+Burkhardt
Elektrotechnische Fabrik Blaubeuren

Mauergasse 5
89143 BLAUBEUREN
GERMANY

Tel. +49 7344 171-0 info@spobu.de
Fax +49 7344 171-99 www.spobu.de

Ersatzteile Hebel iZ VNS0–V, VNS0–EA, VNS0–H, VNS0–AA
Kreuzkulisse und Verdrehsicherung
Spare parts lever

E 9/9-2A
2014

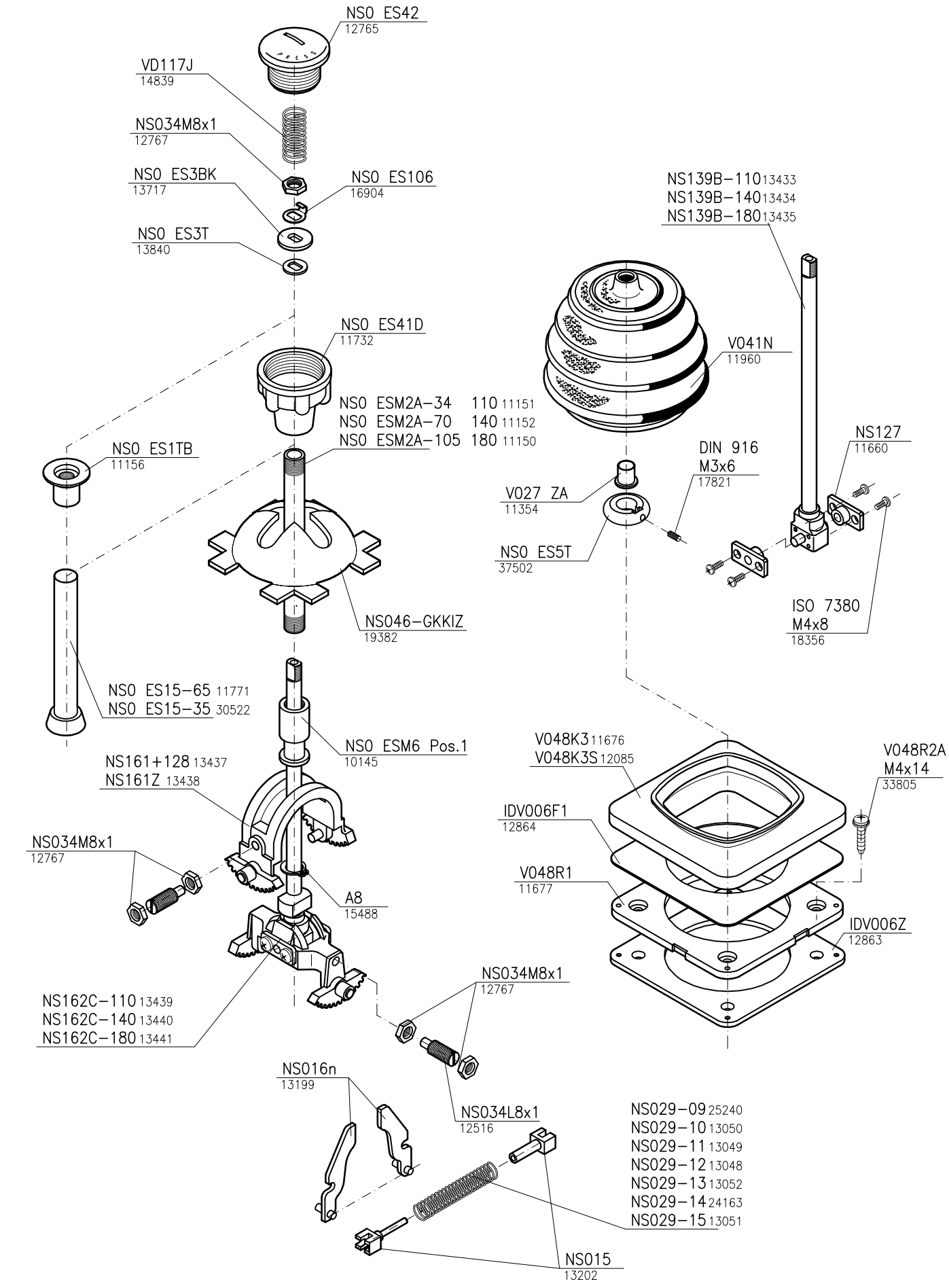

Spohn+Burkhardt
Elektrotechnische Fabrik Blaubeuren

Mauergasse 5
89143 BLAUBEUREN
GERMANY

Tel. +49 7344 171-0 info@spobu.de
Fax +49 7344 171-99 www.spobu.de

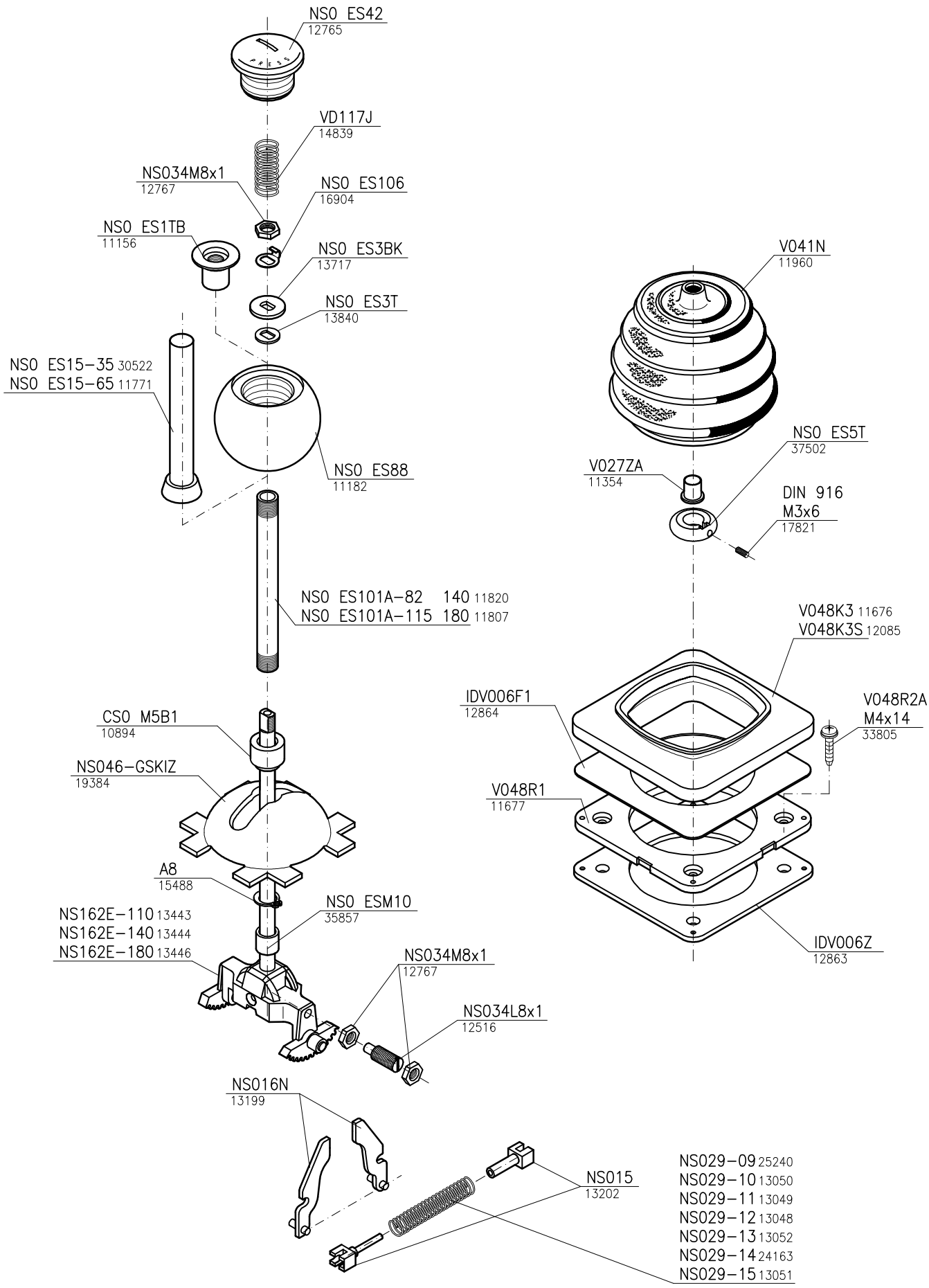

Spohn+Burkhardt
Elektrotechnische Fabrik Blaubeuren

Mauergasse 5
89143 BLAUBEUREN
GERMANY

Tel. +49 7344 171-0 info@spobu.de
Fax +49 7344 171-99 www.spobu.de

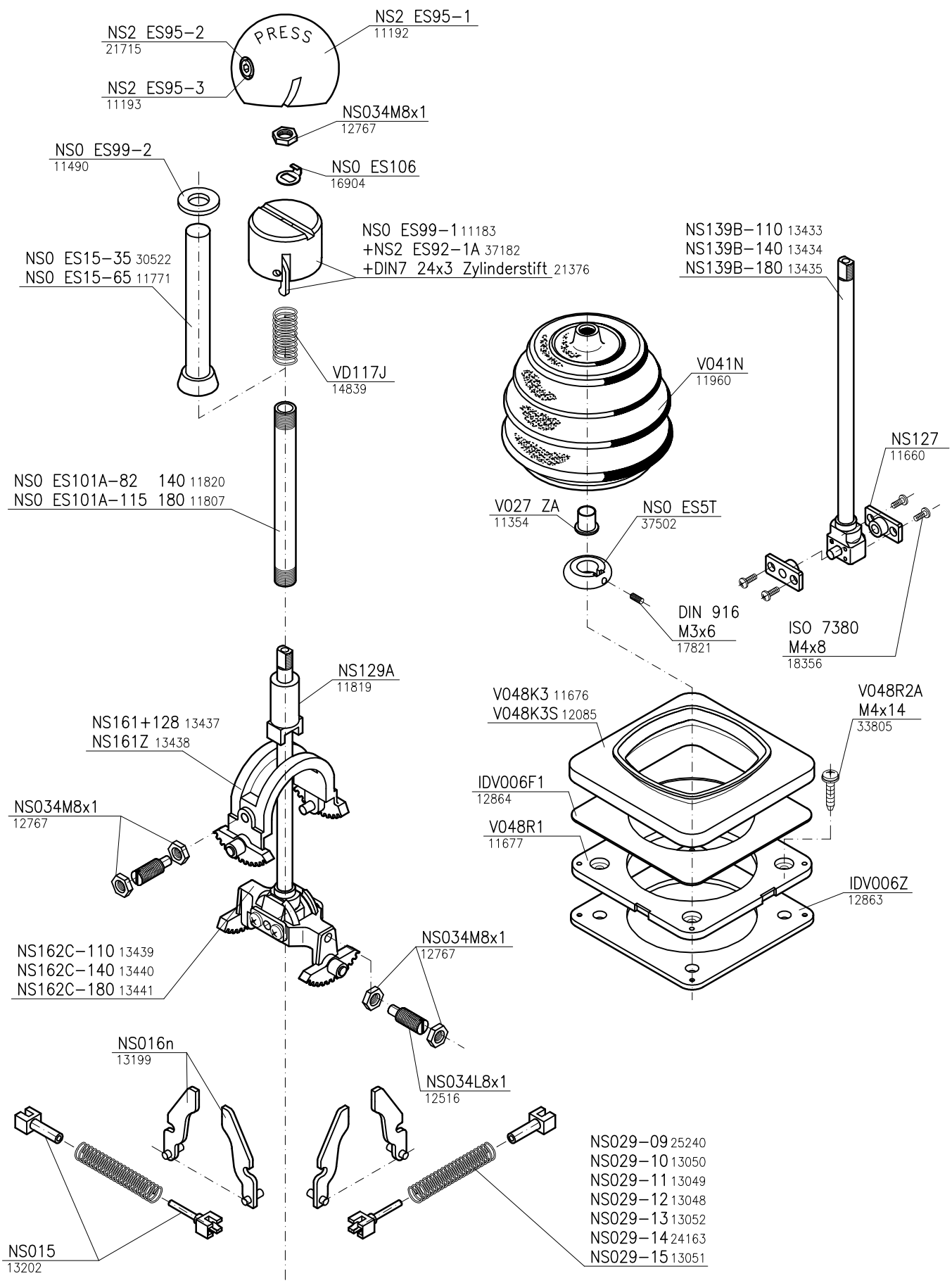

Spohn+Burkhardt
Elektrotechnische Fabrik Blaubeuren

Mauergasse 5
89143 BLAUBEUREN
GERMANY

Tel. +49 7344 171-0 info@spobu.de
Fax +49 7344 171-99 www.spobu.de

Griffoberteile VNS0, NS0
Spare parts for handles

E 9/9
2014

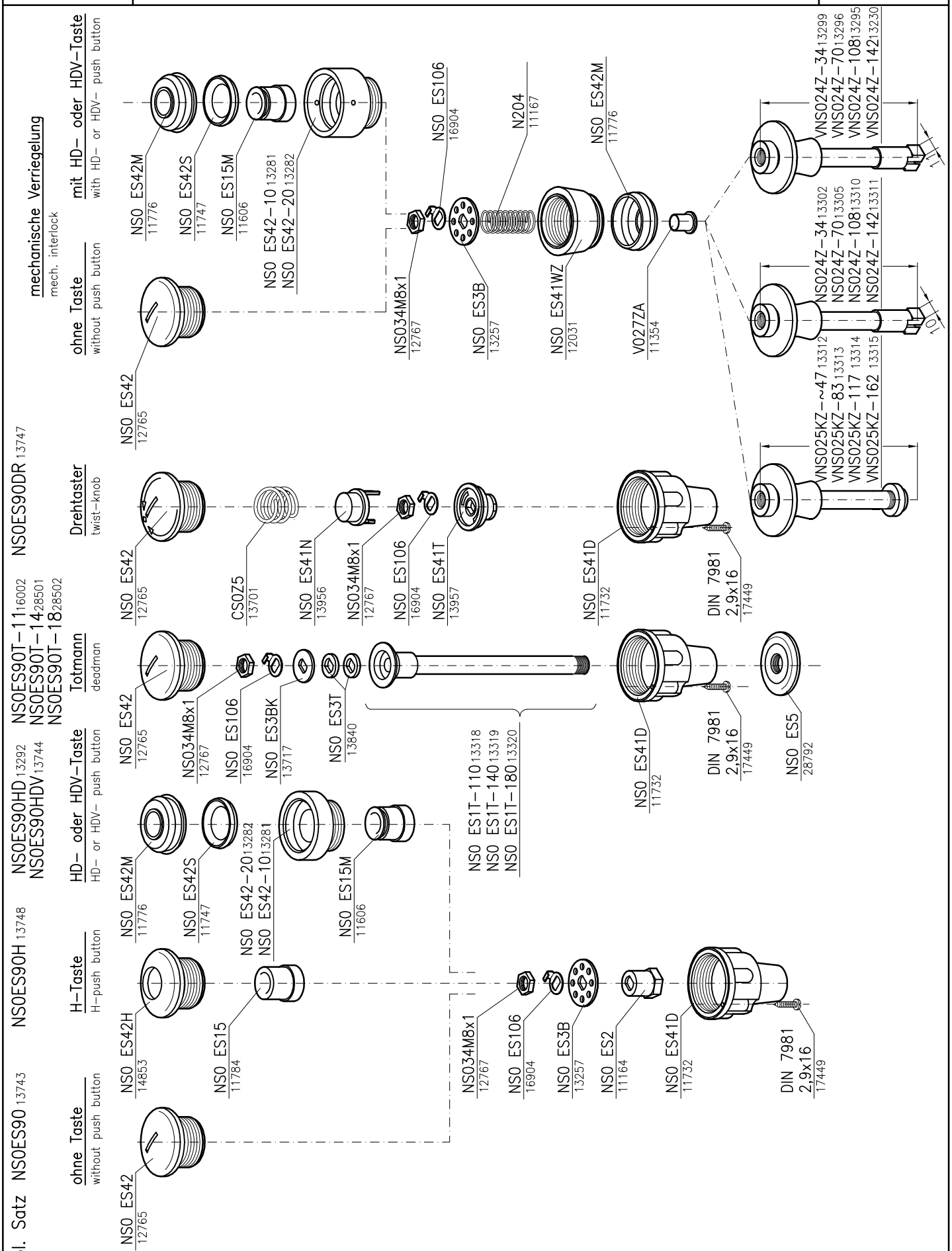

Spohn+Burkhardt
Elektrotechnische Fabrik Blaubeuren

Mauergasse 5
89143 BLAUBEUREN
GERMANY

Tel. +49 7344 171-0 info@spobu.de
Fax +49 7344 171-99 www.spobu.de

Ersatzteile Schalter VNS2-E, NS2-E, VNS2-V, NS2-V

Spare parts controller

E 10/1
2014

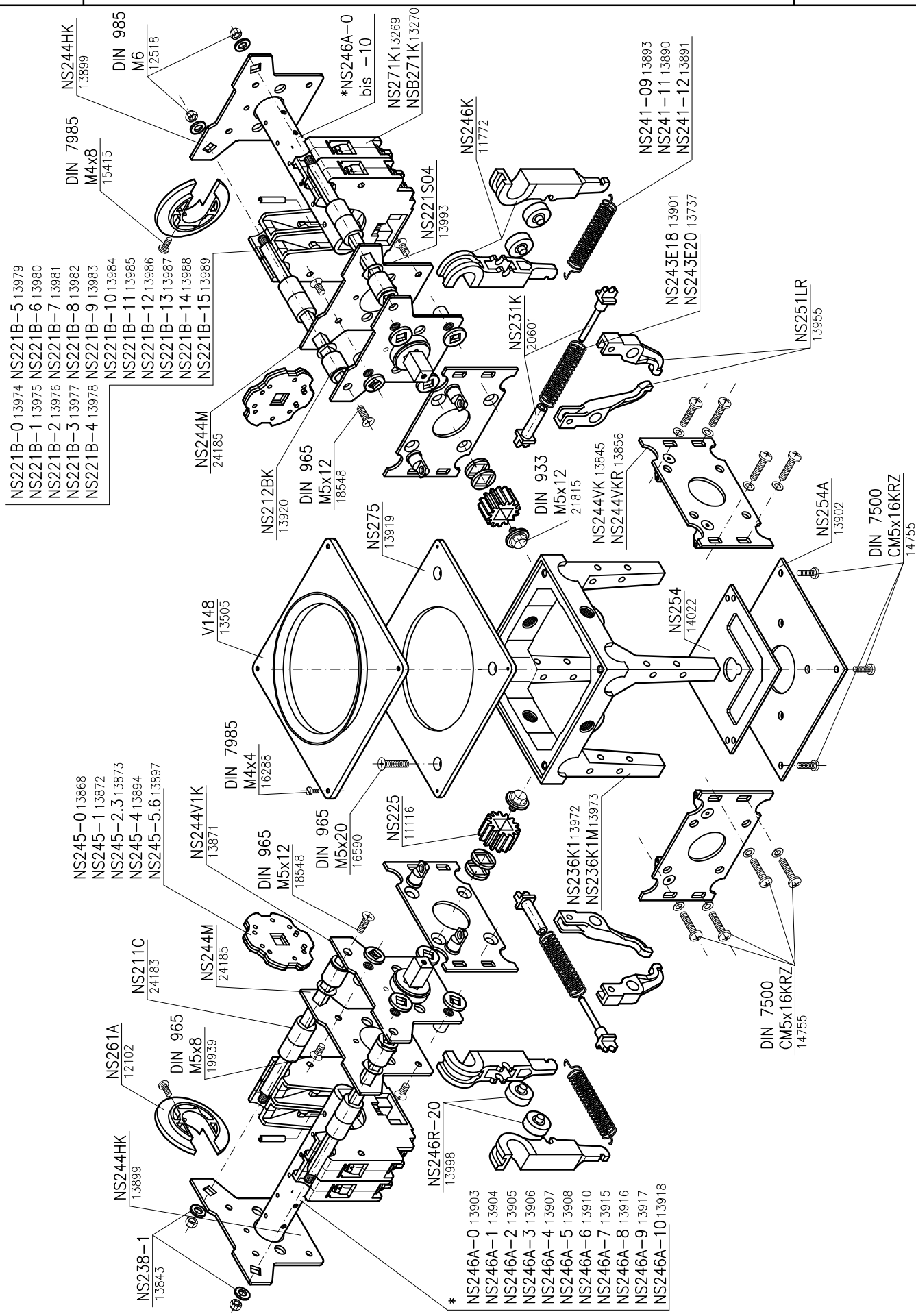

Spohn+Burkhardt
Elektrotechnische Fabrik Blaubeuren

Mauergasse 5
89143 BLAUBEUREN
GERMANY

Tel. +49 7344 171-0 info@spobu.de
Fax +49 7344 171-99 www.spobu.de

Ersatzteile Schalter VNS2–A, NS2–A, VNS2–EA, NS2–EA

Spare parts controller

E 10/2
2014

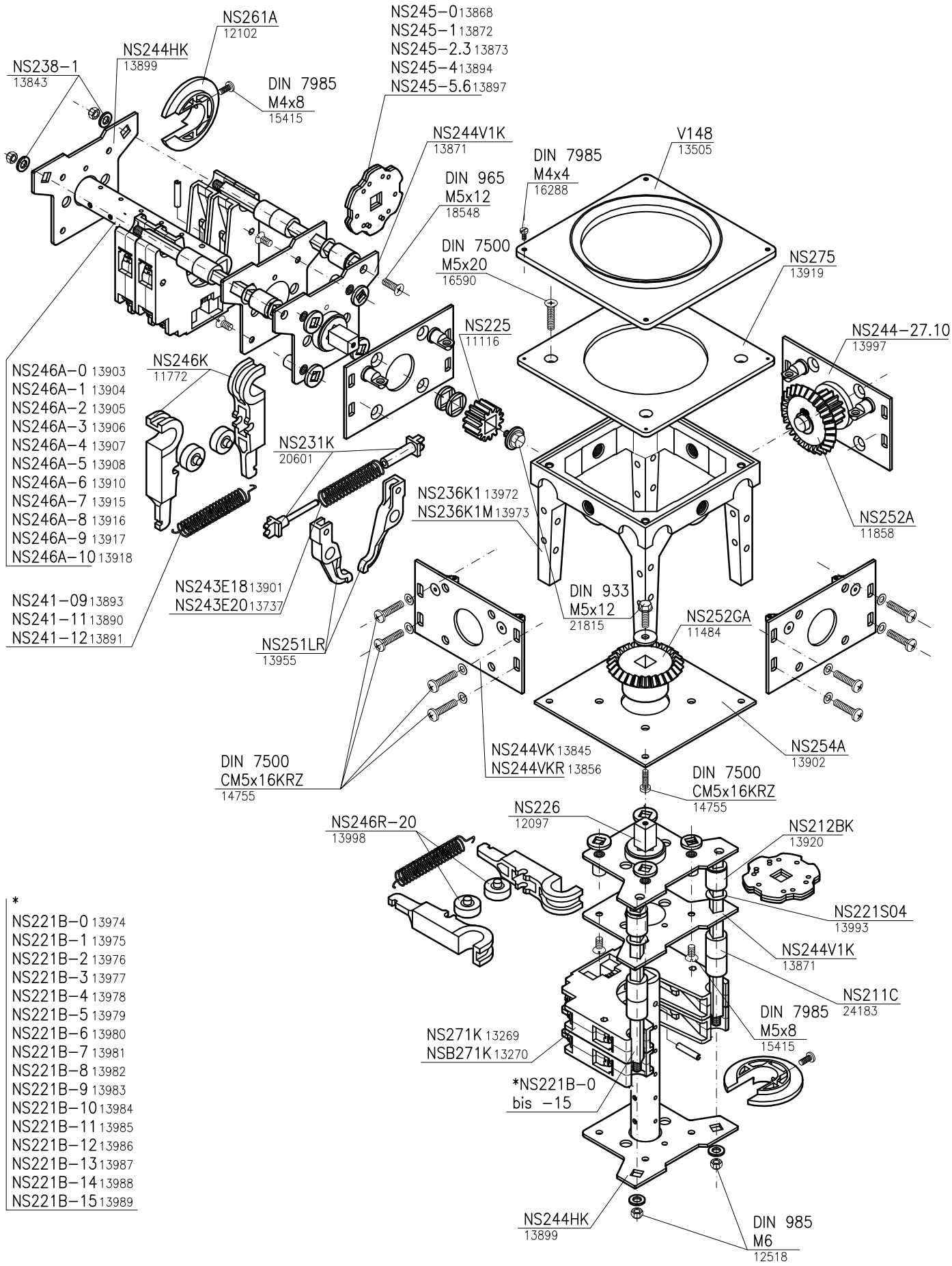

*

NS221B–0 13974
NS221B–1 13975
NS221B–2 13976
NS221B–3 13977
NS221B–4 13978
NS221B–5 13979
NS221B–6 13980
NS221B–7 13981
NS221B–8 13982
NS221B–9 13983
NS221B–10 13984
NS221B–11 13985
NS221B–12 13986
NS221B–13 13987
NS221B–14 13988
NS221B–15 13989

Spohn+Burkhardt
Elektrotechnische Fabrik Blaubeuren

Mauergasse 5
89143 BLAUBEUREN
GERMANY

Tel. +49 7344 171-0 info@spobu.de
Fax +49 7344 171-99 www.spobu.de

Ersatzteile Hebel VNS2–A, VNS2–E
Spare parts lever

E 10/3
2014

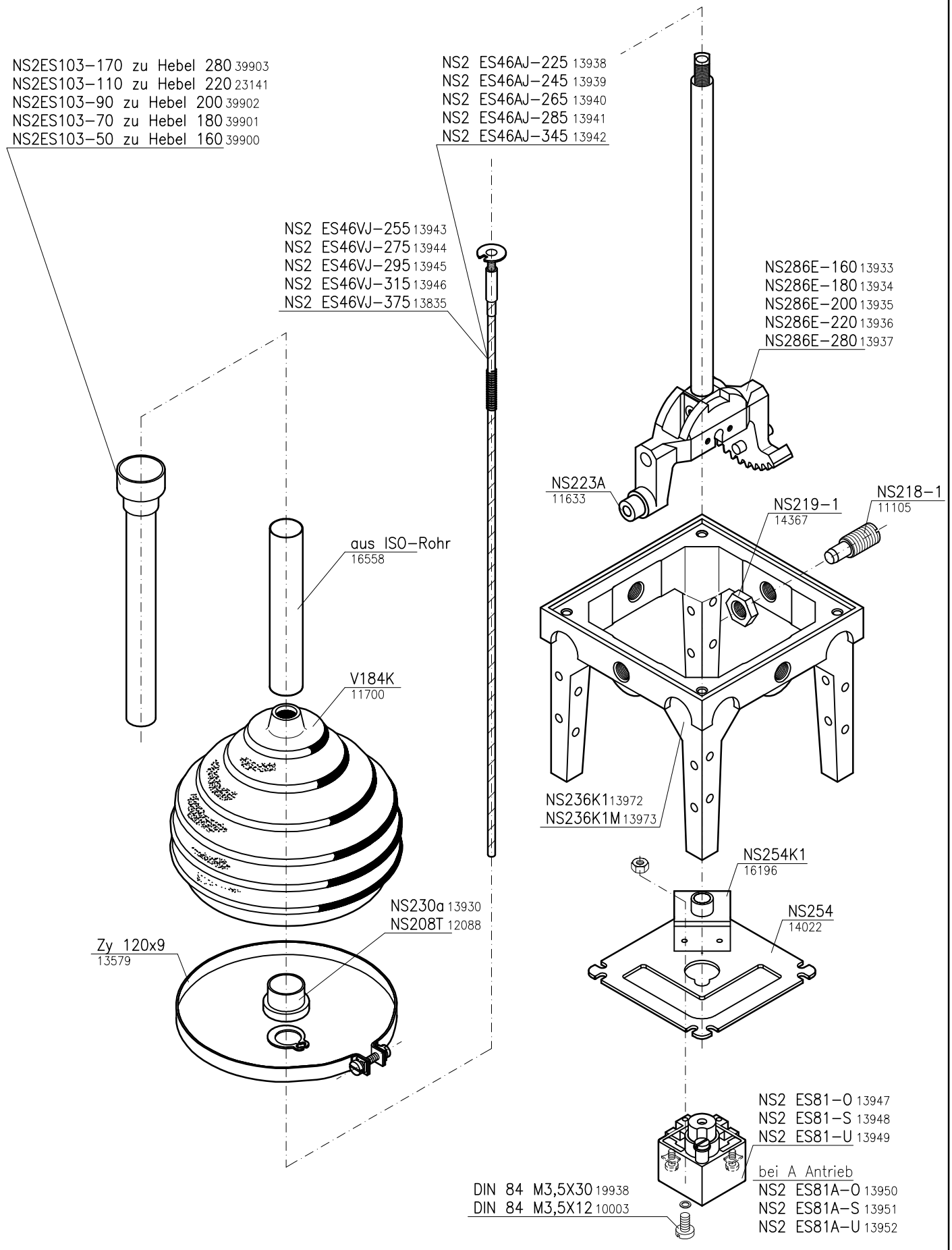

Spohn+Burkhardt
Elektrotechnische Fabrik Blaubeuren

Mauergasse 5
89143 BLAUBEUREN
GERMANY

Tel. +49 7344 171-0 info@spobu.de
Fax +49 7344 171-99 www.spobu.de

Ersatzteile Hebel VNS2–EA, VNS2–V
Spare parts lever

E 10/7
2014

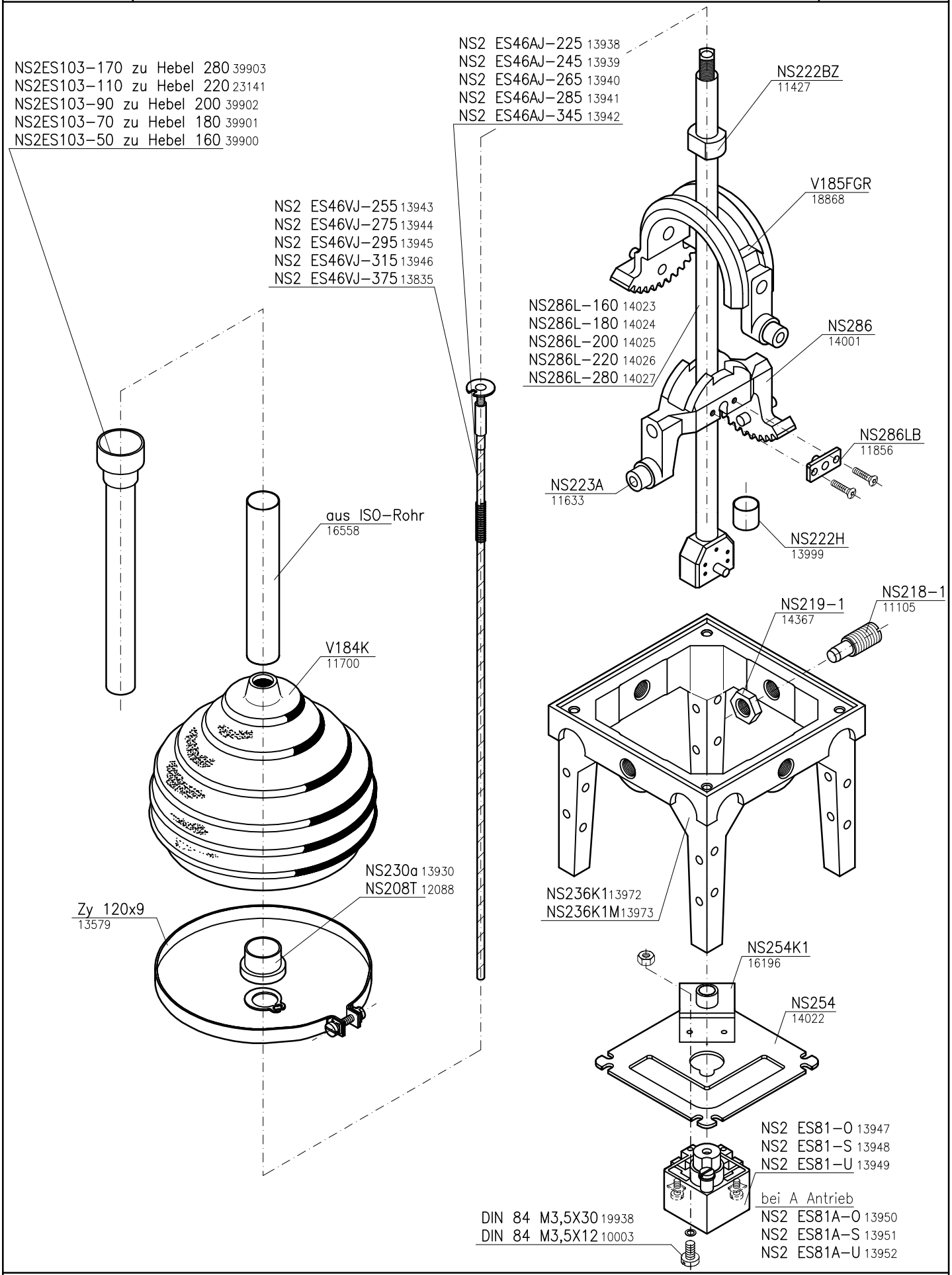

Spohn+Burkhardt
Elektrotechnische Fabrik Blaubeuren

Mauergasse 5
89143 BLAUBEUREN
GERMANY

Tel. +49 7344 171-0 info@spobu.de
Fax +49 7344 171-99 www.spobu.de

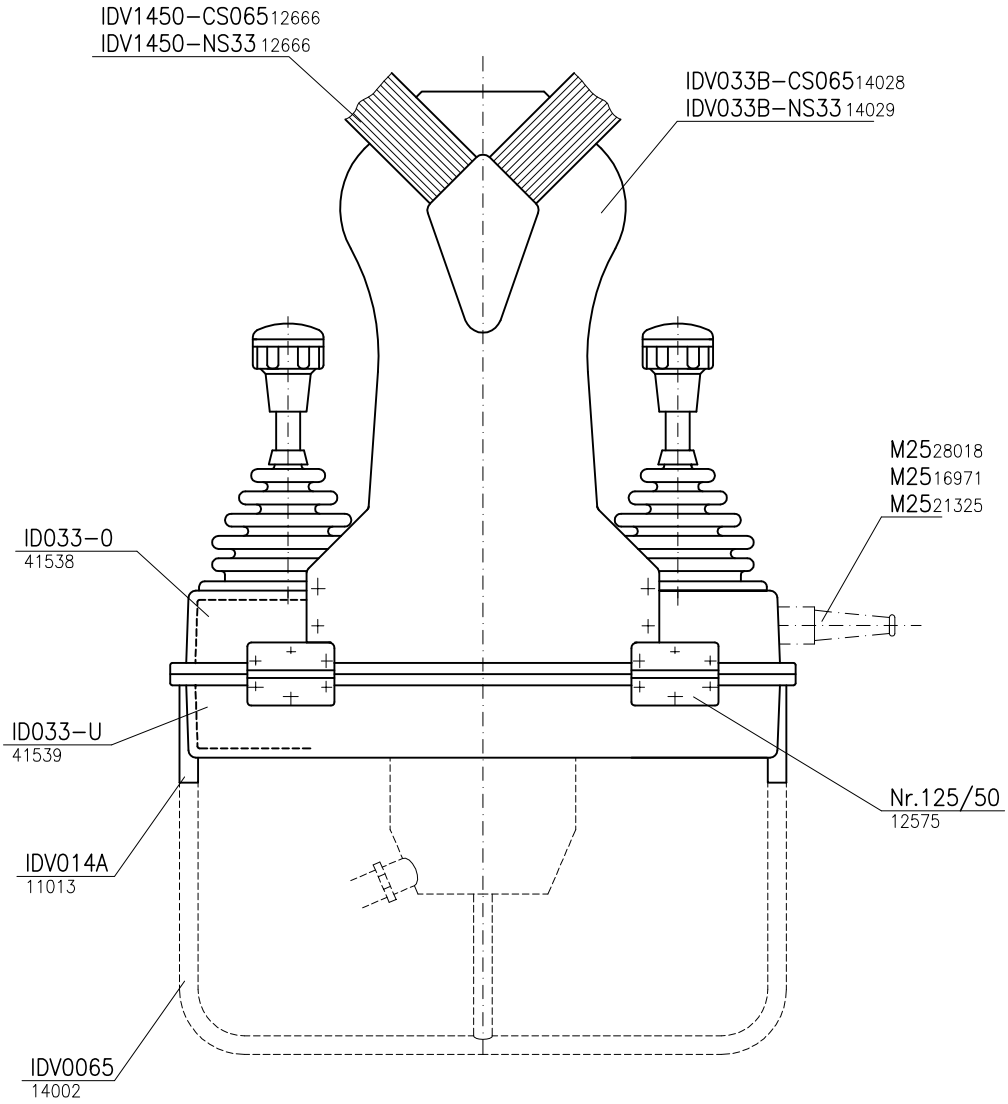

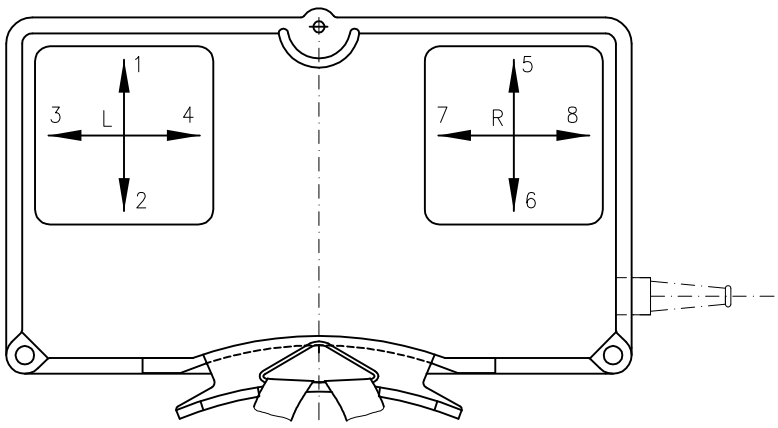

Spohn+Burkhardt
Elektrotechnische Fabrik Blaubeuren

Mauergasse 5
89143 BLAUBEUREN
GERMANY

Tel. +49 7344 171-0 info@spobu.de
Fax +49 7344 171-99 www.spobu.de

Gehäuse GFK, Schutzart IP54
Ersatztyp für IDV NS56 R

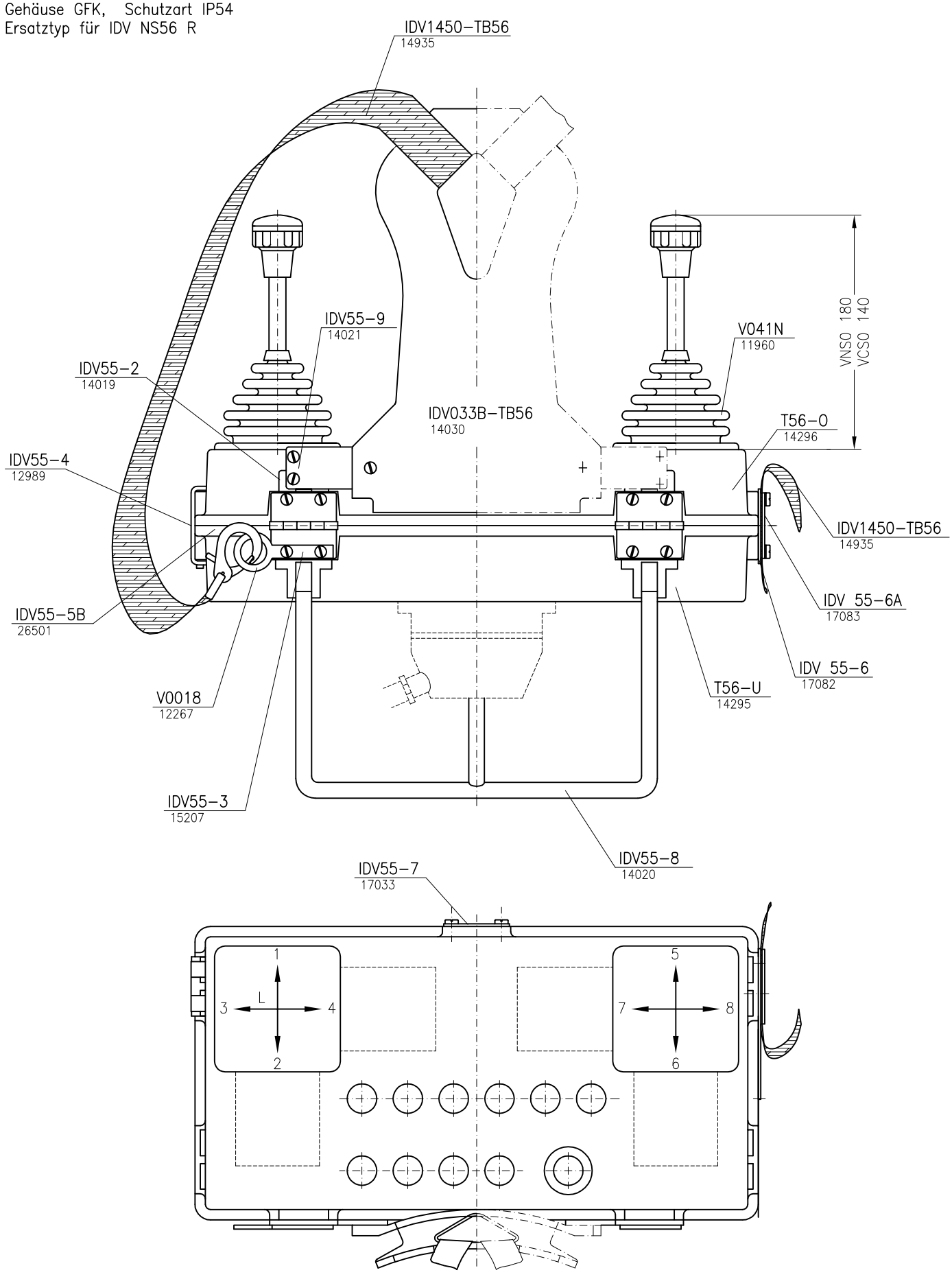

Spohn+Burkhardt
Elektrotechnische Fabrik Blaubeuren

Mauergasse 5
89143 BLAUBEUREN
GERMANY

Tel. +49 7344 171-0 info@spobu.de
Fax +49 7344 171-99 www.spobu.de

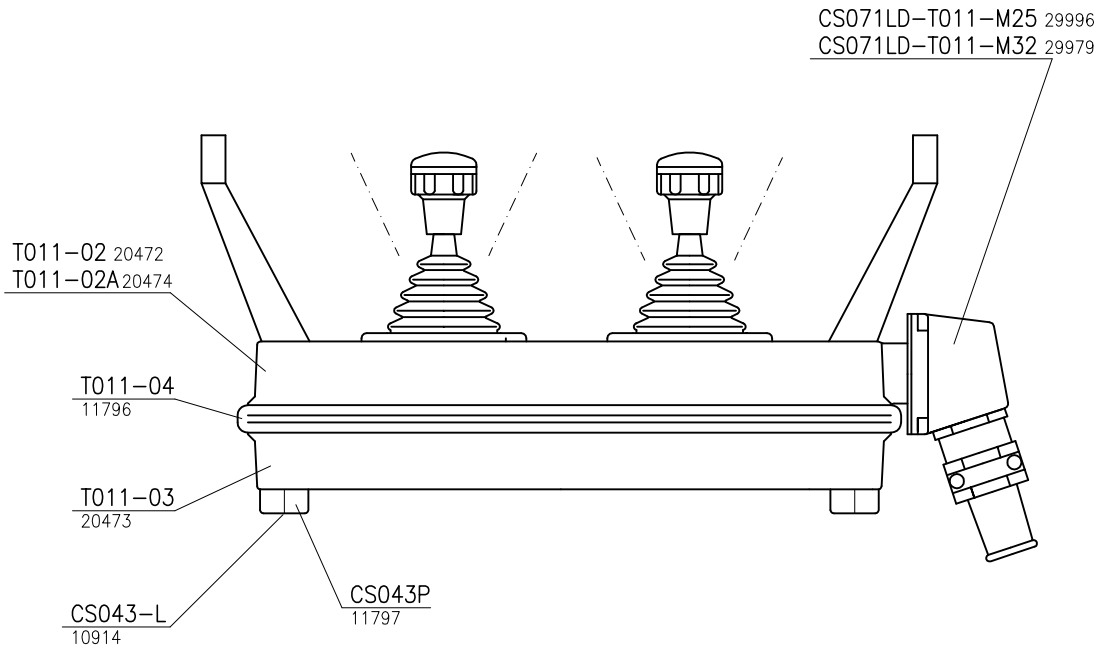

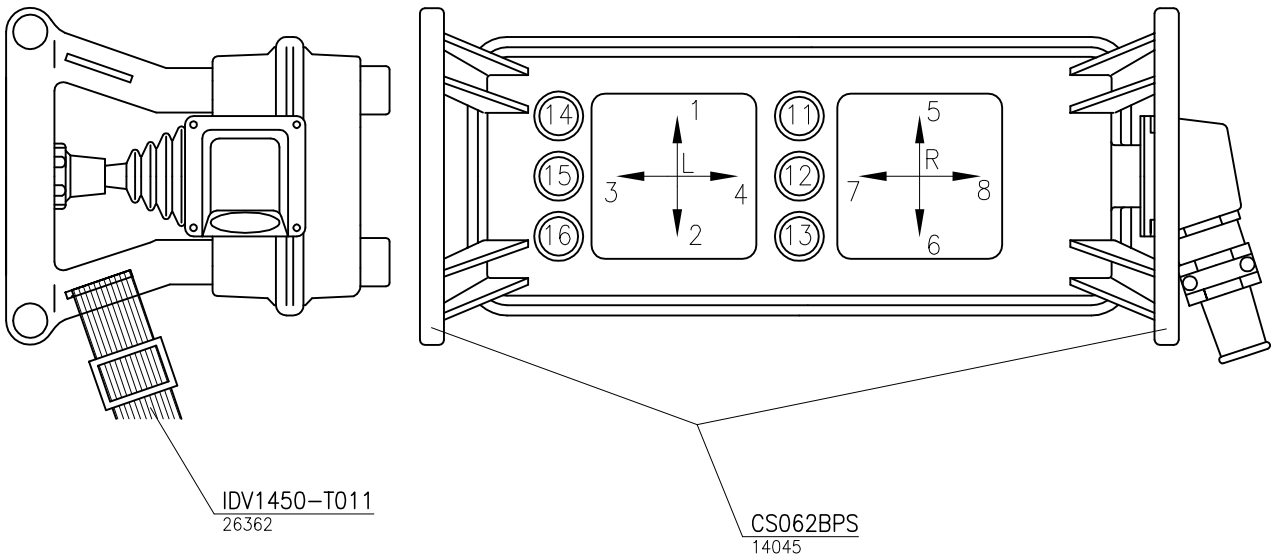

Spohn+Burkhardt
Elektrotechnische Fabrik Blaubeuren

Mauergasse 5
89143 BLAUBEUREN
GERMANY

Tel. +49 7344 171-0 info@spobu.de
Fax +49 7344 171-99 www.spobu.de

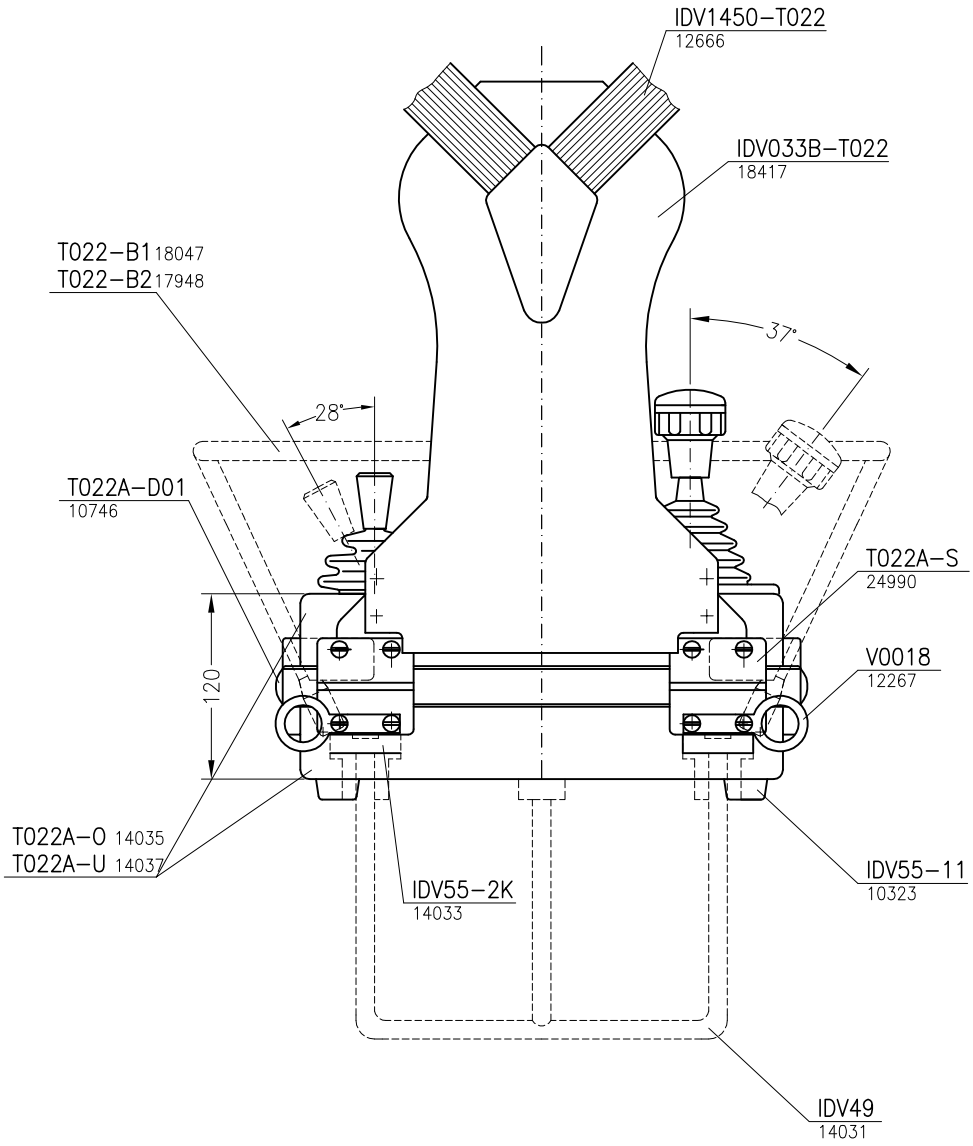

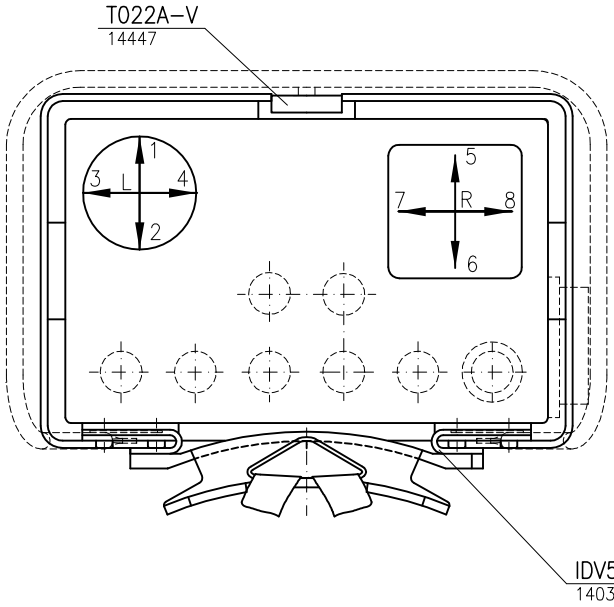

Spohn+Burkhardt
Elektrotechnische Fabrik Blaubeuren

Mauergasse 5
89143 BLAUBEUREN
GERMANY

Tel. +49 7344 171-0 info@spobu.de
Fax +49 7344 171-99 www.spobu.de

Ersatzteile für Drehbewegung mit Pedal Arretierung
Spare parts for rotating system with spring loaded pin stopper

E 22/10
2014

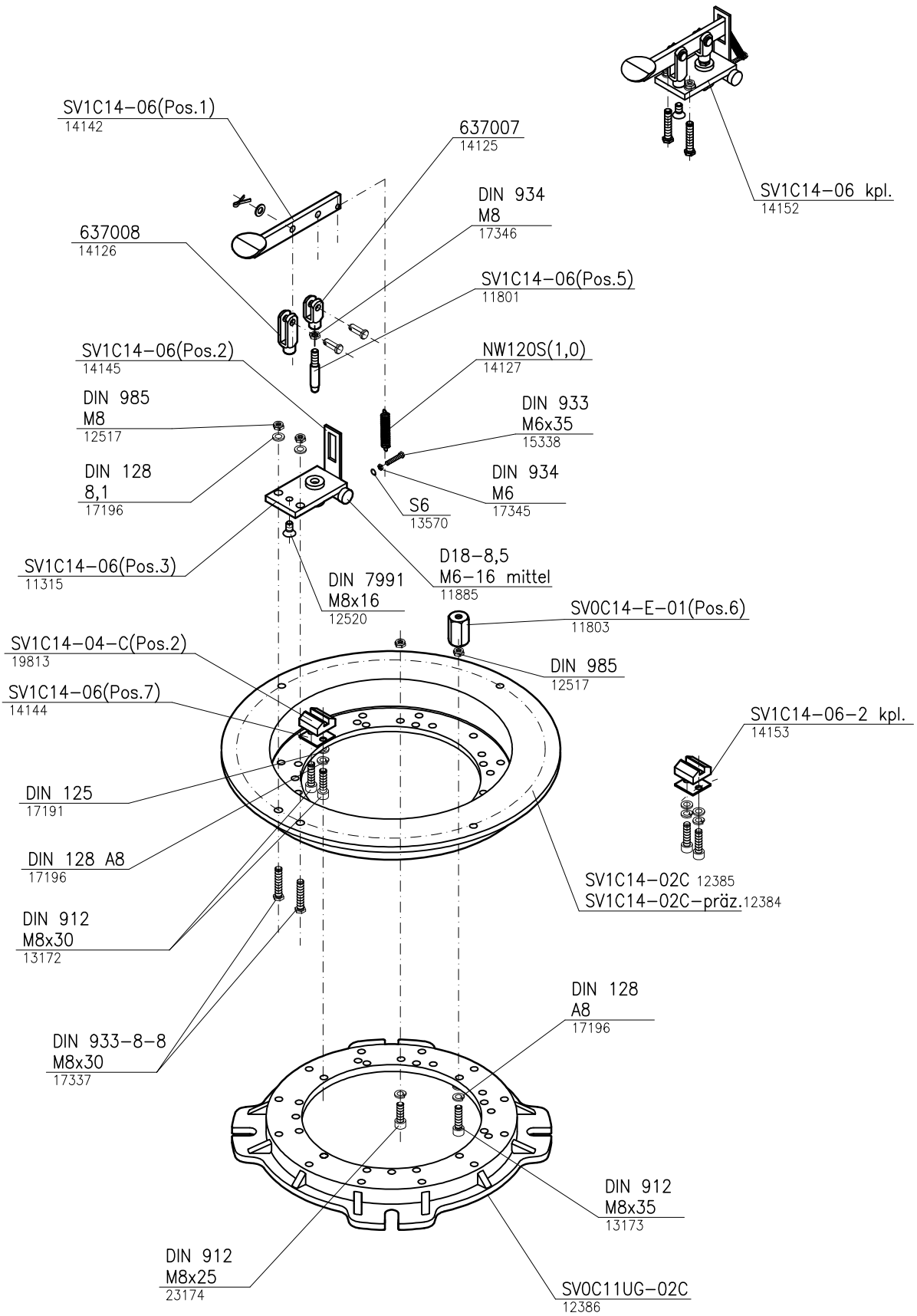

Spohn+Burkhardt
Elektrotechnische Fabrik Blaubeuren

Mauergasse 5
89143 BLAUBEUREN
GERMANY

Tel. +49 7344 171-0 info@spobu.de
Fax +49 7344 171-99 www.spobu.de

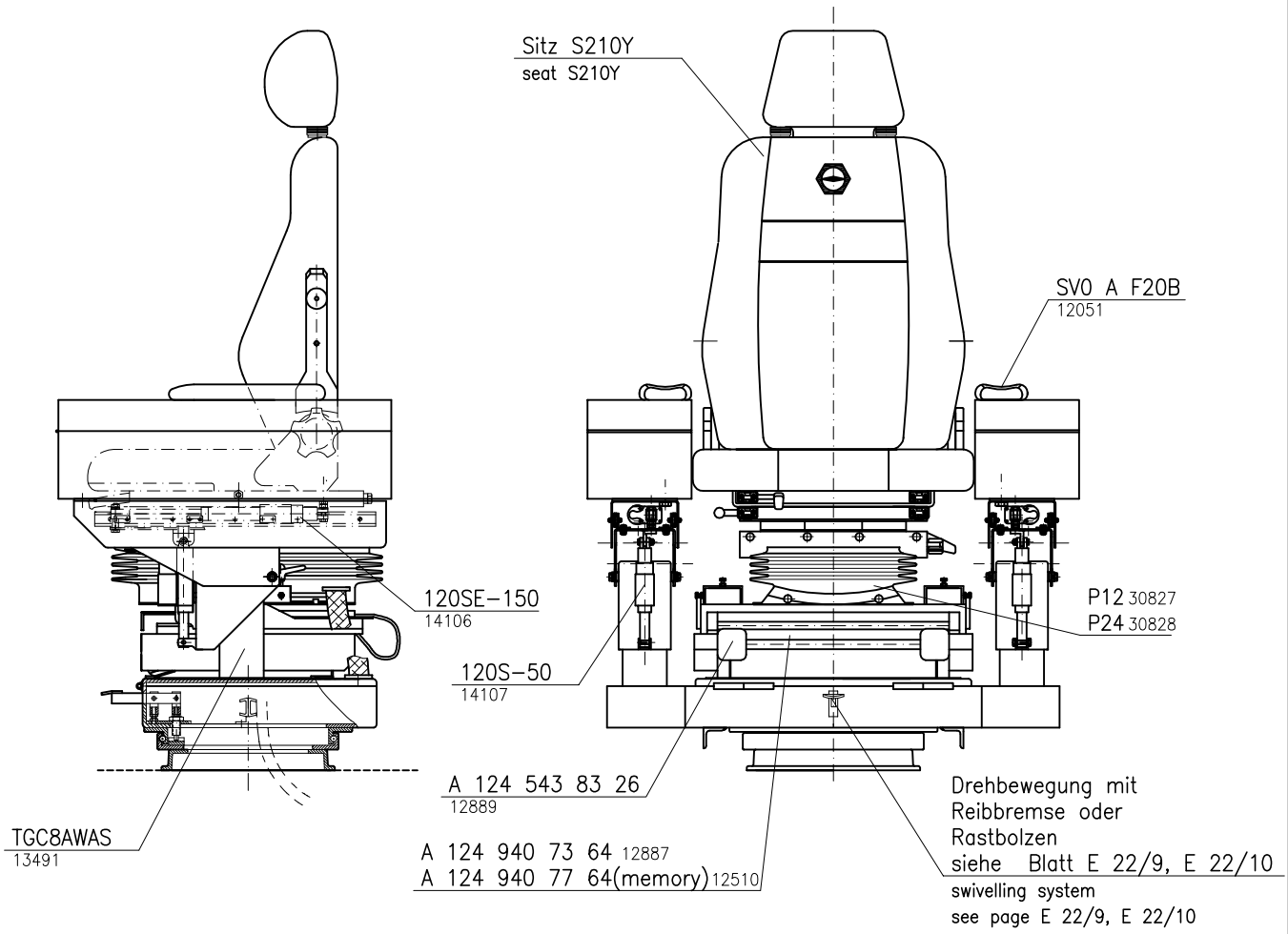

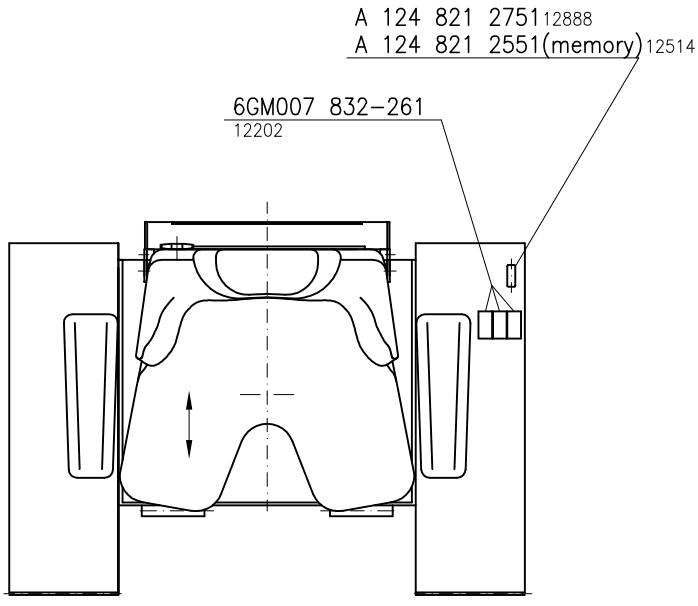

Spohn+Burkhardt
Elektrotechnische Fabrik Blaubeuren

Mauergasse 5
89143 BLAUBEUREN
GERMANY

Tel. +49 7344 171-0 info@spobu.de
Fax +49 7344 171-99 www.spobu.de

Spohn+Burkhardt
Elektrotechnische Fabrik Blaubeuren
Mauergasse 5
89143 BLAUBEUREN
GERMANY
Tel. +49 7344 171-0
Fax +49 7344 171-99
info@spobu.de
www.spobu.de

E 22/4
2014

Fahrersitz DS85–S85

Driver seat

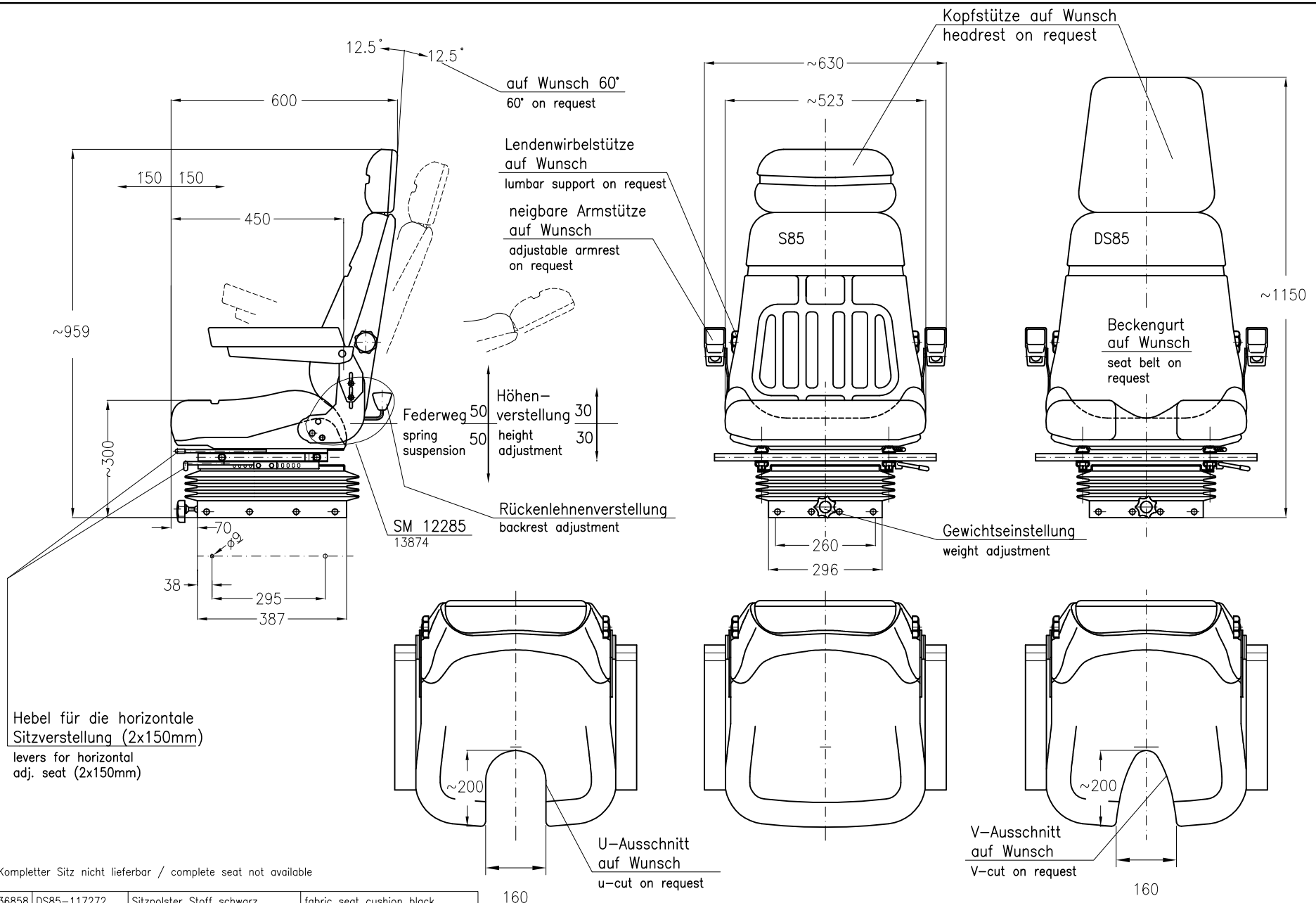

Kompletter Sitz nicht lieferbar / complete seat not available

36858	DS85–117272	Sitzpolster Stoff schwarz	fabric seat cushion black
36964	DS85–117273–1	Rückenpolster Stoff schwarz	fabric backrest cushion black
20759	DS85–130236	Kopfstütze Stoff dynamikblau	fabric headrest blue
14080	DS85–117425	Kopfstütze Stoff schwarz	fabric headrest black
20760	DS85–121697	Kopfstütze Kunstleder schwarz	vinyl headrest black
13874	SM 12285	Reparatursatz Rückenlehne DS85	spare parts backrest DS85

Sitzpolster: velour; dynamikblau, schwarz
Kunstleder schwarz

Upholstery: velour; dynamic blue, black
vinyl black

E 22/4
2014

Fahrersitz ACTIMO S722
Driver seat

E 22/4F
2014

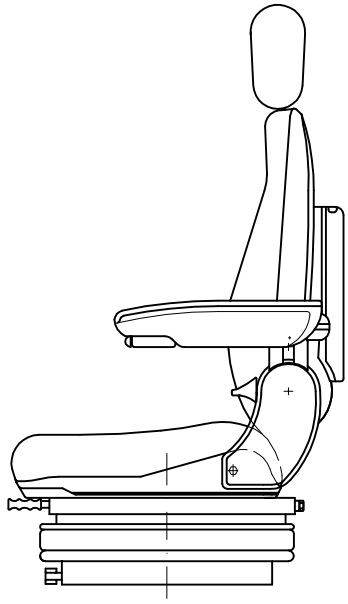

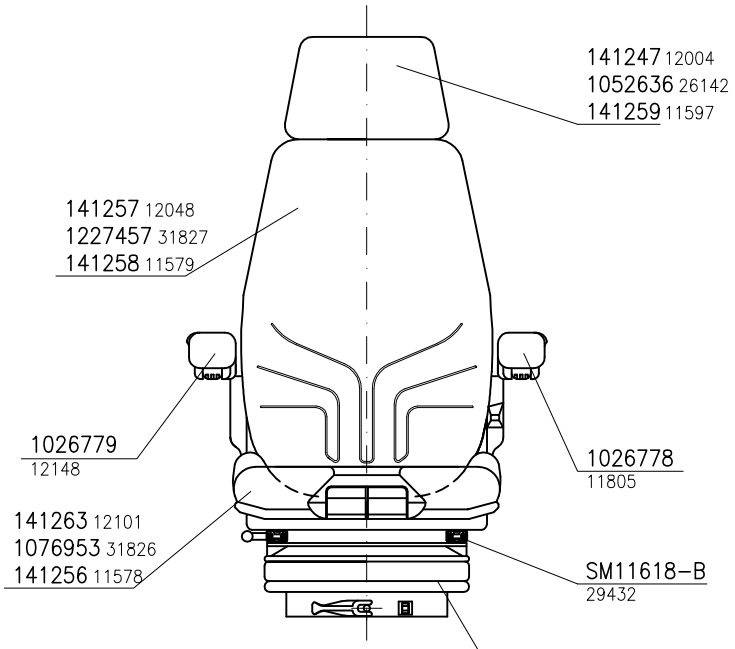

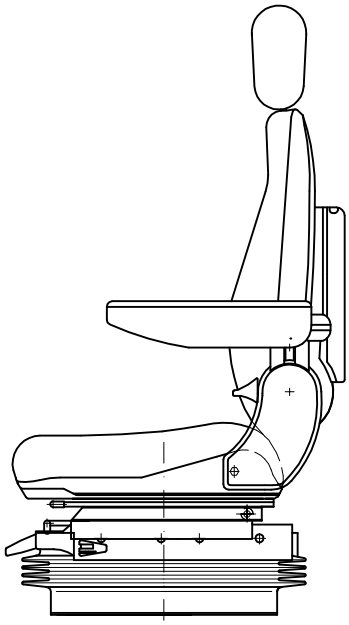

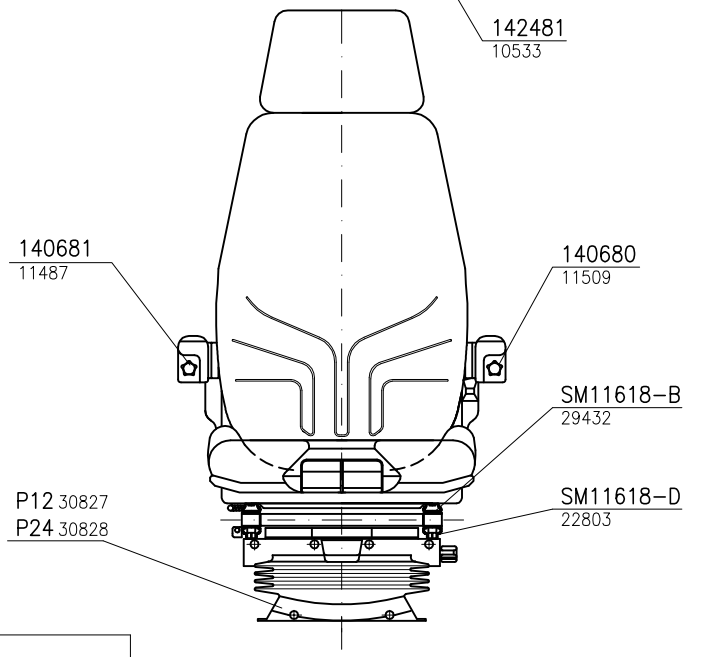

Verstellschienensätze für Sitzlängsverstellung

SM11618-B	SM11618-C	SM11618-D
29432	22805	22803
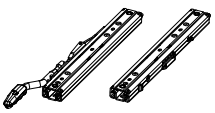		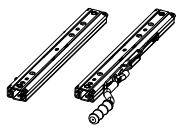

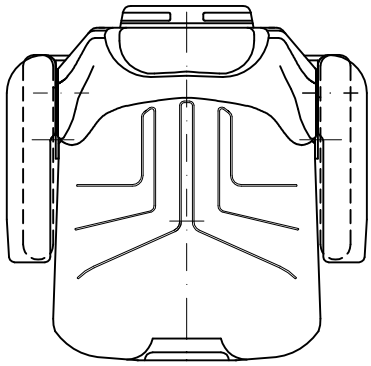

12101	S722-141263 Sitzpolster Stoff dynamikblau	fabric seat cushion blue
31826	S722-1076953 Sitzpolster Stoff schwarz matrix	seat cushion black matrix
11578	S722-141256 Sitzpolster Kunstleder schwarz	vinyl seat cushion black
31827	S722-1227457 Rückenpolster Stoff schwarz matrix	fabric backrest cushion black matrix
26142	S722-1052636 Kopfstütze Stoff schwarz matrix	fabric headrest black matrix
16774	S722-1039311 Armlehne links 80x320	armrest left
16773	S722-1039312 Armlehne rechts 80x320	armrest right
30827	P12 Luftfederung 12 V	pneumatic suspension 12 V
30828	P24 Luftfederung 24 V	pneumatic suspension 24 V
12172	Rallye 3ASM Hosenträgergurt	four point seat belt
12002	902173 2-Punkt-Beckengurt	two point seat belt

Spohn+Burkhardt
Elektrotechnische Fabrik Blaubeuren

Mauergasse 5
89143 BLAUBEUREN
GERMANY

Tel. +49 7344 171-0 info@spobu.de
Fax +49 7344 171-99 www.spobu.de

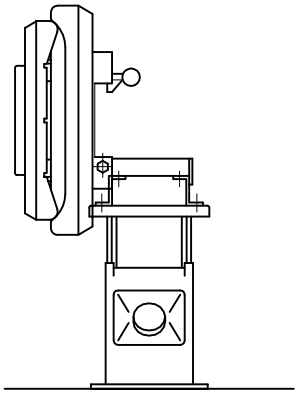

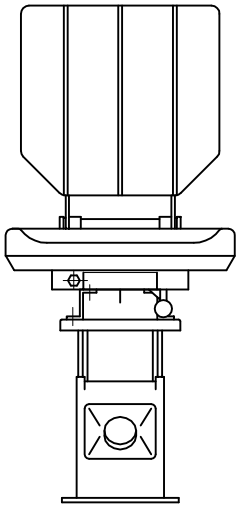

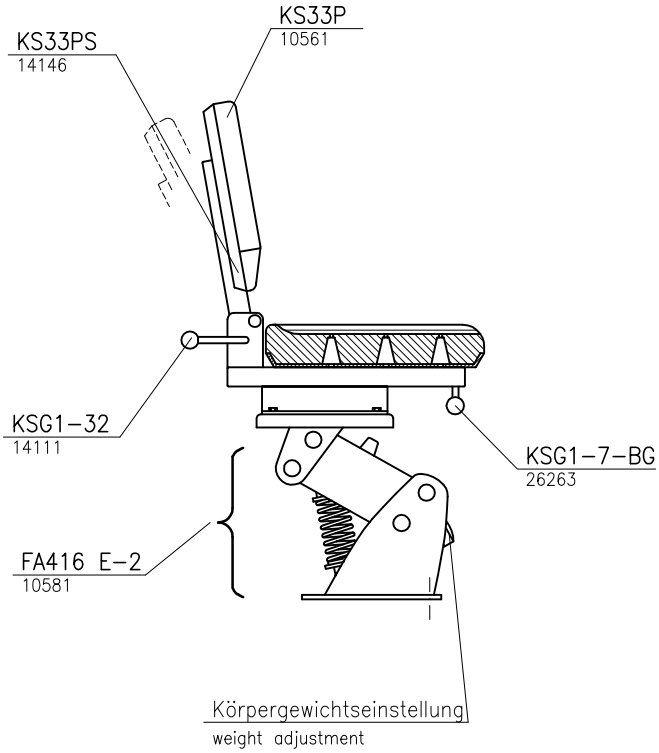

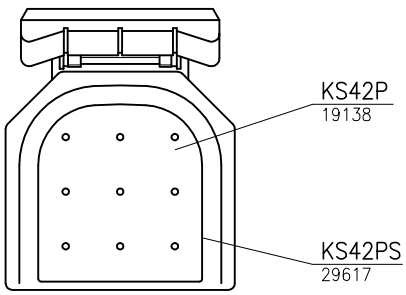

Spohn+Burkhardt
Elektrotechnische Fabrik Blaubeuren

Mauergasse 5
89143 BLAUBEUREN
GERMANY

Tel. +49 7344 171-0 info@spobu.de
Fax +49 7344 171-99 www.spobu.de

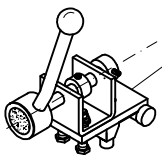

SV0C14-E-kpl.
12390

SV0C14-E-01-Str1
10515

DIN 914 45H
M6x8

SV0C14-E-01(Pos.2)
11317

DIN 916 45H
M5x16
10673

SV0C14E-(Pos.8)
12872

SV0C14E-01-Str2
12856

DIN 933
M8x35
15340

M8
17346

DIN 985
M8
12517

SV0C14-E-01(Pos.4)
11319

SV0C14-E-01(Pos.7)
12858

D18-7.5
M6-16 mittel
11885

SV0C14-E-01(Pos.6)
11803

SV0C14-02A 12385
SV0C14-02A-präz.12384

DIN 933
M8x35
17338

DIN 933
M8x35
17338

SV0C11UG-02A
12386

Spohn+Burkhardt
Elektrotechnische Fabrik Blaubeuren

Mauergasse 5
89143 BLAUBEUREN
GERMANY

Tel. +49 7344 171-0 info@spobu.de
Fax +49 7344 171-99 www.spobu.de

Ersatzteile Pedalsteller FPW
Spare parts foot switch

E 24/1
2014

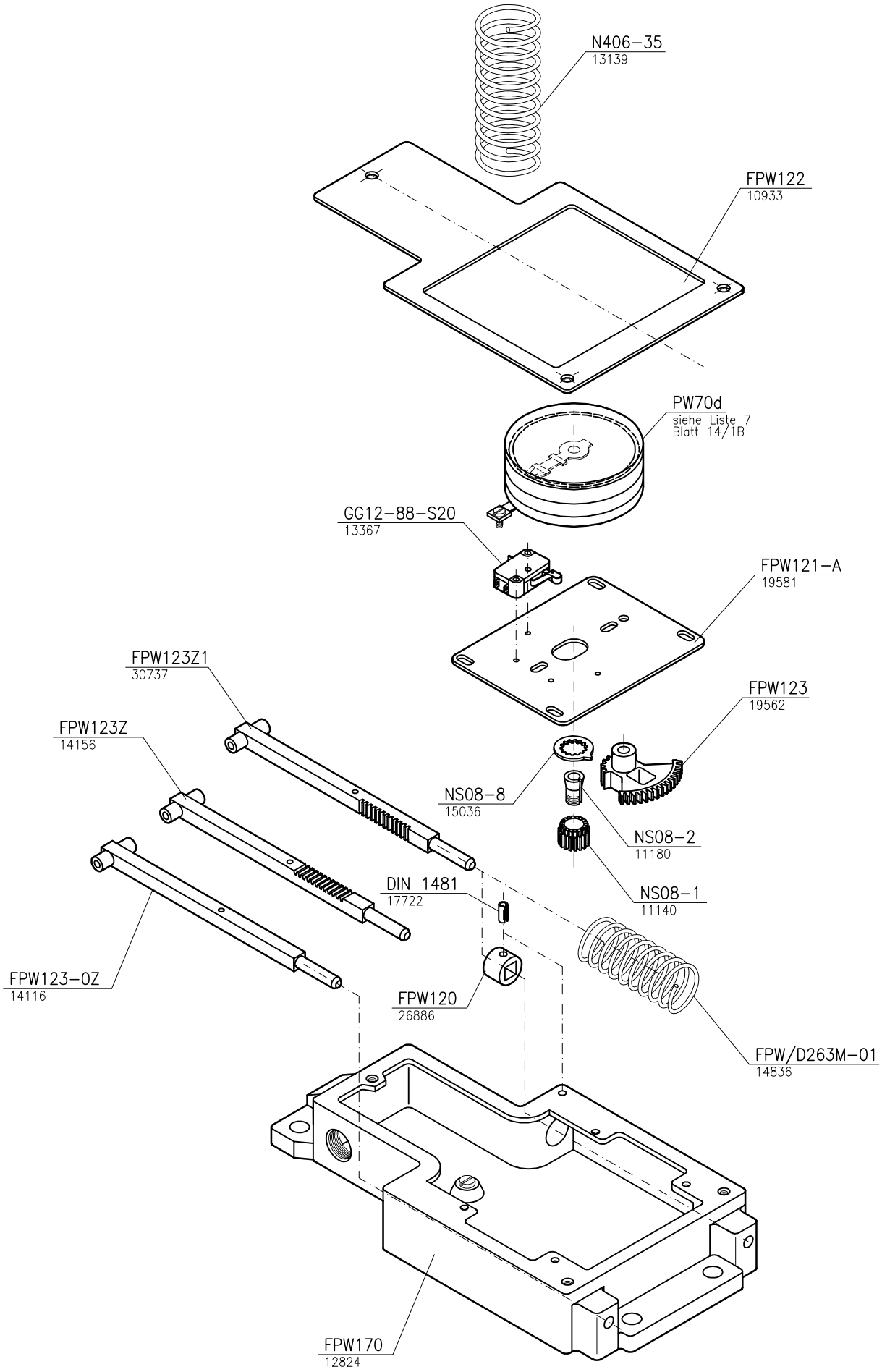

Spohn+Burkhardt
Elektrotechnische Fabrik Blaubeuren

Mauergasse 5
89143 BLAUBEUREN
GERMANY

Tel. +49 7344 171-0 info@spobu.de
Fax +49 7344 171-99 www.spobu.de

Ersatzteile für Fußtaster FPS41

Spare parts foot switch

E 24/2
2014

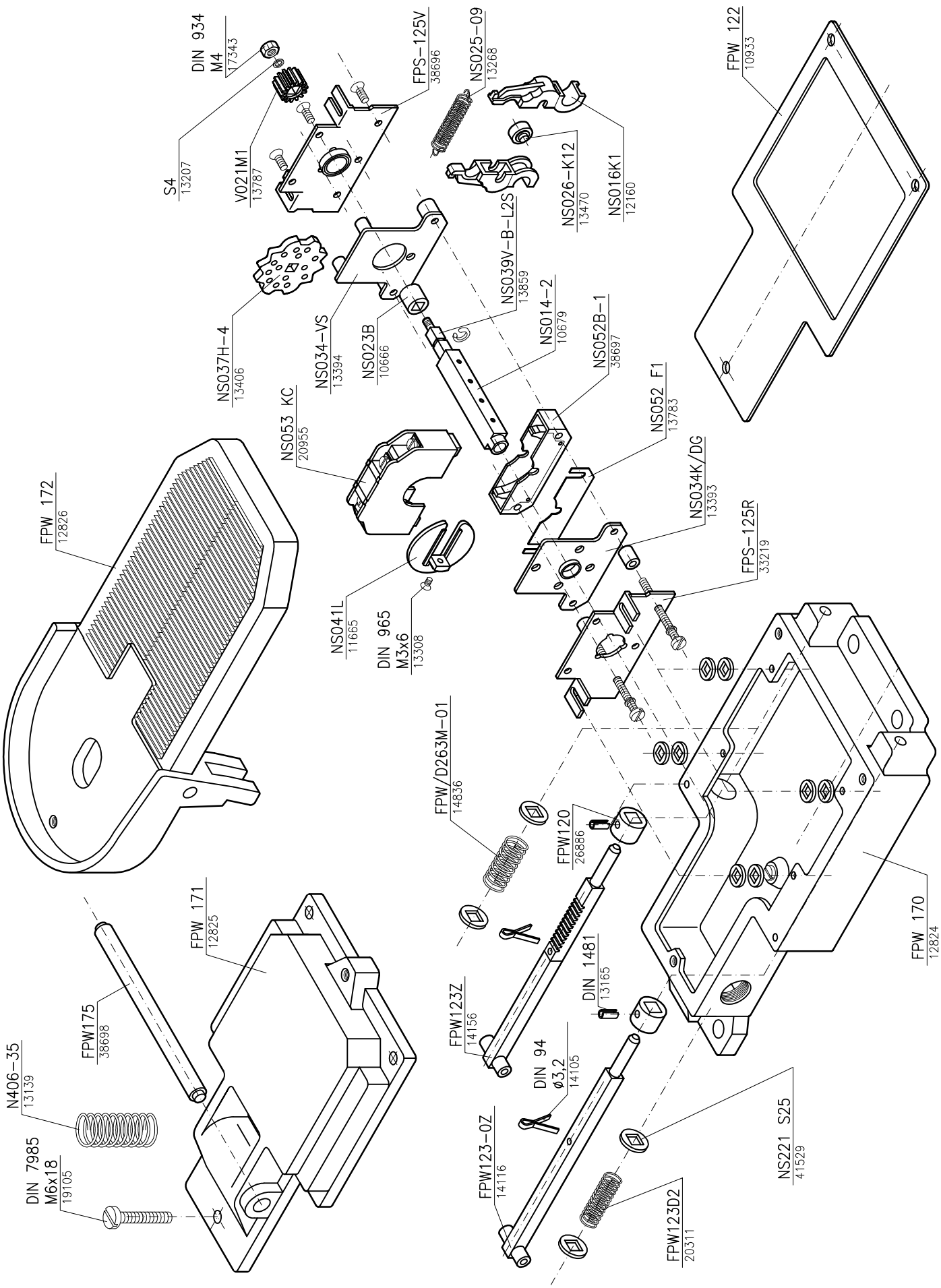

Spohn+Burkhardt
Elektrotechnische Fabrik Blaubeuren

Mauergasse 5
89143 BLAUBEUREN
GERMANY

Tel. +49 7344 171-0 info@spobu.de
Fax +49 7344 171-99 www.spobu.de

Ersatzteile für Oberdeck-Steuersäule Od22

Spare parts for upper deck controller

E 25/1
2014

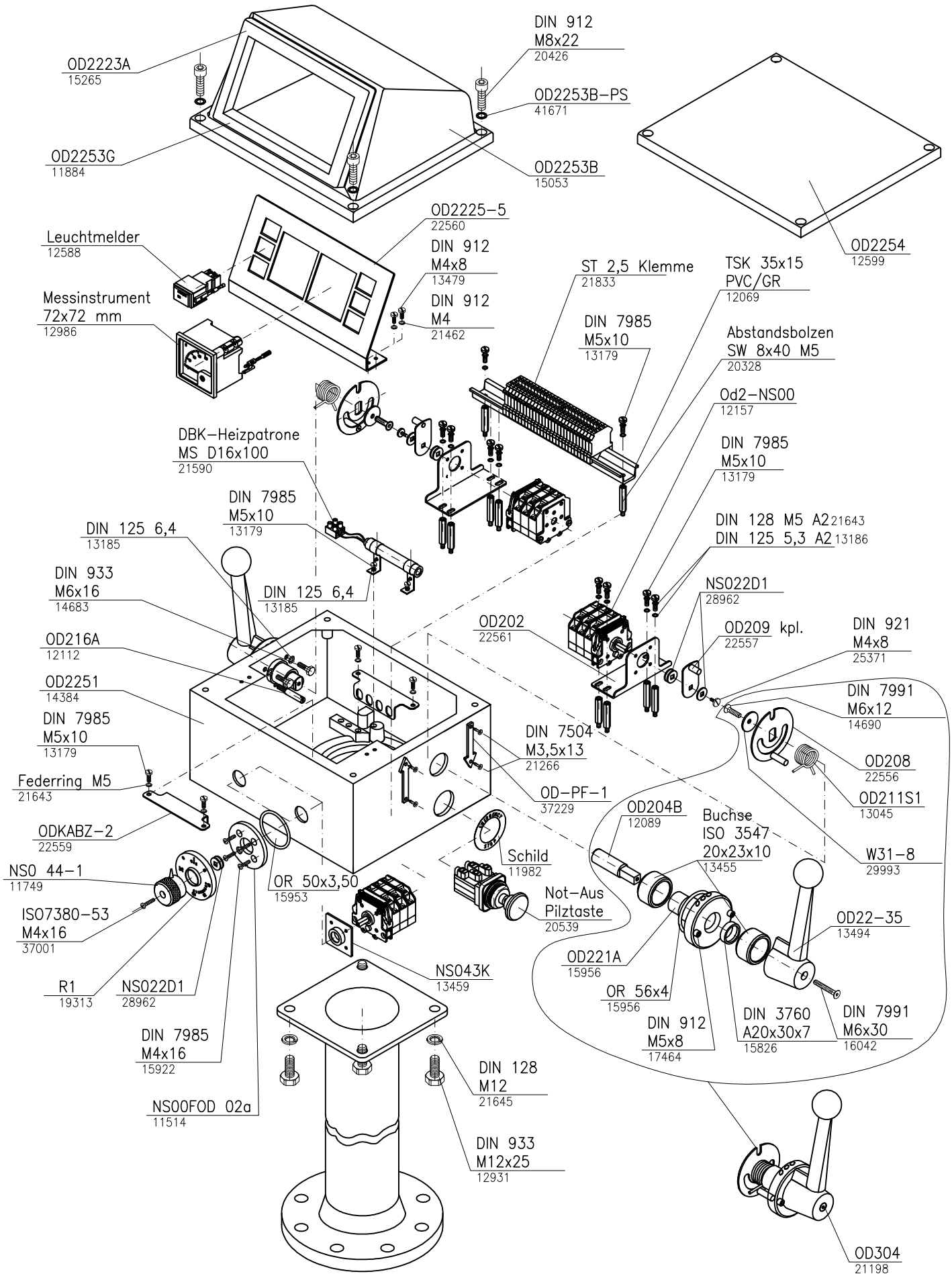

Spohn+Burkhardt
Elektrotechnische Fabrik Blaubeuren

Mauergasse 5
89143 BLAUBEUREN
GERMANY

Tel. +49 7344 171-0 info@spobu.de
Fax +49 7344 171-99 www.spobu.de

Spohn + Burkhardt
Elektrotechnische Fabrik Blaubeuren

E-Liste
Spare Parts

2014

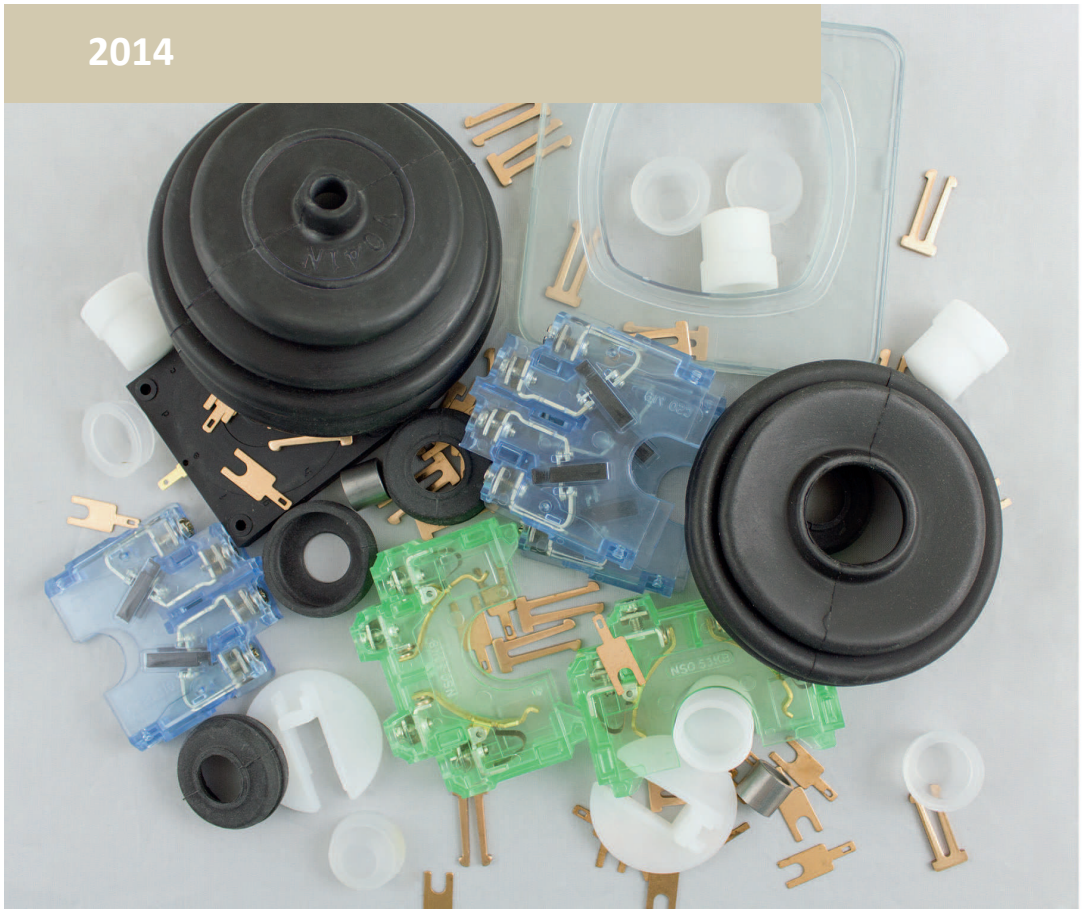

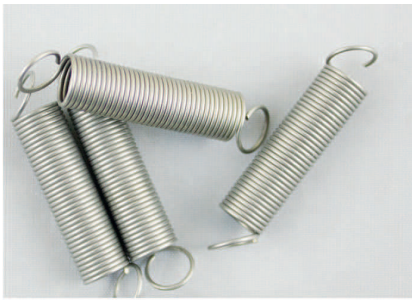

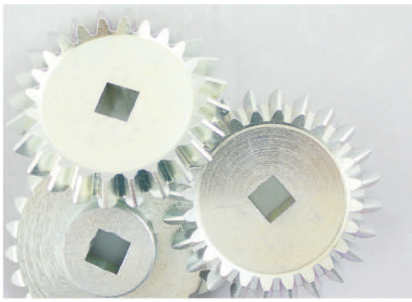

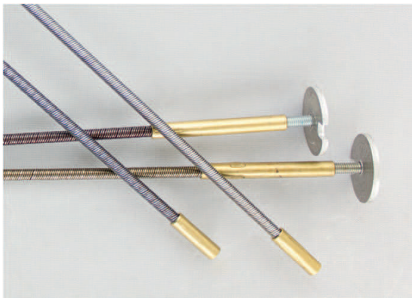

Gußgitter:

WG 5 14093 0,0117 Ω

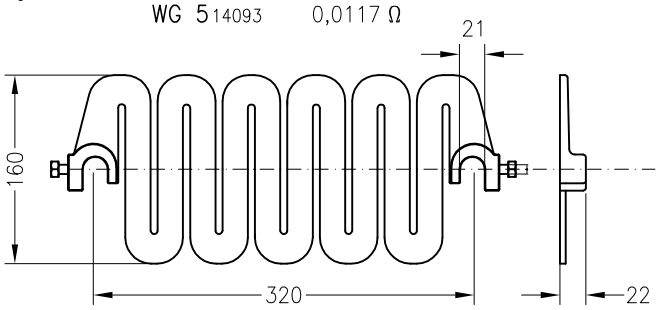

WG 6 14095 0,0185 Ω

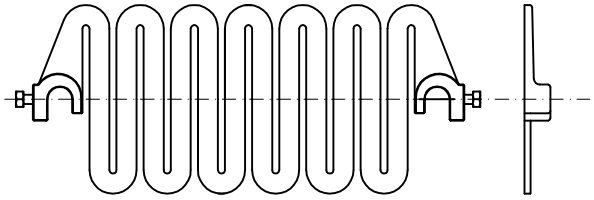

WG 7 14096 0,0285 Ω

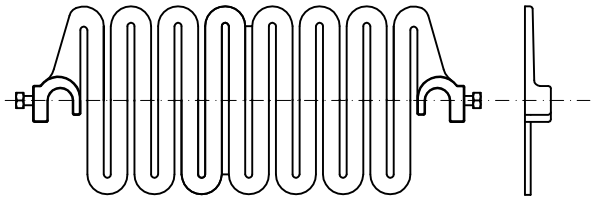

WG 8 14097 0,033 Ω

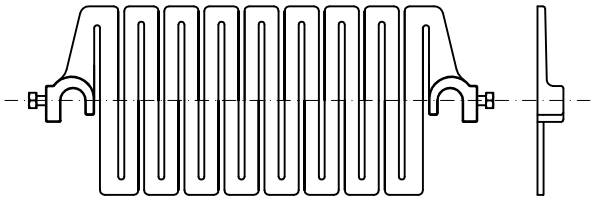

WG 9 24072 0,045 Ω

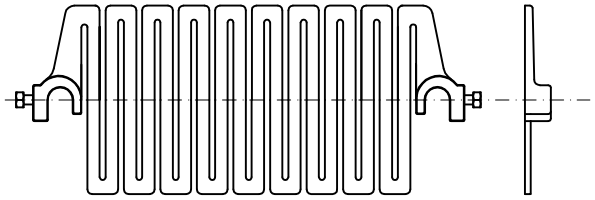

WG 11 38733 0,079 Ω

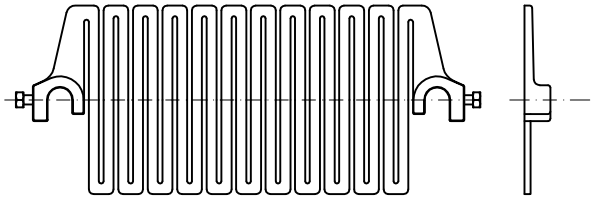

Gewicht: ~1,5 – 1,8 kg/Stück

Gewindestange
bolt

	L1	
WG51–	545	14098
WG51–	690	14099
WG51–	835	14100
WG51–	980	12528

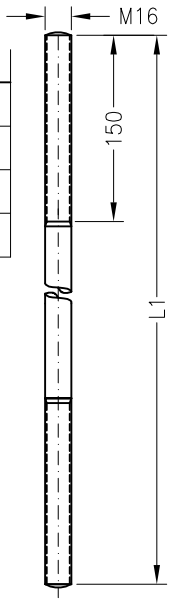

Glimmerrohr WG51 GR1 17640
glimmer hose

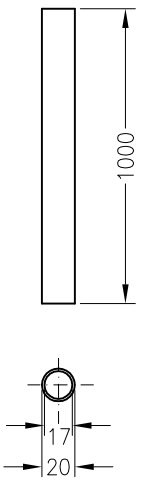

Keramik–Distanzrolle WG31K 17047
ceramic rolle

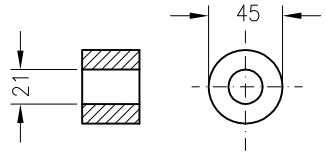

Glimmerscheibe WG31 14102
glimmer disc

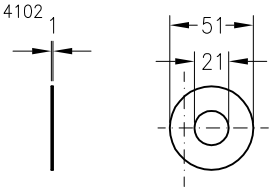

Keramik–Isolator M16 DIN46262 14104
isolator

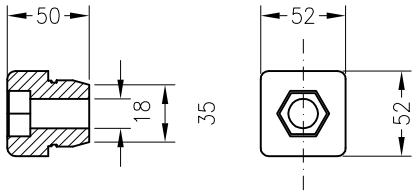

Seegerring
ring

A30 DIN 471 14103
A32 DIN 471 17670
A39 DIN 471 22300

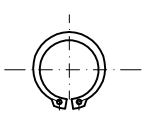

Spohn+Burkhardt
Elektrotechnische Fabrik Blaubeuren

Mauergasse 5
89143 BLAUBEUREN
GERMANY

Tel. +49 7344 171-0 info@spobu.de
Fax +49 7344 171-99 www.spobu.de