REV	DATE	DESCRIPTION	ECN NO.	NAME
A	02.05.06	NEW RELEASE		ERIC

A9001 SERIES MINIATURE PLUG FOR CABLE ASSEMBLY

MATERIAL:

INSULATOR: THERMOPLASTIC (UL94V-0)
INSULATOR COLOR: BLACK
TERMINAL: COPPER ALLOY
TERMINAL PLATED: 40μ"min. Sn/Pb OVER
20μ"min. Ni UNDERPLATED OVERALL

ORDER INFORMATION

A9001- ** P

**:03P ~ 08P

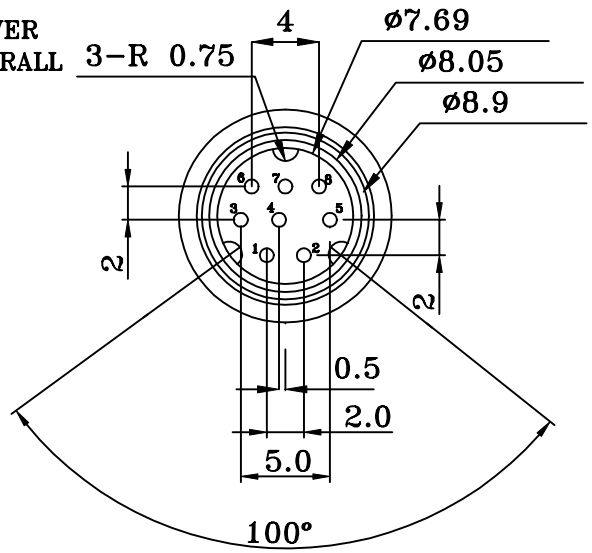

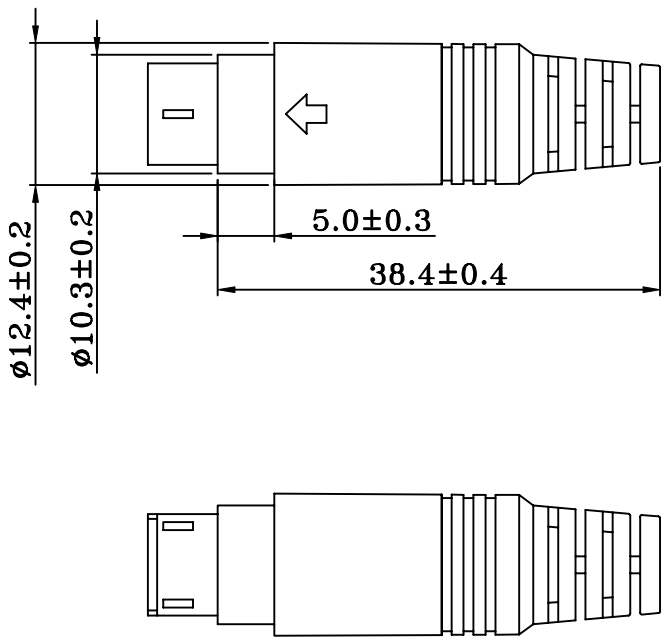

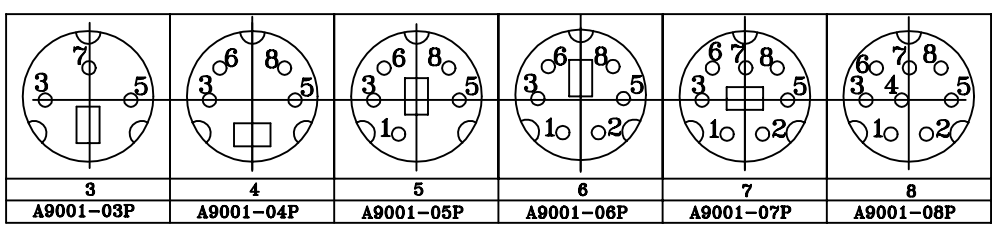

3	4	5	6	7	8
A9001-03P	A9001-04P	A9001-05P	A9001-06P	A9001-07P	A9001-08P

GENERAL TOLERANCE ±0.25mm		PART NO.:	A9001—**P
GENERAL ANGLE TOLERANCE ±3°	DRAWN BY	ERIC (WST)	DRAWING NO. A9001-001
	CHECKED		DRAWING SIZE A3
	APPROVED BY	KEVIN	mm
	SORTING NO.	P1045 (WST)	PAGE 1 OF 1

ISSUED