Autonics

PHOTOELECTRIC SENSOR
BYD SERIES

M A N U A L

Thank you very much for selecting Autonics products.
For your safety, please read the following before using.

■ Caution for your safety

※Please keep these instructions and review them before using this unit.

※Please observe the cautions that follow;

⚠ **Warning** Serious injury may result if instructions are not followed.

⚠ **Caution** Product may be damaged, or injury may result if instructions are not followed.

※The following is an explanation of the symbols used in the operation manual.
⚠:Injury or danger may occur under special conditions.

⚠ Warning

1. **In case of using this unit with machineries(Nuclear power control, medical equipment, vehicle, train, airplane, combustion apparatus, entertainment or safety device etc), it requires installing fail-safe device, or contact us for information on type required.**
   It may result in serious damage, fire or human injury.
2. **Do not disassemble and modify this unit, when it requires. If needs, please contact us.**
   It may give an electric shock and cause a fire.

⚠ Caution

1. **This unit shall not be used outdoors.**
   It might shorten the life cycle of the product or give an electric shock.
2. **Do not use this unit in place where there is flammable or explosive gas.**
   It may cause a fire or explosion.
3. **Please check the polarity of power and wrong wiring.**
   It may result in damage to this unit.
4. **Do not use this unit in place where there is vibration or impact.**
   It may result in damage to this unit.
5. **In cleaning the unit, do not use water or an oil-based detergent.**
   It might cause an electric shock or fire that will result in damage to this product.
6. **Do not short circuit the load.**
   It may result in damage to this unit.

■ Ordering information

BYD 3M – T D T □ – P

Control output		NPN open collector output
	P	PNP open collector output
	T	Built-in timer type
Appearances	1	Emitter
	2	Receiver
		Single body type
Output	T	Solid-state output(TR)
Power supply	D	DC power
Detecting type	T	Through-beam
	D	Diffuse reflective
Detecting distance	M	Unit:m
		Unit:mm
Photoelectric sensor	BYD	Series name

※The above specifications are changeable without notice anytime.

■ Specification

Type	Limited distance reflective		Diffuse reflective	Through-beam	
Model	**BYD30-DDT(-S)** (Note2) **BYD30-DDT-T** (Note1)	**BYD50-DDT(-S)** (Note2) **BYD50-DDT-T** (Note1)	**BYD100-DDT**	NPN output type **BYD3M-TDT**	PNP output type **BYD3M-TDT-P**
Detecting distance	10 to 30mm (50×50mm Non-glossy white paper)	10 to 50mm (50×50mm Non-glossy white paper)	100mm (50×50mm Non-glossy white paper)	3m	
Detecting target	Transparent, Translucent, Opaque materials			Opaque materials of Min. ϕ6mm	
Hysteresis	Max. 10% at detecting distance		Max. 25% at detecting distance	————	
Response time	Operation:Max. 3ms, Return:Max. 100ms(When the timer VR is minimum)		Operation : Max. 3ms, Return : Max. 100ms	Max. 1ms	
Power supply	12-24VDC ±10% (Ripple P-P:Max. 10%)				
Current consumption	Max. 35mA			Max. 30mA	
Light source	Infrared LED(modulated)				
Sensitivity adjustment	————		Adjustable VR	————	
Operation mode	Light ON mode fixed			Dark ON(Light ON:Option)	
Control output	• NPN open collector output ☞ Load voltage : Max. 30VDC, Load current : Max. 50mA, Residual voltage : Max. 1V			• NPN open collector output ☞ Load voltage : Max. 30VDC, Load current : Max. 100mA, Residual voltage : Max. 1V	• PNP open collector output ☞ Output voltage : Min. (Power supply-2.5)V, Load current : Max. 100mA
Protection circuit	Reverse polarity protection, Short-circuit protection				
Timer function	Built-in(OFF delay) delay Time : Max. 0.1 to 2sec(VR adjustable)		————		
Indication	Operation indicator : Red LED				
Connection	Outgoing cable(2m)				
Insulation resistance	Min. 20MΩ(500VDC)				
Noise strength	±240V the square wave noise(pulse width:1㎲) by the noise simulator				
Dielectric strength	1,000VAC 50/60Hz for 1minute				
Vibration	1.5mm amplitude at frequency of 10 to 55Hz in each of X, Y, Z directions for 2 hours				
Shock	500m/s² (50G) in X, Y, Z directions for 3 times				
Ambient illumination	Sunlight : Max. 11,000ℓx, Incandescent lamp : Max. 3,000ℓx				
Ambient temperature	-20 to +65℃(non-freezing condition), Storage : -25 to +70℃				
Ambient humidity	35 to 85%RH, Storage : 35 to 85%RH				
Protection	Standard type : IP64, Built-in timer type : IP50		IP50	IP64	
Material	Case:ABS, Lens:Acryl				
Cable	3P, ϕ4mm, length:2m(Emitter of through-beam type:2P, ϕ4mm, length:2m)				
Accessory	Driver, Mounting bracket A, Bolts/nuts			Mounting bracket A, Bolts/nuts	
Weight	Approx. 70g			Approx. 150g	
Approval	CE				

※(Note1) "-T" : This timer built-in type.
※(Note2) "-S" : Operation indicator is on top.

■ Dimension

●Product

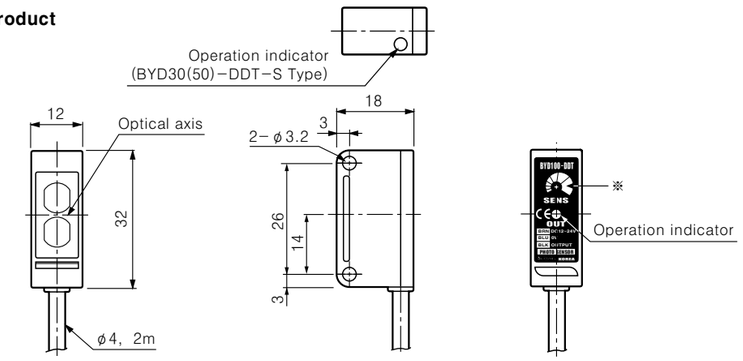

※Built-in timer type : Timer VR, Diffuse reflective type : Sensitivity adjustment VR

●Bracket-A

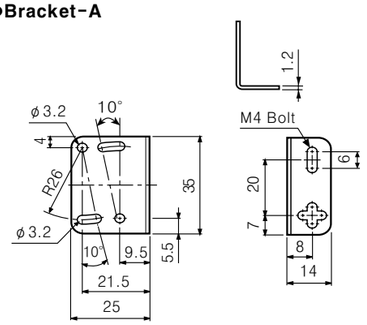

●Bracket-B

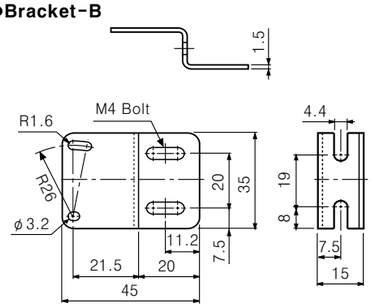

※Bracket-A : Basic specification, Bracket-B : Optional.

(Unit:mm)

●Bracket-A dimension

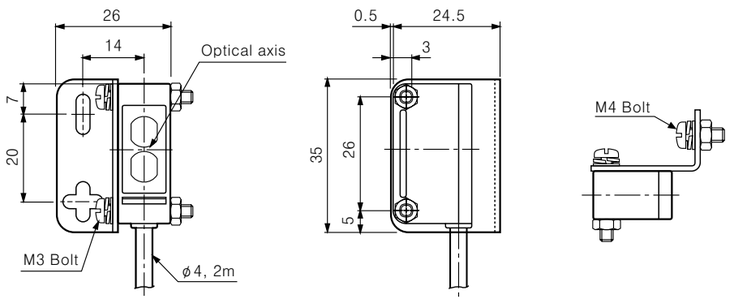

●Bracket-B dimension

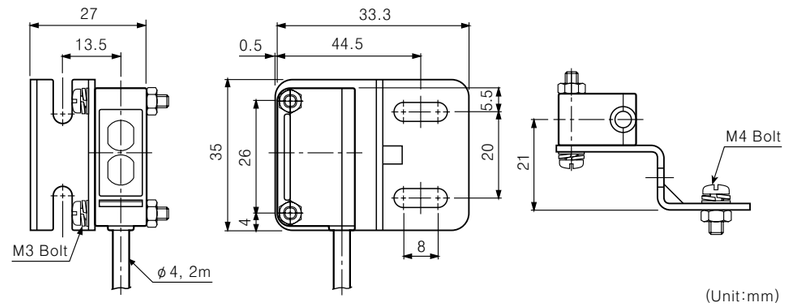

(Unit:mm)

■ Control output circuit diagram

●BYD3M−TDT2

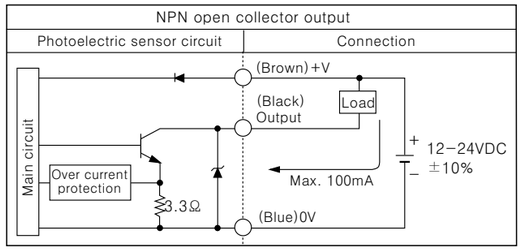

●BYD3M−TDT2−P

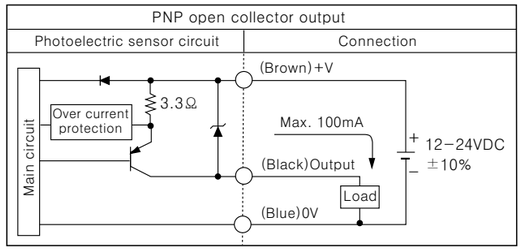

●BYD30−DDT(−S), BYD50−DDT(−S)
●BYD30−DDT−T, BYD50−DDT−T
●BYD100−DDT

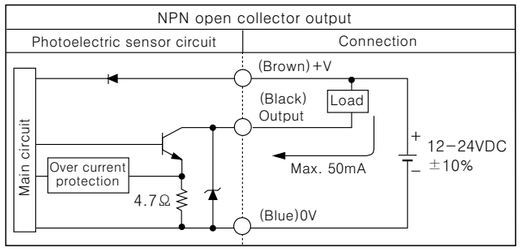

■ Connection

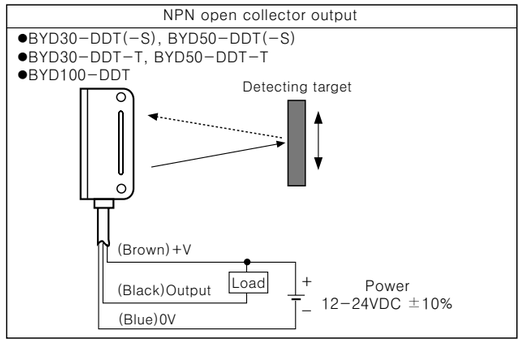

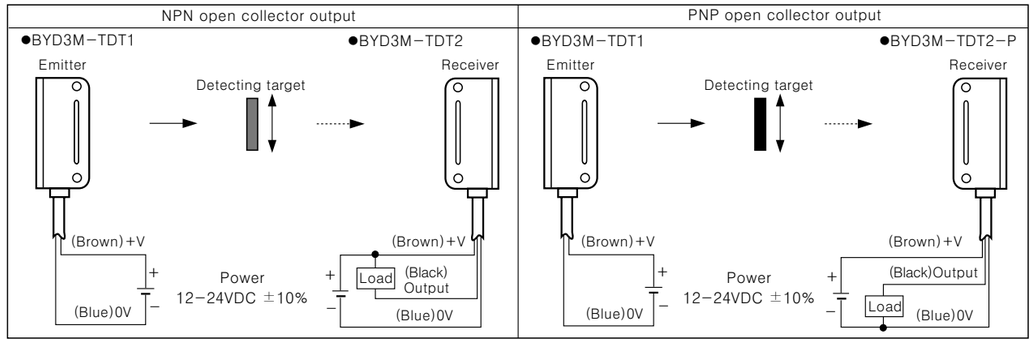

■ Operation mode

Operation mode	Light ON mode
Receiver operation	Received light Interrupted light (Standard) Received light Interrupted light (Built−in timer)
Operation indicator (LED)	ON OFF
Output TR	ON OFF

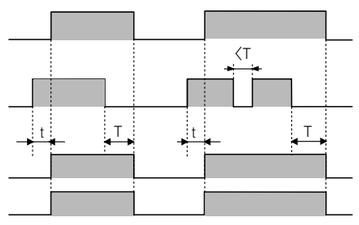

Note)1. T : Setting time by timer VR(0.1 to 2sec)
2. t : Max. 3ms(When the timer VR is minimum)
3. To prevent from the misoperation, output of units keeps the state of OFF for 0.5sec. after power ON.
4. The waveform of output TR and operation indicator are the state of operation for Light ON mode, but in case of Dark ON mode, it is opposite operation against Light ON mode. (BYD3M series:Dark ON mode)
5. If the control output terminal is short−circuited or flow beyond rating current, the control signal will not be output normally due protection circuit.

■ Detecting distance ratio aganist color of a target (Limited distance reflective)

●BYD30-DDT(-T)(-S)

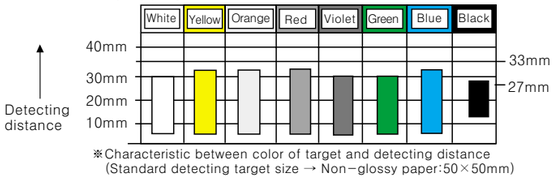

※Characteristic between color of target and detecting distance
(Standard detecting target size → Non−glossy paper:50×50mm)

●BYD50-DDT(-T)(-S)

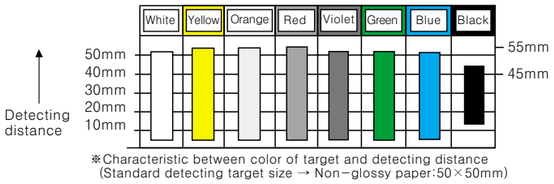

※Characteristic between color of target and detecting distance
(Standard detecting target size → Non−glossy paper:50×50mm)

1. Shall not be influenced by color or material of the target within detecting range specified on catalog.
2. This sensor can detect a target stably because it is not interrupted much against surrounding object.
3. This chart is a charactristic between color of target and detecting distance when the sensor and the reflector are placed in face to face.

※Standard detecting non−glossy paper with color target size :50×50mm

■ Mounting & Adjustment

◎**Through-beam type**

1. Supply the power to the photoelectric sensor, after setting the emitter and the receiver in face to face.
2. Set the receiver in center of position where indicator turns on, as adjusting the receiver and the emitter right and left, up and down.
3. Fix both units tightly after checking that the units detect a target.
   ※If the detecting target is translucent body or smaller than ϕ16mm, it might not detect the target cause light passed.

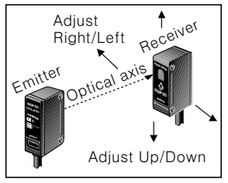

◎**Diffuse reflective type**

1. Even though the diffuse reflective type is set at max. sensitive position, the sensitivity of the sensor must be adjusted in according the existence of the reflective material background.
2. Set the target at a position to be detected by the beam, then turn the adjuster until point ⓐ where the indicator turn on from min. position of the adjuster.
3. Take the target out of the photoelectric sensor, then turn the adjuster until point ⓑ which the indicator turns on, if the indicator does not turn on, max. position point ⓑ.
4. Set the adjuster at the center of two switching point ⓐ, ⓑ.

※The detecting distance indicated on specification chart is against 50×50mm of non−glossy white paper.
Be sure that it can be different by size, surface and gloss of target.

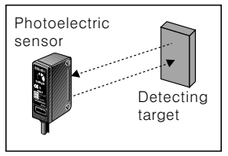

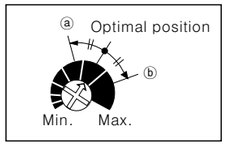

◎**Limited distance reflective type**

1. Supply the power to the sensor after installing the sensor in installation place.

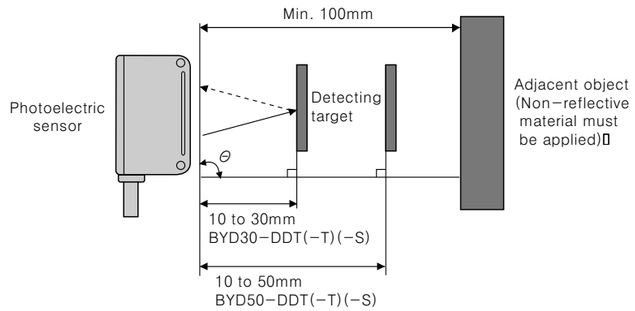

2. Install the target at detecting position and adjust the sensor to the right and the left or up and down to be at the right angle against optical axis and fix it at safe operating positon.
   〈Keep the distance min.10 to max. 30mm for BYD30−DDT(−T) and min. 10 to max. 50mm for BYD50−DDT(−T) between photo−electric sensor and target〉
3. It must be adjusted the sensitivity of the volume in accordance with the existence of the reflective material in background.

※Keep the distance min. 100mm between photoelectric sensor and object in background. It may cause malfunction by reflection light from the other target.
※The detecting distance indicated in the specification chart is that of non−glossy white paper in the target size 50×50mm. The detecting distance may be changed by the size of the target, reflectance of the target.

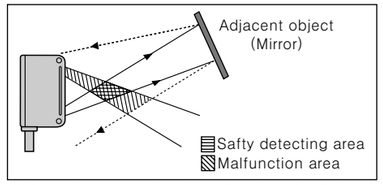

※It can be occurred malfunction by reflected material in the background.

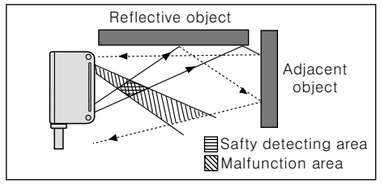

※It may cause malfunction by reflected material near the light beam.

■ Accessory(Option)

●Slit(Model name:BYD3M−Slit)

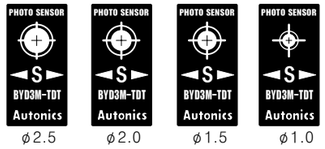

●Min. detecting target and Max. detecting distance by slit's ϕ − When attach the slit at receiver and emitter together.

SLIT ϕ	Min. Size of target	Max. detecting distance
ϕ1.0	Opaque materials of Min. ϕ0.8	500mm
ϕ1.5	Opaque materials of Min. ϕ1.5	700mm
ϕ2.0	Opaque materials of Min. ϕ2.0	1200mm

※This slit is for BYD3M−TDT(−P) only.
※2 pieces of each different ϕ and total 8 pieces packed.
※This slit is sticker for attachment, please remove the dirt on lens of photoelectric sensor before using it.

■ Caution for using

1. Intercept a strong source of light as like sunlight, spotlight within inclination angle range of photoelectric sensor.
2. The photoelectric sensor may cause malfunction under the fluorescent lamp light, so be sure to use cut−off light with panel.
3. When more than 2 sets of Through−beam type sensor are used closely, it might cause interference each other. Be sure to put enough space between them in order to avoid malfunction.
4. When more than 2 sets of diffuse reflection types are installed adjacently, it can be occurred malfunction by light beam from the other target. So it must be installed at an enough interval.
5. If photoelectric sensor is installed at flat part, it might cause malfunction by reflection light from flat part. Be sure to put space between photoelectric sensor and ground.
6. When wire the photoelectric sensor with high voltage line, power line in the same conduit, it may cause malfunction or mechanical trouble. Therefore please wire seperately or use different conduit.
7. Avoid installing the unit as following place.
   Corrosive gas, oil or dust, strong flux, noise, sunlight, strong alkali, acid.
8. In case of connect DC relay as inductive load to output, please remove surges by using diode or varistor.
9. The photoelectric sensor cable shall be used as short as possible, because it may cause malfunction by noise through the cable.
10. When it is stained by dirt at lens, please clean the lens with dry cloth, but don't use an organic materials such as alkali acid, chromic acid.
11. When use switching power supply as the source of supplying power, F.G terminal shall be good earth ground and condenser for removing noise shall be installed between 0V and F.G terminal.

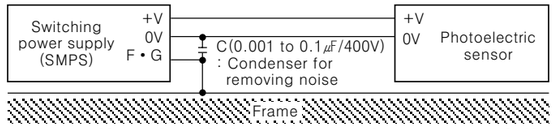

※It may cause malfunction if above instructions are not followed.

■ Main products

■ COUNTER
■ TIMER
■ TEMPERATURE CONTROLLER
■ PANEL METER
■ TACHOMETER
■ LINE SPEED METER
■ DISPLAY UNIT
■ PROXIMITY SWITCH
■ PHOTOELECTRIC SENSOR
■ FIBER OPTIC SENSOR
■ PRESSURE SENSOR
■ ROTARY ENCODER
■ SENSOR CONTROLLER
■ POWER CONTROLLER
■ STEPPING MOTOR & DRIVER & CONTROLLER

Autonics Corporation
http://www.autonics.net

■HEAD QUARTER :
41−5, Yongdang−Ri, Ungsang−Up, Yangsan−Shi, Kyung−Nam, Korea 626−847.
■TRADE DEPARTMENT :
511 Ansung B/D, 410−13, Shindolim−Dong, Kuro−Gu, Seoul, Korea 152−070
TEL:82−2−679−6585 / FAX:82−2−679−6556
■E−mail : sales@autonics.net

NO20020618−EP−KE−08−0130D